SUPERLOK®

Instrumentation/Electrical Total Solution Provider **BMT**

Valve & Fitting Series

BMT Co., Ltd.

www.superlok.com

SUPERLOK®

SUPERLOK FITTINGS

Supplied to ConocoPhillips, Pertamina, Qatar Petroleum, Eskom, Keppel FELS, Mitsubishi, Saipem, SK E&C, HDEC, GS E&C and other customers

SUPERLOK VALVES

Supplied to Sarawak Shell, Petrobras, Petronas, Seadrill, New Field, MMHI, SHI, DSME and other customers

Electric Distribution Panel

Saudi Arabia Aramco Shaybah #4 (IPR Panel)
- *Saudi Arabia Sabic Elastomers*
- *Qatar QP GDS SCADA Up-Grade*
- *Kuwait KPPC Aromatics Complex*

- *Turkey Tufanbeyli Thermal Power Plant*
- *Panama PACO Power Plant*

- *Singapore Jurong Aromatics Complex*

- *Nuclear power plant, Thermal power plant and 6 major power plants in Korea*
- *Gwangju NCIA(National Computing Information Agency)*
- *KT communication base station*
- *Korea Expressway Corporation Public Procurement Service / KRISS*
- *Korea Forest Service / Defense Agency for Technology and Quality (DTaQ) / Rural Development Administration*

Instrumentation/Electrical Total Solution Provider

BMT

SEMS(Smart-eye Monitoring System)

- *Korea map communications satellite control center in Dok-do island (SE distribution panel)*
- *Samsung Electronics' computing information center of material R&D complex (SE distribution panel)*
- *Samchunpo, Ulsan and Hadong thermoelectric power plant (EHT SE distribution panel)*
- *Busan Natural Gas Development Center (Lightig SE distribution panel)*
- *LG U PLUS Gasan center (SEMS)*
- *Gimhae City office (BEMS Building Energy Management System)*
- *JHP (SEMS)*

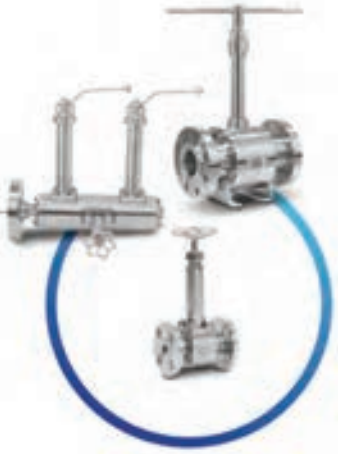

Cryogenic Valves

Supplied to DSEC, SHINHAN MACHINERY

i-Lok(i-Fitting)

Guarantee of perfect installation Easily installed even by non-skilled worker. Sharply increasing demands by world-wide customers

Technology of anti-corrosion ferrule

Unique design of back ferrule provides best sealing and superior corrosion resistance in severe industries like off-shore, deep sea, high pressure and others

BMT Co., Ltd.

The Best Manufacturer for Tomorrow

INDEX

BMT Information

SUPERLOK Tube & Pipe Fittings

SUPERLOK T&S Valve Series

Valves P371

Others & Accessories

Others P445

"Best Manufacturer For Tomorrow"

Head Office & First Factory

-Instrumentation Tube Fittings & Valves
-Semiconductor & High Purity Products

Second Factory

Valve Center

Cryogenic Valves, DBB Valves,
Globe Valves, Gate Valves, Ball Valves

Electric Center

Switch Distribution Board
Power & Lighting Distribution Panel
Motor Control Center
Molded Case Power Distributor (MCPD)

We Service
Total Solution

BMT Co.,Ltd.

is a leading manufacturer of Electrical & Instrumentation components and systems, providing with adequate technical solution to various customers in Oil & Gas, Petrochemical, Shipbuilding & Power Industry. With the high level of system management in accordance with international standard such as ISO 9001, ISO 14001, OHSAS 18001, ASME, API, CE & KEPIC, we assure to supply more reliable products and services. Furthermore constant investment on research & development become our global competitiveness.

We, BMT Co.,Ltd,

promise to create your value with satisfaction.

"By achieving global competitiveness, we will become the world's best technological company"

Introduction & Preparant (1988 - 2003)

Designated as a Official Vendor in Supplying Tube Fittings and Valves by Samsung Electronics.

Selected as a "New Technology Venture Business "by Small and Medium Biz Administration[SMBA]

Selected as a "Superior Technology Co. "by Korea Technology Credit Guarantee Fund[KOTEC]

Accumulation & Diversification (2004 - 2006)

ABS[American Bureau of Shipping]
Lloyd[Lloyds Tegister of Shipping]
DNV[Det Norske Veritas/Norwegian Assoc.]
Awarded 3 Million dollars Exporting Tower
Registered as an official Supplier in EWP
Established an R&D Institute.
Awarded The Grand Prix of the Busan Enterprises in the Technical Field.
Made a manager contrace with Dong Yang Securities Co. regarding IPO.
Registered a Patent and a Design of MCPD
[Molded Case Power Distributor]and began an Electric business.

Selected as a "Promising Company"by an Industrial Bank of Korea
Confirmed as a "Materials and Components Professional Comp."
Confirmed as a "Innovation Business Company"by SMBA
Designated as a "Superior Exporting Firm"by SMBA

Expanding&Globalization (2007 - 2015)

OHSMS 18001[HSBRSK-S015
ISO 14001[HSBRSK-E118:Environmental Management System Certificate]
GL[Germanischer Lloyd]
API[American PetroleumInstitute]
Undergoing–ASME[American Society of Mechanical Engineers]N Stamp
Certified the Q-Class of Quality from KHNP (Korea Hydro & Nuclear Power)
in supplying Finished Products to the nuclear power plants under operation

Approved as a vendor from ConocoPhillips Indonesia for SUPERLOK products
Acquired Gost-R certificate
Acquired CNG certificate of SUPERLOK Tube Fitting from TUV NORD
Approved as the vendor at ESKOM in South Africa (Fittings & Valves)
Moved to New Site Area in Yangsan TOTAL SITE AREA : 19,596.00㎡

High Quality Products








Certifications

<Instrumentation Fitting & valve DIV. >

- ABS (American Bureau of Shipping) | Lloyd (Lloyd's Register of Shipping)
- DNV (Det Norske Verita/Norwegian Assoc.) | GL (Germanischer Lloyd)
- BV(Bureau Veritas) | API (American Petroleum Institute)
- KEPIC (Korea Electric Power Industry Code)
- ISO 9001 (Quality Management Syatem)
- ISO 14001 (Environmental Management System)
- OHSMS 18001 (Occupational Health and Safety Management System)
- PED(Pressure Equipment Directive) | PED (Pressure Equipment Directive)
- Acquired the Nippon Kaiji Kyokai Certificate for Approval Mechanical Joint.
- Acquired Q-Class Certificate of KHNP's Qualified Supplier (KHNP : Korea Hydro & Nuclear Power Co.,Ltd).

<Electrical Distribution Board (MCPD) DIV. >

- Reliability Test passed by Korea Electrotechnology Research Institute (KERI)
- NEP (New Excellent Product) mark acquired by Ministry of Trade, Industry and Energy Republic of Korea
- Designated as Electricity new technology by Ministry of Trade, Industry and Energy Republic of Korea
- Test Certificates of Korea ElectroTechnology Research Institute
- Acquired V-CHECK mark from KESCO (Korea Electrical Safety Corporation)
- Acquired KEMA (Keuring van Elektrotechnische Materialen te Arnhem) of Netherlands | Acquired CE Test Mark

Awards and Qualifications

- Awarded grand prize for "4th MAEKYUNG's Superior Venture Company" for manufacturing and service field
- Awarded a letter of commendation from the chairman of Small and Medium Business Administration (SMBA)
- 2004 Prime Minister Citation for Exemplary Entrepreneur
- Certified an "Innovation Business Company" by Government
- Awarded "The Grand Prix of the Busan Enterprises" in the Technical Field in year 2005
- Designated as a "Clean Company" by Ministry of Labor
- Designated as a "New Technology Venture Business" by Small and Medium Business Administration (SMBA)
- Designated as a "Superior Technology Company" by Korea Technology Credit Guarantee Fund (KOTEC)
- Accredited as a "Promising Company" by an Industrial bank of Korea (KIUP)
- Designated as a "INNO-BIZ" company by Small and Medium Business Administration (SMBA)
- Superior Exporting Firm (SMBA)
- Excellence Quality Company 2006 (MCIE)
- MAINBIZ Company (S&MBA) (MAINBIZ: Management Innovation Business)
- Awarded "Suktap Industrial Medal" from Government in year 2008
- Awarded "5 Million USD Export Prize" from Government in year 2008

Supply Record

Oil & Gas

Project Name	Owner	Client	Product	Site	Year
Jurong Refinery Expansion	CHEVRON	FOSTER WHEELER	Tube Fitting	SINGAPORE	2012
P-61 Platform	PETROBRAS	FLOATEC	Instrument Air Manifold Instrument Valve and Manifold	BRAZIL	2012
Hai Thach FSO	PETRO-VIETNAM	NOV	Double Block & Bleed Valve Flanged Ball Valve	VIETNAM	2012
Mehar Gas Development	PETRONAS	SPEC	Tube Fitting Double Block & Bleed Valve Single Block & Bleed Valve Instrument Valve and Manifold	PAKISTAN	2012
New Booster Station 160	KUWAIT OIL COMPANY	ENI-SAIPEM	Tube Fitting Instrument Valve Tube, Pipe, Flange	KUWAIT	2011
Arabian Chlor Vinyl(CA/EDC) Plant	SAHARA ACVC	DAELIM	Instrument Air Manifold	SAUDI ARABIA	2011
E8K & F13K Compression	SHELL	WORLEY PARSONS	Double Block & Bleed Valve Fugitive Emission	MALAYSIA	2011
Ammonia / Urea Expansion Project	FERTIL	SAMSUNG HEAVY INDUSTRIES	Tube Fitting, Pipe Fitting	U.A.E	2011
F6 REJUV	SHELL	KENCANA PETROLEUM	Double Block & Bleed Valve	MALAYSIA	2010
KNPBG-B	PETRONAS	MMHE	Double Block & Bleed Valve Fugitive Emission	MALAYSIA	2010
3 years Price Agreement	CONOCO PHILLIPS	N/A	Tube Fitting, Pipe Fitting	INDONESIA	2009
CLOV FPSO	TOTAL	DAEWOO SHIPBUILDING & MARINE ENGINEERING	Double Block & Bleed Valve Instrument Valve and Manifold	ANGOLA	2009
Cili Padi gas field Development	SHELL	TECHNIP	Double Block & Bleed Valve Chemical Injection/Sampling Probe	MALAYSIA	2009
PAZFLOR FPSO	TOTAL	DAEWOO SHIPBUILDING & MARINE ENGINEERING	Instrument Valve and Manifold	ANGOLA	2008
Umm Sharif Field Development	ADMA-OPCO	HYUNDAI HEAVY INDUSTRIES	Tube Fitting, Instrument Valve Braket, Clamp	U.A.E	2007

Power Plant

Project Name	Owner	Client	Product	Site	Year
Duvha Power Station	ESKOM	SIEMENS	Superlok i-Lok(i-Fitting)	SOUTH AFRICA	2012
Mong Dung Power Plant	EVN	DOOSAN HEAVY INDUSTRIES	Tube Fitting, Pipe Fitting	SAUDI ARABIA	2012
Rabigh Power Plant	SAUDI ELECTRICITY	DOOSAN HEAVY INDUSTRIES	Tube Fitting, Pipe Fitting	SAUDI ARABIA	2012
Sohar 2 & Barka III IPP	OMAN POWER AND WATER PROCUREMENT	GS E&C	Tube Fitting, Tube	OMAN	2012
Medupi Power Station	ESKOM	KENTZ ENGINEERS & CONSTRUCTORS	Tube Fitting	SOUTH AFRICA	2011
Shuaibah IWPP Expansion	SAUDI ELECTRICITY	DOOSAN HEAVY INDUSTRIES	Tube Fitting, Pipe Fitting, Flange	SAUDI ARABIA	2011
Marafiq IWPP	MARAFIQ	DOOSAN HEAVY INDUSTRIES	Tube Fitting, Pipe Fitting	SAUDI ARABIA	2010
Jebel Ali M Station		HYUNDAI HEAVY INDUSTRIES	Tube Fitting	U.A.E	2009

Nuclear Power Plant

Project Name	Owner	Client	Product	Site	Year
Braka Nuclear Power Plant		DOOSAN HEAVY INDUSTRIES	Tube Fitting	U.A.E	2012
China AP-1000	CNNC	WESTINGHOUSE	Tube Fitting	CHINA	2012
Ul-Jin #1 & 2	KHNP	DOOSAN HEAVY INDUSTRIES	Tube Fitting, Tube, Pipe	KOREA	2011
New Gori #3 & 4	KHNP	DOOSAN HEAVY INDUSTRIES SAMSUNG HEAVY INDUSTRIES	Tube Fitting, Tube, Pipe	KOREA	2011
New Wolsong # 1 & 2	KHNP	HYUNDAI HEAVY INDUSTRIES	Tube Fitting, Instrument Valve Tube, Pipe	KOREA	2011
Wolsong Wast Treatment	KHNP	DAEWOO SHIPBUILDING & MARINE ENGINEERING	Tube Fitting, Tube, Pipe	KOREA	2010

Shipbuilding

Project Name	Owner	Client	Product	Site	Year
LPG TANKER (HHI2515)	SK SHIPPING	HYUNDAI HEAVY INDUSTRIES	Forged Fitting	NORWAY	2012
Ddrill Ship TBN	ROMAN COMPANIES	HYUNDAI HEAVY INDUSTRIES	Pipe Fitting	U.S.A	2012
BARGE HD2500	HYUNDAI HEAVY INDUSTRIES	HYUNDAI HEAVY INDUSTRIES	Hydraulic Fitting	NORWAY	2012
NOCC OCEANIC TRIAL	NOCC	HYUNDAI HEAVY INDUSTRIES	Pipe Fitting	NORWAY	2012
Perusahaan Gas Negara FSRU	HOEGH LNG	HYUNDAI HEAVY INDUSTRIES	Pipe Fitting	INDONESIA	2012
AB Klaipedos Nafta FSRU	HOEGH LNG	HYUNDAI HEAVY INDUSTRIES	Pipe Fitting	LITHUANIA	2012
GOLIAT FPSO	ENI - NORGE	HYUNDAI HEAVY INDUSTRIES	TITANIUM Fitting	NORWAY	2012
Semi Submersible Rig (HHI2546)	FRED. OLSEN ENERGY ASA	HYUNDAI HEAVY INDUSTRIES	DIN Tube Fitting	NORWAY	2012
Drill Ship (HHI2503)	DIAMOND OFFSHORE	HYUNDAI HEAVY INDUSTRIES	Tube Fitting	U.S.A	2012
LNG Carriers 155,000CBM/ 160,000CBM (HHI2556, 2557, 2580)	DYNAGAS	HYUNDAI HEAVY INDUSTRIES	Tube Fitting	GREECE	2012
Drill Ship (HHI2505, 2506, 2507)	NOBLE	HYUNDAI HEAVY INDUSTRIES	DIN Tube Fitting	GREECE	2012
MAERSK Drill Ship # 1~4	MAERSK	SAMSUNG HEAVY INDUSTRIES	Flanged Ball Valve Tube Fitting Instrument Valve and Manifold SAE Flange	VARIOUS	2012
SEADRILL # 4 & 5	SEADRILL	SAMSUNG HEAVY INDUSTRIES	Flanged Ball Valve DIN Tube Fitting Instrument Valve and Manifold SAE Flange	VARIOUS	2012
ETESCO – PETROBRAS	ETESCO	SAMSUNG HEAVY INDUSTRIES	DIN Tube Fitting, Flange	BRAZIL	2012
Jack & St. Malo Drill Ship	CHEVRON	SAMSUNG HEAVY INDUSTRIES	Flange	MEXICO	2011
Oddebrecht Drillship # 1 & 2	ODEBRECHT	DOOSAN HEAVY INDUSTRIES SAMSUNG HEAVY INDUSTRIES	Tube Fitting, Forged Fitting Instrument Valve and Manifold Flange	USA	2011
GVA 7,500 SEMI RIG	R.S.A. DE C.V	DOOSAN HEAVY INDUSTRIES SAMSUNG HEAVY INDUSTRIES	Tube Fitting, Forged Fitting Instrument Valve and Manifold Flange	MEXICO	2011
TMT Drillship #1	MADARIN DRILLING CO.	DOOSAN HEAVY INDUSTRIES SAMSUNG HEAVY INDUSTRIES	Tube Fitting, Forged Fitting Instrument Valve and Manifold Flange	MARSHALL IS.	2010
3 years Price Agreement	KEPPEL FELS	N/A	Tube Fitting	SINGAPORE	2009

World-wide Service Network

Asia & Oceania

Country	Agency	Address	Web Mail
Singapore	BMT SUPERLOK ASIA PTE LTD	35 Kian Tech Dive Singapore 628 851	wongcy@liqgas.com
Malaysia	W-LIQGAS TECHNOLOGY SDN BHD	No 80-G Bayan Bay Persiaran Bayan Indah 11900 Bayan Lepas Penang Malaysia	wongcy@liqgas.com
	REGALTECH (M) SDN. BHD.	No. 25,Jln Suria Puchong 2, Puchong Gateway, 47110 Puchong, Selangor	marketing-1@regaltech.com.my
Thailand	PNEUMAX CO.,LTD	107/1 Moo 8 Chaloem Phrakiat R.9.Rd., Pravet Bangkok 10250	Sales.acr@pneumax.co.th
Vietnam	PACIFIC OCEAN SEAWAY SERVICE & TECHNIQUE CORP.	31 Tran Quy Khoach Str., dist1 HCMC Vietnam	nghiatran@pacitech.com.vn
Indonesia	PT KAHANA	Perkantoran PT. INTI Gedung I Jl Mohamad Toha No 77 Bandung 40253 Indonesia	sales@superlokindonesia.co.id
	DELTA JAYA ENGINEERING	JL. Jawa 116,118, Wadungasih, Buduran, Sidoarjo, Jawa Timur, Indonesia	mail@delta-jaya.com
Japan	TOAFLEX CO.,LTD	6-11 1-chome Kujyo Nishi-Ku Osaka Japan	info@toaflex.co.jp
China	BEIJING SVF MICRO-ELECTRONICS SYSTEMS CO.,LTD	Maizhuang Xignshou town Changping dist Beijing China	svfcorp@yahoo.com.cn
	SHANGHAI HAOWEI MACHENICAL	Rm 521 No 1728 Yishan road (Hotel Carolina) Shanghai 201 103 China	haowei_shanghai@vip.163.com
Taiwan	GOLD STONE DEVELOPMENT CO., LTD	Fl-2 No 164 Keelung Rd. SEC 2 Taipei Taiwan	gs06@ms16.himet.net
Hong Kong	E-REACH	Rm 806 8/F Ricky CTR 36 Chong Yip Street Ngau Tau Kok KLN Hong Kong	xiang_xue@echromtek.com
Australia	PROCESS VALVES & FITTINGS	18 Tower Court Noble Park Victoria 3174 Melbourne Australia	sales@ifsvic.com.au

Middle-East

Country	Agency	Address	Web Mail
UAE	IDS ENERGY	P.O. Box 1079 Dubai UAE	habib.mikati@ids-energy.com
		Abu Dhabi-Tourist club Area Makeen Tower Suite 1901 P.O. Box 43044	shadi.sadeghiani@ids-energy.com
Kuwait	GLOBAL INTERNATIONAL	Shop No 39,40,41,42 Ahmadi Industrial Area P. O. Box 55887, 54569 Sabahiya Kuwait	global@globalintl.com
Iran	IPETROL L.L.C (IPL CO.)	#9, 23/33 David Anhaght Ave. 0069, Yerevan, Armenia.	bitarafan@ipetrol.net
	IRAN OFFICE	#273 First Floor, Dastgerdi, St(Zafar), Africa Blv. Tehra, Iran	dustin@advancedenergy.co.kr
Pakistan	AL-AZEEM INTERNATIONAL	Offices #24F-A &24F-B Saeed Tower Abdullah Market Shahdara Mor-Lah Pakistan	faisal@alazeemintl.com
Turkey	TEKNOSER	Mescit Mah Ataturk Cad Birmes Senayi Sitesi A10Blok No 3 Tuzla-Istanbul	adnan@teknoserhidrolik.com.tr

Africa

Country	Agency	Address	Web Mail
South Africa	SUPERLOK(AFRICA) (PTY)LTD VALVE & FITTING SUPPLIES	36 Poterfield Road Table View Cape Town South Africa	bob@superlok.co.za
Egypt	AL AHRAM FOR FACTORIES REQUIREMENTS	58 El Sabtia Street Cairo Egypt	ahram@link.net
Nigeria	JEVANT SPENCER INTL CO. LTD	Vicon Plaza 80, Liberation Stadium Road Gra Phase Iv Port Harcourt Rivers	info@jevantspencer.com

Europe

Country	Agency	Address	Web Mail
UK	STAUFF UK LTD.	500 Carlisl Street East Sheffield S4 8BS UK	sales@stauff.co.uk
Russia	GAS SYSTEMS OJSC	Office 305, 23/8, Elektrozavodskaya St. Moscow, 107023 Russia	Sorokin@gassys.ru
Netherlands	SETI BV	Witte Paal 175 1742 NX Schagen The Netherlands des Fontaines ZI Bernin 38190 CROLLES	seri@planet.nl
Norway	SUPERLOK SCANDINAVIA A.S	Lyngneset 53 5410 Sagvåg Norway	Frode@superlok.no
Spain	TEKMA FLUID, S.L.	Novell 86 Bajos Derecha Barcelona 08014 Espana	tekmafluid@tekmafluid.com
Czech	VENTILE & FITTINGS PRAHA SPOL. S R.O.	Družstevní 72 250 65 Líbeznice Czech republic	ventile@ventile.cz
Poland	FST POLSKA SP. Z O.O.	ul. Szczęśliwa 38A/1 53-418 Wrocław	ventile@ventile.cz
Italy	FTI S.R.L.	Via Briantea 58 20063 Cernusco sul Naviglio (MI)	info@ftisrl.it

North-America

Country	Agency	Address	Web Mail
USA	STAINLESS HOSE FITTING LTD.	8103 Rd Bluff Road Pasadena TX 77507	info@stainlesshosefittings.com
	SUPERLOK USA	5757 Olivas Park Dr. #H Ventura CA 93003	mmclau5474@aol.com
	MAKO PRODUCTION PRODUCTS	408 Wimbledon Road, Edmond, OK 73003 USA	thad@mako-products.net
Canada	UNIFIED VALVE GROUP OF COMPANIES	# 4, 12181-44 Street S.E. Calgary, AB Canada T2Z 4H3	vince@wgiltd.com
Mexico	COFLI TUBE FITTINGS MEXICO S.A DE C.V.	Av. Rio Consulado 3422, La Joya Mexico D.F. 07890	edgar@texasss.com

Latin-America

Country	Agency	Address	Web Mail
Brazil	INSTRUVAL INSTRUMENTOS E SERVICOS LTDA	Rua Castro Alves, 397 - Bairro Ceramica - Sao Catano do sul - SP	m.alcalde@instruvalnet.com.br
Bolivia	BAF&ASOCIADOS LTDA	Grigotá y 4to. Anillo Calle Jenecherú Nº 4005 Santa Cruz – Bolivia	edgar.fiengo@fangiorep.com
Venezuela	BIX OIL	Av. Principal de Lecheria, CEL piso 3 302 City Lecheria state Anzoategui 6016	clongo@bixoil.com
Columbia	BAF&ASOCIADOS LTDA	BAF&ASOCIADOS LTDA	yesid.medina@bafyasociados.com
Ecuador	DANIELCOM EQUIPMENT SUPPLY	El tiempo N37-173 y Roma Quito-Ecuador	

BMT New Technology

Featured i-Lok(i-Fitting)

- Reduce the installation time extremely.
- Assure the perfect installation.
- No required inspection gauge.
- Make cost-down greatly by the innovated productivity.
- Easy installation available even by non-skilled worker.

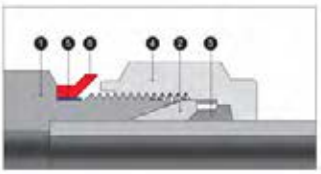

Structure

❶ BODY
❷ FRONT FERRULE
❸ BACK FERRULE
❹ NUT
❺ IDENTIFICATION RING
❻ CHECK RING

Adequate Solution For Right Technology

■ Corrosion Resistance Test

① MARKET LEADER NEW BACK FERRULE ② BMT NEW BACK FERRULE
③ BMT OLD BACK FERRULE ④ & ⑤ OTHER SUPPLIERS

SEMS(Smart-Eye Monitoring System)

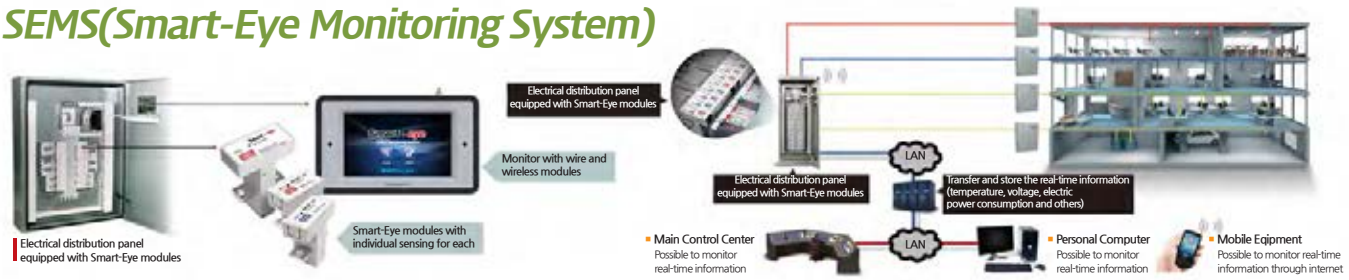

SUPERLOK®

Tube Fittings (Compression Type)

www.superlok.com

INDEX

Ordering Information

Example SUPERLOK - SU - 1 - 1 - B

1 2 3-1 3-2 4

1. SUPERLOK Tube Fitting

2. Type of Fitting(Refer to Catalogue Index)

SU : Union
SMC : Male Connector
SUE : Union Elbow
SUT : Union Tee
SWC : Weld connector
SR : Reducer
SSMC : SAE/MS O-Ring Male Connector
SAU : An union
SP : Plug

3. Size of Fitting

3-1. Tube O.D

Fractional Tube	O.D (Inch)	1/16	1/8	3/16	1/4	5/16	3/8	1/2	5/8	3/4	7/8	1	1-1/4	1-1/2	2
	Designation	1	2	3	4	5	6	8	10	12	14	16	20	24	32
Metric Tube	O.D (mm)	2	3	4	6	8	10	12	16	20	22	25	28	32	38
	Designation	2M	3M	4M	6M	8M	10M	12M	16M	20M	22M	25M	28M	32M	38M

3-2. Pipe Thread Size or tube size

Size (inch)	1/8	1/4	3/8	1/2	3/4	1	Applied Size
ISO Tapered	2R	4R	6R	8R	12R	16R	JIS B0203(PT), DIN2999, BSPT
NPT	2N	4N	6N	8N	12N	16N	ANSI B1.20.1
ISO Parallel	2G	4G	6G	8G	12G	16G	JIS B0202(PF), ISO 228/1, BSPP
Unified Screw	2U	4U	6U	8U	12U	16U	AMERICAN STANDARD UNIFIED SCREW THREAD

4. Material

Material	Aluminum	Brass	Carbon Steel A105	Carbon Steel S45C	316L Stainless Steel	316L Stainless Steel	Monel Alloy 400	Alloy 825	Alloy 625	Alloy C-276
Identify	AL	B	15	S45C	316	36L	M40	825	625	276

Example

* SMC8-6N SS316L
  SUPERLOK MALE CONNECTOR , Tube O.D: 1/2", Thread :3/8"NPT, Stainless Steel 316L

* In case of Stainless Steel, it is possible to express SS316 or 316 itself.

TEES and CROSSES

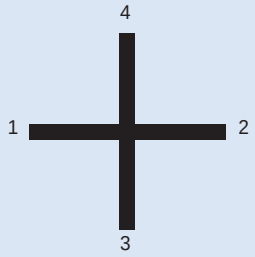

- TEES are described by the size of 1 & 2 and then the branch (3).
- CROSSES are described by the size of 1 & 2 and then the branch (3 & 4).

Ex. 1) SMBT- 6 - 6N (- 316)
MALE BRANCH TEE 3/8″ X 3/8″ X 3/8″ NPT Stainless steel 316

Ex. 2) SUC - 8 - M40
UNION CROSS 1/2″ X 1/2″ X 1/2″ X 1/2″ X Monel 400

* Products are for reference only and are subject to change on client's request.

Features of SUPERLOK Tube Fittings

SUPERLOK Tube Fittings have been designed and manufactured under the strictest material management, high precision machining and the best process technology.

SUPERLOK Tube Fittings provide a reliable, leak proof seal under severe conditions such as temperature cycling, vibration and pulsation. In addition, SUPERLOK Tube Fittings can contribute to productivity improvement because of Superior machined surfaces on the inner surface of each SUPERLOK Tube Fitting.

SUPERLOK Tube Fittings can be assembled easily without the requirement of any special tools. Consideration of the entire system design is important to insure safe and reliable results.

Structure of SUPERLOK

SUPERLOK Tube Fittings consist of four precision parts that are manufactured under the strictest of quality control. These four precision parts together make up the BEST Tube Fitting in the world.

SUPERLOK Tube Fittings secure leak free connections due to ease of assembly providing customers with confidence and appreciation of overall lower cost of installed systems.

Quality and Process Control

BMT's SUPERLOK Tube Fittings and Valves are produced to unmatched quality through strict statistical process control.
Stringent and consistent in process analysis regulates that tight tolerances are adhered to. The written Quality Control Manual is followed which demands persistent improvement in all areas of the quality process where possible.

SUPERLOK Warranty

BMT warrants that SUPERLOK Tube Fittings shall be free from defects in material and workmanship for the life of the product.

The purchaser's solutions shall be limited to replacement and installation of any parts that fail through a defect in material or workmanship.

SUPERLOK acknowledges that this brochure is regarded as the warranty and does not publish a separate warranty unless there is a specific special requirement.

SUPERLOK Installation Instruction

1. Installation under 1 inch or 25MM

SUPERLOK Tube Fittings shall be delivered to the customer completely assembled and ready for installation.
Turning the nut to the finger tight position is the only requirement before starting the installation.
Fittings should not be disassembled before installation to maintain cleanliness and prevent unwanted foreign material from entering the system.

Care in the proper selection of tubing also contributes to a safe and reliable installation.

Step 1
Insert the tubing into the SUPERLOK Tube Fitting making sure the tubing is bottomed out and is in complete contact with the shoulder of the fitting. Also, the nut should be in the finger-tight position at this time.

Step 2
Before tightening, mark the SUPERLOK nut at the 6 o'clock position.

Step 3
Hold the fitting body safely with a back-up wrench and tighten the nut 1-1/4 turns until your mark reaches the 9 o'clock position.
Note: For 1/16", 1/8"and 3/16 inch; 2, 3 and 4 mm tube fittings,tighten the nut 3/4 of a turn to the 3 o'clock position.

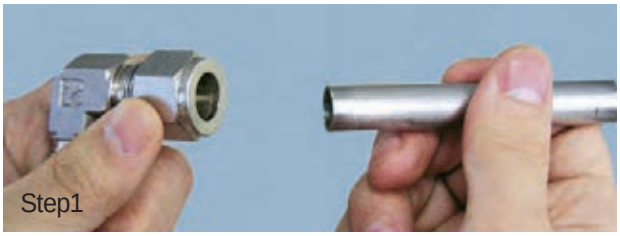

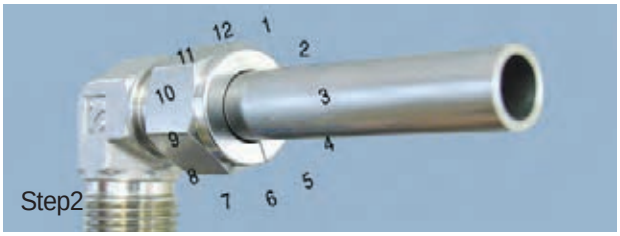

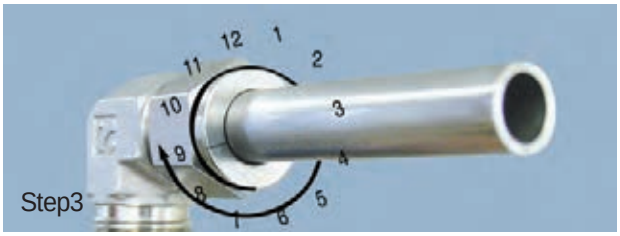

Gaugeability
On initial installation, the SUPERLOK Inspection Gauge assures the installer or inspector that a fitting has been sufficiently tightened.

Position the SUPERLOK Inspection Gauge next to the gap between the nut and the body.

- If the gauge will not enter the gap, the fitting is sufficiently tightened.
- If the gauge will enter the gap, additional tightening is required.

2. Installation for high pressure or severe service systems

Since tubing has different O.D. tolerances, it is important to have a common starting point to take out in dimensional variations. This is done by tightening the fitting slightly until the tubing can not freely rotate in the fitting as it can in the finger-tight position. At this point tighten the nut 1-1/4 turns.

Safety Considerations on Installations for High Pressure Systems

1. Make sure the proper tubing wall thickness is selected in accordance with pressure ratings. (See Page 23) Tubing should have a hardness of HRB 80 or less.
2. Do not assemble or disassemble fittings when the system is pressurized.

3. Re-tightening Instructions

Step 1

Pic. 1 shows the fitting in the disconnected position. Insert the tubing with the pre-swaged ferrules into the fitting body making sure the front ferrule is firmly seated as shown in Pic. 2

Step 2

Finger-tighten the nut and then with a wrench turn the nut to the original 9 o'clock position. At this point a slight change of resistance will be felt. Tighten the not slightly more as the change in resistance is felt and the installation is complete as shown in Pic. 3 by tightening slightly more.

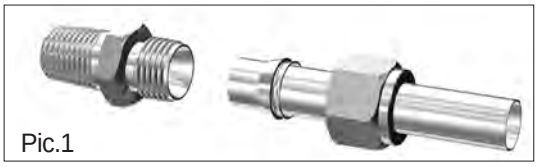

Pic.1

Pic.2

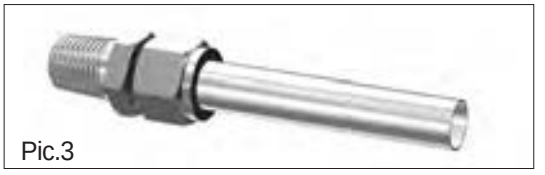

Pic.3

Technical Information

Hardness Limitation

High quality stainless steel tubing that is fully annealed; Seamless or Welded per ASTM A269, A213 or equivalent should be used with SUPERLOK Tube fittings. The tubing must be a maximum hardness of HRB 90 or less on the Rockwell Scale, however HRB 80 is more suitable for bending and offers a greater difference in hardness to the ferrules. This difference in hardness offers more ease in assembly and better interaction between the ferrules and the tubing.

Compatibility

SUPERLOK Tube fittings are manufactured in order to be 100% interchangeable with other Tube Fittings currently on the market. SUPERLOK fully warranties the compatibility of with different manufactures provided the same strict manufacturing practices and tolerances are held by those manufactures. If possible only the SUPERLOK should be used to guarantee system quality.

Gas System Application

SUPERLOK Tube Fittings are appropriate for Gas Systems, but the implementation of certain standards mentioned below should be adhered to just as in other systems.

1. Tubing hardness must be less than that of the ferrules.
2. Tubing should be free of surface imperfections, defects and round in shape.
3. Refer to Table 2 on page 23 for selection of the appropriate wall thickness. (Only shaded areas should be selected for Gas Systems)
4. Tubing ends must be cut squarely and perpendicular to the center-line of the tubing. After the tubing is cut it must be deburred on both the inside and outside with a High quality fully sharpened deburring tool.
5. Follow the SUPERLOK Installation Instructions from pages 19 and 20 in the catalog.
6. Do not attempt to bend the tubing after a fitting has been Installed in a fixed position.
7. Tubing Systems should be installed to allow for adequate expansion and contraction as well as ease of maintenance.

Material

Material	Bar Stock	Forging
316 SS	ASTM A479 ASTM A276	ASTM A182
Monel, Alloy 400	ASTM B164	ASTM B 564
Inconel, Alloy 600	ASTM B 166	ASTM B 564
Hastelloy, Alloy C-276	ASTM B 574	ASTM B 564
Brass	ASTM B 16 ASTM B 453	ASTM B 283

SUPERLOK tube fitting are available as standard in stainless steel, brass, and alloy material. Straight fittings are machined from cold finished bar stock and shaped bodies from forgings Specifications for fitting materials are listed below. For special applications, contact your local distributors.

Maximum Temperature by Materials

Aluminum	400 ℉	204 ℃
Copper	400 ℉	204 ℃
Steel	375 ℉	191 ℃
SUS304	1000 ℉	538 ℃
SUS316	1200 ℉	649 ℃
MONEL	800 ℉	427 ℃

Please refer to ASME B31.3-1993 concerning the detailed information about the maximum & minimum temperature of various materials.

Vacuum, Cryogenic and High Temperature Applications

SUPERLOK Tube Fittings have been tested in vacuum, Cryogenic and High Temperatures insuring repeatable and reliable performance in the severest of applications.

THREADS

1. NPT (National Pipe Thread)

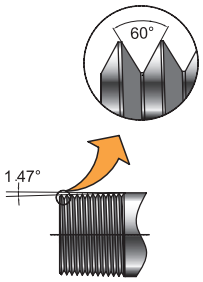

- Thread angle 60˚
- Tapered angle 1˚47′
- Manufactured by the standard of ASME B 1.20.1

2. ISO 7/1 Taperad Thread

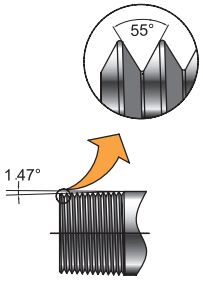

- Thread angle 55˚
- Tapered angle 1˚47′
- Equivalent to the standard of DIN2999, BS21(BSPT) and JIS B0203(PT).

3. ISO 228/1 Parallel Thread

- Thread angle 55˚
- Equivalent to the standard of BS 2779 (BSPP), JIS B0202 (PF).
- As the thread in accordance with ISO 228/1 cannot be sealed perfectly, the sealing shall be done by the following method.
- Use a gasket or O-Ring to seal.

① Bonded Washer Seal

Be sealed by contacting the inclined surface of the hex body of male thread to the surface of the female thread. In case of sealing, a washer which composed of metal and elastic material is located at the center of tapered surface.

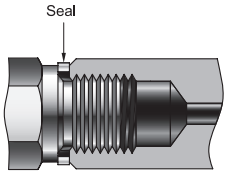

② Metal Gasket Seal

A Metal gasket(generally copper) is sealed between the body of male thread and the surface of female thread.

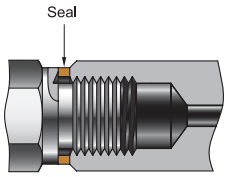

③ Metal Gasket Seal

This is a method to insert a gasket into the flat surface of thread's inside.
The sealing shall be completed with pushing the gasket by male thread surface.

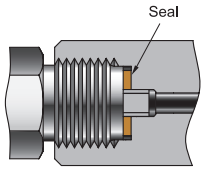

4. UNF Thread

- Thread angle 60˚
- This is classified into UN, UNC and UNF. The standard is classified by the diameter of thread and the number of threads per inch.
- ASME B 1.1

Tube Standard Information

Tube Selection

Suitable tubing selection is essential in performance of tubing system.
When selecting tubing material, size and wall thickness,
customer must consider pressure, flux (flow), temperature, environment and compatibility of system.

Consideration facts at the selection of tube

1. Quality of the tube materials & manufacturing method.
2. Thickness and outer diameter of tube.
3. Surface treatment of tube .
4. Hardness of tube.
5. Concentricity of tube.

Tube Bending

Tubing must have a minimum straight length before the start of any bend when inserting the tube into a SUPERLOK Tube Fitting. Tubing where the minimum straight length is not adhered can result in leakage and jeopardize the integrity of the system.
See the chart below for minimum straight lengths.

Requirements for quality Tubing Material

- Tubing must be free of surface imperfections and suitable for Bending.

Pressure coefficient for tubing as it relates to temperature change.

The recommended straight line length of tube in Tube bending

Tube O.D. (inch)	1/8	3/16	1/4	5/16	3/8	1/2	5/8	3/4	7/8	1
L(mm) 직선 튜빙길이	12.70	18.25	19.05	20.63	22.20	23.81	30.16	31.75	33.30	38.10

※ L: The straight line length of tubing from the ending part of tubing to the begining part of bending

The requirements for tube quality of the material

Carbon steel tubing

- ASTM A179 or equivalent.
- Carbon steel tubing for an oil pressure usage of high quality, annealed and seamless.
- Maximum hardness : HRB72.
- Tubing must be free from scars and shall be suitable for bending and expansion works.

Copper tubing

- ASTM B68, B75 or equivalent.
- Copper tubing of high quality, annealed and seamless.

Stainless steel tubing

- ASTM A213, A269 or equivalent.
- Stainless steel tubing of high quality, annealed and seamless. (316, 304, 321, etc.)
- Hardness : below HRB 80.
- Tubing must be free from scars and shall be suitable for bending and expansion works.

Monel tubing

- ASTM B165 or equivalent.
- 400 alloy tubing of high quality, annealed and seamless
- Hardness : below HRB 75.
- Tubing must be free from scars and shall be suitable for bending and expansion works.

A pressure Grade Coefficient of Tubing owing to Temperature Change.

Table 1

˚F	˚C	Copper	304SS	316SS	Monel
200	93	0.80	1.00	1.00	0.88
400	204	0.50	0.93	0.96	0.79
600	316	---	0.82	0.85	0.79
800	427	---	0.76	0.79	0.76
1000	538	---	0.69	0.76	---
1200	649	---	0.30	0.37	---

Multiply the allowable working pressure in Table 2 by the coefficient in Table1 in order to decide allowable pressure at high temperature.
(See page 22, 23)

Example

SUS316
(3/8″O.D of tube) X (0.049″ wall thickness)
1200˚F : 4800 psi X 0.37 = 1776 psi

The applicable operation pressure of SUS 316 tubing for wall thickness, 3/8″O.D X 0.049″, is 1776 psi at 1200˚F

Technological Data

Table 2 Stainless Steel Tubing

Stainless Steel tubing which is high quality (such as 304, 316, 316L and so on), fully annealed and seamless ASTM A269, A213 or equivalent.

STAINLESS STEEL FRACTIONAL TUBE

Tube O.D. (inch)	TUBE WALL THICKNESS (inch)												
	0.010	0.012	0.014	0.016	0.020	0.028	0.035	0.049	0.065	0.083	0.095	0.109	0.120
1/16	5600	6800	8100	9400	12000								
1/8						8500	10900						
3/16						5400	7000	10200					
1/4						4000	5100	7500	10200				
5/16							4000	5800	8000				
3/8							3300	4800	6500				
1/2							2600	3700	5100	6700			
5/8								2900	4000	5200	6000		
3/4								2400	3300	4200	4900	5800	
7/8								2000	2800	3600	4200	4800	
1									2400	3100	3600	4200	4700

* 가스용 Tubing working pressure(psi) / 허용상용압력(psi)

STAINLESS STEEL METRIC TUBE

Tube O.D. (mm)	TUBE WALL THICKNESS (mm)												
	0.71	0.89	1.00	1.25	1.50	1.65	2.00	2.11	2.41	2.50	2.77	3.00	3.05
3	10800	13800	15300										
4	7900	10100	11500	14400									
6	5000	6500	7400	9400	11500	12700							
8		4700	5800	6800	8400	9300							
10		3700	4200	5300	6500	7300							
12		3000	3400	4400	5300	5900	6800	7200					
16			2500	3200	3900	4300	5300	5700	6600	6800			
18				2800	3400	3800	4700	5000	5800	6000	6700		
20				2500	3000	3400	4200	4400	5100	5300	6000		
22				2300	2800	3000	3800	4000	4600	4800	5400		
25				2000	2400	2700	3300	3500	4000	4200	4700	5100	5200

* 가스용 Tubing working pressure(psi) / 허용상용압력(psi)

Allowable stress value between -20˚F and 100˚F (-28.9℃ ~ 37.8℃) is 19,500 psi
Safety factor is 4 (Ultimate tensile strength is 75,000 psi)

- The above data are based on the minimum wall thickness and the maximum O. D. allowed by and under the standard of ASTM A269.
- The dimensions are not considered to erosion or corrosion.

Single-Ferrule Tube Fitting

Available in sizes from 1/16 to 1 in

Features

- Single ferrule swaging action
- Total component interchangeability
- More tolerant of vibrations
- 316 stainless steel construction
- Heat code traceable

Introduction

Superlok Tube Fitting offers both double-ferrule and single-ferrule tube fittings.
While the double-ferrule design is more popular, there are situations where single-ferrule tube fittings are preferred.
Superlok single-ferrule tube fitting is designed to provide leak-proof, secure connections that can withstand high ressure, ibration and vacuum applications.
This fitting includes single ferrule with standard **SUPERLOK®** tube fitting(double-ferrule tube fitting) body and nut.

Pressure and Temperature Ratings

Superlok single-ferrule tube fittings are identical to standard **SUPERLOK®** tube fittings in pressure and temperature ratings.
In addition, with the same dimensions as the standard **SUPERLOK®** tube fittings. (Ref. BMT Catalog Number : BMT-CTF Rev.9)

Ordering Information

The single-ferrule tube fittings part numbering system is the same as our **SUPERLOK®** Tube Fitting, with the exception that you add an “S” as a suffix to tube O.D.

Example

SMC	-	8S	-	8N	-	SS
1		2-1		2-2		3

1. Type of Fitting

- Referred to superlok tube fitting catalog INDEX.
  Examples : SMC(male connector), SU(union),
  SME(male elbow), SUT(union tee)...

3. Material

- SS : 316 stainless steel
- B : Brass

2. Size of Fitting

2-1) Tube O.D Designation

2-1) Tube O.D(inch)	1/4	3/8	1/2	3/4	1
Designation	4S	6S	8S	12S	16S

2-2) Pipe Thread Designation

2-2) Size(inch)	1/8	1/4	3/8	1/2	3/4	1
ISO Tapered	2R	4R	6R	8R	12R	16R
Screwed NPT	2N	4N	6N	8N	12N	16N
ISO	2G	4G	6G	8G	12G	16G
Unified Screw	2U	4U	6U	8U	12U	16U

SU
Union

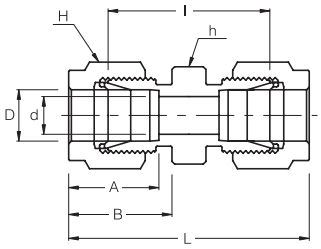

Connects Fractional Tubes

Part No.	Tube O.D. D (inch)	d Min	Width Across Flat		A	B	I	L
			h (inch)	H (inch)				
SU - 1	1/16	1.27	5/16	5/16	8.63	10.92	17.52	25.15
SU - 2	1/8	2.28	7/16	7/16	12.70	15.24	22.35	35.56
SU - 3	3/16	3.04	7/16	1/2	13.71	16.00	24.13	37.33
SU - 4	1/4	4.82	1/2	9/16	15.24	17.78	26.16	40.89
SU - 5	5/16	6.35	9/16	5/8	16.25	18.54	28.19	42.92
SU - 6	3/8	7.11	5/8	11/16	16.76	19.30	30.22	44.95
SU - 8	1/2	10.41	13/16	7/8	22.86	21.84	30.98	51.30
SU - 10	5/8	12.70	15/16	1	24.38	21.84	31.75	52.07
SU - 12	3/4	15.74	1-1/16	1-1/8	24.38	21.84	33.27	53.59
SU - 14	7/8	18.28	1-3/16	1-1/4	25.90	21.84	34.79	55.11
SU - 16	1	22.35	1-3/8	1-1/2	31.24	26.41	40.38	64.77
SU - 20	1-1/4	27.69	1-3/4	1-7/8	41.15	38.86	48.00	92.20
SU - 24	1-1/2	34.04	2-1/8	2-1/4	50.04	45.21	53.59	107.95
SU - 32	2	45.97	2-3/4	3	67.56	62.74	74.68	149.35

Connects Metric Tubes

Part No.	Tube O.D. D	d Min	Width Across Flat		A	B	I	L
			h	H				
SU - 2M	2	1.7	12	12	12.9	15.3	22.4	35.6
SU - 3M	3	2.4	12	12	12.9	15.3	22.1	35.3
SU - 4M	4	2.4	12	12	13.7	16.1	24.1	37.3
SU - 6M	6	4.8	14	14	15.3	17.7	26.2	41.0
SU - 8M	8	6.4	15	16	16.2	18.6	28.2	43.2
SU - 10M	10	7.9	18	19	17.2	19.5	31.0	46.2
SU - 12M	12	9.5	22	22	22.8	22.0	31.0	51.2
SU - 15M	15	11.9	24	25	24.4	22.0	31.8	52.0
SU - 16M	16	12.7	24	25	24.4	22.0	31.8	52.0
SU - 18M	18	15.1	27	30	24.4	22.0	33.3	53.5
SU - 20M	20	15.9	30	32	26.0	22.0	34.8	55.0
SU - 22M	22	18.3	30	32	26.0	22.0	34.8	55.0
SU - 25M	25	21.8	35	38	31.3	26.5	40.4	65.0

•All dimensions in millimeters unless specified as “inch”. Dimension are for reference only, subject to change

SRU

Reducing Union

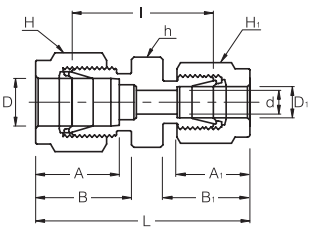

Connects Fractional Tubes

Part No.	Tube O.D.		d Min	Width Across Flat			A	A1	B	B1	I	L
	D (inch)	D1 (inch)		h (inch)	H (inch)	H1 (inch)						
SRU - 2 - 1	1/8	1/16	1.27	7/16	7/16	5/16	12.7	8.63	15.24	10.92	20.60	31.00
SRU - 3 - 2	3/16	1/8	2.28	7/16	1/2	7/16	13.71	12.70	16.00	15.24	23.36	36.57
SRU - 4 - 2	1/4	1/8	2.28	1/2	9/16	7/16	15.24	12.70	17.78	15.24	24.63	38.60
SRU - 4 - 3	1/4	3/16	3.04	1/2	9/16	1/2	15.24	13.71	17.78	16.00	25.40	39.37
SRU - 5 - 2	5/16	1/8	2.28	9/16	5/8	7/16	16.25	12.70	18.54	15.24	25.90	39.87
SRU - 5 - 4	5/16	1/4	4.82	9/16	5/8	9/16	16.25	15.24	18.54	17.78	27.43	42.16
SRU - 6 - 2	3/8	1/8	2.28	5/8	11/16	7/16	16.76	12.70	19.30	15.24	26.92	40.89
SRU - 6 - 4	3/8	1/4	4.82	5/8	11/16	9/16	16.76	15.24	19.30	17.78	28.44	43.18
SRU - 6 - 5	3/8	5/16	6.35	5/8	11/16	5/8	16.76	16.25	19.30	18.54	29.46	44.19
SRU - 8 - 2	1/2	1/8	2.28	13/16	7/8	7/16	22.86	12.70	21.84	15.24	28.44	45.21
SRU - 8 - 4	1/2	1/4	4.82	13/16	7/8	9/16	22.86	15.24	21.84	17.78	29.46	46.99
SRU - 8 - 6	1/2	3/8	7.11	13/16	7/8	11/16	22.86	16.76	21.84	19.30	30.98	48.51
SRU -10 - 6	5/8	3/8	7.11	15/16	1	11/16	24.38	16.76	21.84	19.30	31.75	49.27
SRU -10 - 8	5/8	1/2	10.41	15/16	1	7/8	24.38	22.86	21.84	21.84	31.75	52.07
SRU -12 - 4	3/4	1/4	4.82	1-1/16	1-1/8	9/16	24.38	15.24	21.84	17.78	31.75	49.27
SRU -12 - 6	3/4	3/8	7.11	1-1/16	1-1/8	11/16	24.38	16.76	21.84	19.30	33.27	50.80
SRU -12 - 8	3/4	1/2	10.41	1-1/16	1-1/8	7/8	24.38	22.86	21.84	21.84	33.27	53.59
SRU -12 - 10	3/4	5/8	12.70	1-1/16	1-1/8	1	24.38	24.38	21.84	21.84	33.27	53.59
SRU -16 - 8	1	1/2	10.41	1-3/8	1-1/2	7/8	31.24	22.86	26.41	21.84	39.50	63.24
SRU -16 - 12	1	3/4	15.74	1-3/8	1-1/2	1-1/8	31.24	24.38	26.41	21.84	39.00	62.73

Connects Metric Tubes

Part No.	Tube O.D.		d Min	Width Across Flat			A	A1	B	B1	I	L
	D	D1		h	H	H1						
SRU - 6M - 3M	6	3	2.4	14	14	12	15.3	12.9	17.7	15.3	24.6	38.6
SRU - 6M - 4M	6	4	2.4	14	14	12	15.3	13.7	17.7	16.1	25.4	39.4
SRU - 8M - 6M	8	6	4.8	15	16	14	16.2	15.3	18.6	17.7	27.4	42.3
SRU - 10M - 6M	10	6	4.8	18	19	14	17.2	15.3	19.5	17.7	29.5	44.5
SRU - 10M - 8M	10	8	6.4	18	19	16	17.2	16.2	19.5	18.6	30.0	45.1
SRU - 12M - 6M	12	6	4.8	22	22	14	22.8	15.3	22.0	17.7	29.5	47.0
SRU - 12M - 8M	12	8	6.4	22	22	16	22.8	16.2	22.0	18.6	30.2	47.8
SRU - 12M - 10M	12	10	7.9	22	22	19	22.8	17.2	22.0	19.5	31.0	48.7
SRU - 16M - 12M	16	12	9.5	24	25	22	24.4	22.8	22.0	22.0	31.8	52.0
SRU - 25M - 18M	25	18	15.1	35	38	30	31.3	24.4	26.5	22.0	38.6	61.0
SRU - 25M - 20M	25	20	15.9	35	38	32	31.3	26.0	26.5	22.0	39.9	62.3

• All dimensions in millimeters unless specified as “inch”. Dimension are for reference only, subject to change

SRU
Reducing Union

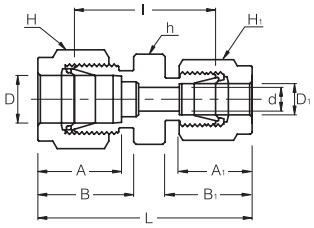

Connects Fractional Tubes To Metric Tubes

Part No.	Tube O.D.		d Min	Width Across Flat			A	A1	B	B1	l	L
	D1 (inch)	D		h	H	H						
SRU - 2 - 3M	1/8	3	2.4	12	12	11.1	12.9	12.8	15.3	15.2	22.1	35.2
SRU - 2 - 4M	1/8	4	2.4	12	12	11.1	13.7	12.8	16.1	15.2	23.4	36.5
SRU - 4 - 4M	1/4	4	2.4	14	12	14.3	13.7	15.3	16.1	17.7	25.4	39.4
SRU - 2 - 6M	1/8	6	2.4	14	14	11.1	15.3	12.8	17.7	15.2	24.6	38.5
SRU - 4 - 6M	1/4	6	4.8	14	14	14.3	15.3	15.3	17.7	17.7	26.2	41.0
SRU - 5 - 6M	5/16	6	4.8	14	14	15.9	15.3	16.2	17.7	18.6	27.4	42.3
SRU - 4 - 8M	1/4	8	4.8	15	16	14.3	16.2	15.3	18.6	17.7	27.4	42.3
SRU - 2 - 10M	1/8	10	2.4	18	19	11.1	17.2	12.8	19.5	15.2	27.7	41.8
SRU - 4 - 10M	1/4	10	4.8	18	19	14.3	17.2	15.3	19.5	17.7	29.5	44.5
SRU - 5 - 10M	5/16	10	6.4	18	19	15.9	17.2	16.2	19.5	18.6	30.0	45.1
SRU - 6 - 10M	3/8	10	7.1	18	19	17.5	17.2	16.9	19.5	19.2	31.0	45.9
SRU - 5 - 12M	5/16	12	6.4	22	22	15.9	22.8	16.2	22.0	18.6	30.2	47.8
SRU - 6 - 12M	3/8	12	7.1	22	22	17.5	22.8	16.9	22.0	19.2	31.0	48.4
SRU - 8 - 12M	1/2	12	9.5	22	22	22.2	22.8	22.8	22.0	22.0	31.0	51.2
SRU - 8 - 15M	1/2	15	10.3	24	25	22.2	24.4	22.8	22.0	22.0	31.8	52.0
SRU - 10 - 16M	5/8	16	12.7	24	25	25.4	24.4	24.4	22.0	22.0	31.8	52.0
SRU - 12 - 18M	3/4	18	15.1	27	30	28.6	24.4	24.4	22.0	22.0	33.3	53.5
SRU - 12 - 20M	3/4	20	15.9	30	32	28.6	26.0	24.4	22.0	22.0	34.8	54.9
SRU - 16 - 20M	1	20	15.9	35	32	38.1	26.0	31.2	22.0	26.4	40.4	62.8
SRU - 16 - 25M	1	25	21.8	35	38	38.1	31.3	31.3	26.5	26.5	40.4	65.0

SBHRU
Bulkhead Reducing Union

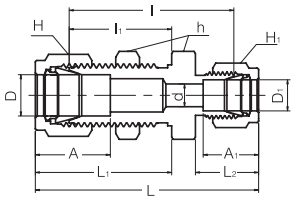

Connects Fractional Tubes

Part No.	Tube O.D.		d Min	Width Across Flat			A	A1	l	l1	L	L1	L2	Panel Hole Drill Size	Panel Max. Thickness
	D (inch)	D1 (inch)		h (inch)	H (inch)	H1 (inch)									
SBHRU - 4 - 2	1/4	1/8	2.28	5/8	9/16	7/16	15.24	12.70	41.14	26.16	55.11	33.52	15.24	11.50	10.16
SBHRU - 6 - 4	3/8	1/4	4.82	3/4	11/16	9/16	16.76	15.24	45.97	29.46	60.70	36.57	17.78	14.68	11.17
SBHRU - 8 - 4	1/2	1/4	4.82	15/16	7/8	9/16	22.86	15.24	49.27	31.75	66.80	41.91	17.78	19.44	12.70

• All dimensions in millimeters unless specified as “inch”. Dimension are for reference only, subject to change

SBHU

Bulkhead Union

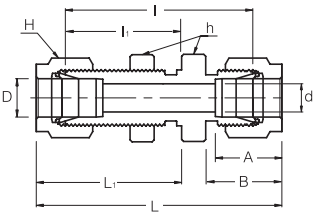

Connects Fractional Tubes

Part No.	Tube O.D. D (inch)	d Min	Width Across Flat		A	B	l	l_1	L	L_1	Panel Hole Drill Size	Panel Max. Thickness
			h (inch)	H (inch)								
SBHU - 1	1/16	1.27	5/16	5/16	8.63	10.92	23.87	13.46	31.50	17.27	5.16	3.05
SBHU - 2	1/8	2.28	1/2	7/16	12.70	15.24	38.10	24.63	51.30	31.24	8.33	12.70
SBHU - 3	3/16	3.04	9/16	1/2	13.71	16.00	40.38	25.40	53.59	32.00	9.92	12.70
SBHU - 4	1/4	4.82	5/8	9/16	15.24	17.78	42.92	26.16	57.65	33.52	11.50	10.16
SBHU - 5	5/16	6.35	11/16	5/8	16.25	18.54	45.97	28.44	60.70	35.81	13.09	11.17
SBHU - 6	3/8	7.11	3/4	11/16	16.76	19.30	47.49	29.46	62.23	36.83	14.68	11.17
SBHU - 8	1/2	10.41	15/16	7/8	22.86	21.84	50.80	31.75	71.12	41.91	19.44	12.70
SBHU - 10	5/8	12.70	1-1/16	1	24.38	21.84	52.32	32.51	72.64	42.67	22.62	12.70
SBHU - 12	3/4	15.74	1-3/16	1-1/8	24.38	21.84	58.67	37.33	78.99	47.49	25.79	16.76
SBHU - 14	7/8	18.28	1-3/8	1-1/4	25.90	21.84	64.26	42.92	84.58	53.08	28.97	19.05
SBHU - 16	1	22.35	1-5/8	1-1/2	31.24	26.41	71.37	45.21	95.75	57.40	33.73	19.05

Connects Metric Tubes

Part No.	Tube O.D. D	d Min	Width Across Flat			A	B	l	l_1	L	L_1	Panel Hole Drill Size	Panel Max. Thickness
			h	h_1*	H								
SBHU - 3M	3	2.4	14	12.7	12	12.9	15.3	38.1	24.6	51.3	31.2	8.3	12.7
SBHU - 4M	4	2.4	14	14.3	12	13.7	16.1	40.4	25.4	53.6	32.0	9.9	12.7
SBHU - 6M	6	4.8	16	15.9	14	15.3	17.7	42.9	26.2	57.7	33.6	11.5	10.2
SBHU - 8M	8	6.4	18	17.5	16	16.2	18.6	46.0	28.6	61.0	36.1	13.1	11.2
SBHU - 10M	10	7.9	22	22.0	19	17.2	19.5	48.5	29.4	63.7	37.0	16.2	11.2
SBHU - 12M	12	9.5	24	23.8	22	22.8	22.0	50.8	31.8	71.0	41.9	19.5	12.7
SBHU - 15M	15	11.9	27	27.0	25	24.4	22.0	52.3	32.5	72.5	42.6	22.8	12.7
SBHU - 16M	16	12.7	27	27.0	25	24.4	22.0	52.3	32.5	72.5	42.6	22.8	12.7
SBHU - 18M	18	15.1	30	30.0	30	24.4	22.0	58.7	37.3	78.9	47.4	26.0	16.8
SBHU - 20M	20	15.9	35	35.0	32	26.0	22.0	64.3	42.9	84.5	53.0	29.0	17.0
SBHU - 22M	22	18.3	35	35.0	32	26.0	22.0	64.3	42.9	84.5	53.0	29.0	19.1
SBHU - 25M	25	21.8	41.3	41.3	38	31.3	26.5	71.4	45.2	95.9	57.5	33.7	19.1

h_1* : Metric Tubes Bulkhead Hexagon application only

• All dimensions in millimeters unless specified as “inch”. Dimension are for reference only, subject to change

SMC
Male Connector

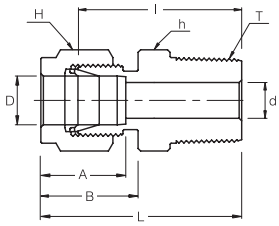

Connects Fractional Tubes To Female NPT Thread

Part No.	Tube O.D. D (inch)	T (NPT)	d Min	Width Across Flat		A	B	I	L
				h (inch)	H (inch)				
SMC - 1 - 1N	1/16	1/16	1.27	5/16	5/16	8.63	10.92	20.00	23.83
SMC - 1 - 2N	1/16	1/8	1.27	7/16	7/16	8.63	10.92	22.35	26.23
SMC - 2 - 2N	1/8	1/8	2.28	7/16	7/16	12.70	15.24	23.87	30.48
SMC - 2 - 4N	1/8	1/4	2.28	9/16	7/16	12.70	15.24	28.95	35.56
SMC - 2 - 6N	1/8	3/8	2.28	11/16	7/16	12.70	15.24	29.21	35.81
SMC - 2 - 8N	1/8	1/2	2.28	7/8	7/16	12.70	15.24	35.56	42.16
SMC - 3 - 2N	3/16	1/8	3.04	7/16	1/2	13.71	16.00	24.63	31.24
SMC - 3 - 4N	3/16	1/4	3.04	9/16	1/2	13.71	16.00	29.71	36.32
SMC - 4 - 2N	1/4	1/8	4.82	1/2	9/16	15.24	17.78	25.40	32.76
SMC - 4 - 4N	1/4	1/4	4.82	9/16	9/16	15.24	17.78	30.48	37.84
SMC - 4 - 6N	1/4	3/8	4.82	11/16	9/16	15.24	17.78	30.98	38.35
SMC - 4 - 8N	1/4	1/2	4.82	7/8	9/16	15.24	17.78	37.33	44.70
SMC - 4 - 12N	1/4	3/4	4.82	1-1/16	9/16	15.24	17.78	38.86	46.22
SMC - 5 - 2N	5/16	1/8	4.82	9/16	5/8	16.25	18.54	26.67	34.03
SMC - 5 - 4N	5/16	1/4	6.35	9/16	5/8	16.25	18.54	31.24	38.60
SMC - 5 - 6N	5/16	3/8	6.35	11/16	5/8	16.25	18.54	31.75	39.11
SMC - 6 - 2N	3/8	1/8	4.82	5/8	11/16	16.76	19.30	27.94	35.30
SMC - 6 - 4N	3/8	1/4	7.11	5/8	11/16	16.76	19.30	32.51	39.87
SMC - 6 - 6N	3/8	3/8	7.11	11/16	11/16	16.76	19.30	32.51	39.87
SMC - 6 - 8N	3/8	1/2	7.11	7/8	11/16	16.76	19.30	38.86	46.22
SMC - 6 - 12N	3/8	3/4	7.11	1-1/16	11/16	16.76	19.30	40.38	47.75
SMC - 8 - 2N	1/2	1/8	4.82	13/16	7/8	22.86	21.84	28.70	38.86
SMC - 8 - 4N	1/2	1/4	7.11	13/16	7/8	22.86	21.84	33.27	43.43
SMC - 8 - 6N	1/2	3/8	9.65	13/16	7/8	22.86	21.84	33.27	43.43
SMC - 8 - 8N	1/2	1/2	10.41	7/8	7/8	22.86	21.84	38.86	49.02
SMC - 8 - 12N	1/2	3/4	10.41	1-1/16	7/8	22.86	21.84	40.38	50.54
SMC - 8 - 16N	1/2	1	10.41	1-3/8	7/8	22.86	21.84	46.99	57.15
SMC - 10 - 6N	5/8	3/8	9.65	15/16	1	24.38	21.84	34.03	44.19
SMC - 10 - 8N	5/8	1/2	11.93	15/16	1	24.38	21.84	38.86	49.02
SMC - 10 - 12N	5/8	3/4	12.70	1-1/16	1	24.38	21.84	40.38	50.54
SMC - 12 - 8N	3/4	1/2	11.93	1-1/16	1-1/8	24.38	21.84	40.38	50.54
SMC - 12 - 12N	3/4	3/4	15.74	1-1/16	1-1/8	24.38	21.84	40.38	50.54
SMC - 12 - 16N	3/4	1	15.74	1-3/8	1-1/8	24.38	21.84	46.99	57.15
SMC - 14 - 12N	7/8	3/4	15.74	1-3/16	1-1/4	25.90	21.84	40.38	50.54
SMC - 14 - 16N	7/8	1	18.28	1-3/8	1-1/4	25.90	21.84	46.99	57.15
SMC - 16 - 8N	1	1/2	11.93	1-3/8	1-1/2	31.24	26.41	45.21	57.40
SMC - 16 - 12N	1	3/4	15.74	1-3/8	1-1/2	31.24	26.41	45.21	57.40
SMC - 16 - 16N	1	1	22.35	1-3/8	1-1/2	31.24	26.41	50.03	62.23
SMC - 20 - 16N	1-1/4	1	22.35	1-3/4	1-7/8	41.15	38.86	55.12	77.22
SMC - 20 - 20N	1-1/4	1-1/4	27.69	1-3/4	1-7/8	41.15	38.86	55.12	77.22
SMC - 24 - 24N	1-1/2	1-1/2	34.04	2-1/8	2-1/4	50.04	45.21	61.72	88.90
SMC - 32 - 32N	2	2	45.97	2-3/4	3	67.56	62.74	76.20	113.54

• All dimensions in millimeters unless specified as “inch”. Dimension are for reference only, subject to change

SMC

Male Connector

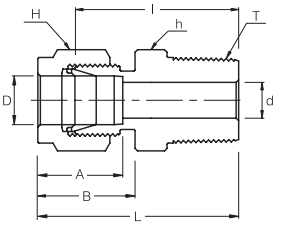

Connects Fractional Tube To Female ISO Tapered Thread

Part No.	Tube O.D. D (inch)	T R (PT)	d Min	Width Across Flat		A	B	I	L
				h (inch)	H (inch)				
SMC - 2 - 2R	1/8	1/8	2.28	7/16	7/16	12.70	15.24	23.87	30.48
SMC - 2 - 4R	1/8	1/4	2.28	9/16	7/16	12.70	15.24	28.95	35.56
SMC - 4 - 2R	1/4	1/8	4.82	1/2	9/16	15.24	17.78	25.40	32.76
SMC - 4 - 4R	1/4	1/4	4.82	9/16	9/16	15.24	17.78	30.48	37.84
SMC - 4 - 6R	1/4	3/8	4.82	11/16	9/16	15.24	17.78	30.98	38.35
SMC - 4 - 8R	1/4	1/2	4.82	7/8	9/16	15.24	17.78	37.33	44.70
SMC - 5 - 2R	5/16	1/8	4.82	9/16	5/8	16.25	18.54	26.67	34.03
SMC - 5 - 4R	5/16	1/4	6.35	9/16	5/8	16.25	18.54	31.24	38.60
SMC - 6 - 2R	3/8	1/8	4.82	5/8	11/16	16.76	19.30	27.94	35.30
SMC - 6 - 4R	3/8	1/4	7.11	5/8	11/16	16.76	19.30	32.51	39.87
SMC - 6 - 6R	3/8	3/8	7.11	11/16	11/16	16.76	19.30	32.51	39.87
SMC - 6 - 8R	3/8	1/2	7.11	7/8	11/16	16.76	19.30	38.86	46.22
SMC - 8 - 4R	1/2	1/4	7.11	13/16	7/8	22.86	21.84	33.27	43.43
SMC - 8 - 6R	1/2	3/8	9.65	13/16	7/8	22.86	21.84	33.27	43.43
SMC - 8 - 8R	1/2	1/2	10.41	7/8	7/8	22.86	21.84	38.86	49.02
SMC - 8 - 12R	1/2	3/4	10.41	1-1/16	7/8	22.86	21.84	40.38	50.54
SMC - 12 - 12R	3/4	3/4	15.74	1-1/16	1-1/8	24.38	21.84	40.38	50.54
SMC - 16 - 16R	1	1	22.35	1-3/8	1-1/2	31.24	26.41	50.03	62.23

Bored - Through Fittings for Thermocouples

SUPERLOK Bored-Through MALE CONNECTORS accommodate thermocouples or dip tubes
To order, use TM as a suffix to the desired Male Connector ordering number.

Note - The root diameter of the pipe thread end of male connectors makes it impractical to bore through all male connectors.

• All dimensions in millimeters unless specified as “inch”. Dimension are for reference only, subject to change

SMC
Male Connector

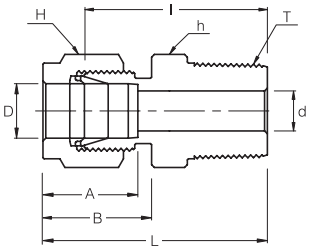

Connects Metric Tube To Female NPT Thread

Part No.	Tube O.D. D	T (NPT)	d Min	Width Across Flat		A	B	I	L
				h	H				
SMC - 2M - 2N	2	1/8	1.7	12	12	12.9	15.3	23.9	30.5
SMC - 3M - 2N	3	1/8	2.4	12	12	12.9	15.3	23.9	30.5
SMC - 3M - 4N	3	1/4	2.4	14	12	12.9	15.3	29.0	35.6
SMC - 4M - 2N	4	1/8	2.4	12	12	13.7	16.1	24.6	31.2
SMC - 4M - 4N	4	1/4	2.4	14	12	13.7	16.1	29.7	36.3
SMC - 6M - 2N	6	1/8	4.8	14	14	15.3	17.7	25.4	32.8
SMC - 6M - 4N	6	1/4	4.8	14	14	15.3	17.7	30.5	37.9
SMC - 6M - 6N	6	3/8	4.8	18	14	15.3	17.7	31.0	38.4
SMC - 6M - 8N	6	1/2	4.8	22	14	15.3	17.7	37.3	44.7
SMC - 8M - 2N	8	1/8	4.8	15	16	16.2	18.6	26.7	34.2
SMC - 8M - 4N	8	1/4	6.4	15	16	16.2	18.6	31.2	38.7
SMC - 8M - 6N	8	3/8	6.4	18	16	16.2	18.6	31.8	39.3
SMC - 8M - 8N	8	1/2	6.4	22	16	16.2	18.6	38.1	45.6
SMC - 10M - 2N	10	1/8	4.8	18	19	17.2	19.5	28.7	36.3
SMC - 10M - 4N	10	1/4	7.9	18	19	17.2	19.5	33.3	40.9
SMC - 10M - 6N	10	3/8	7.9	18	19	17.2	19.5	33.3	40.9
SMC - 10M - 8N	10	1/2	7.9	22	19	17.2	19.5	38.9	46.5
SMC - 12M - 2N	12	1/8	4.8	22	22	22.8	22.0	28.7	38.8
SMC - 12M - 4N	12	1/4	7.1	22	22	22.8	22.0	33.3	43.4
SMC - 12M - 6N	12	3/8	9.5	22	22	22.8	22.0	33.3	43.4
SMC - 12M - 8N	12	1/2	9.5	22	22	22.8	22.0	38.9	49.0
SMC - 12M - 12N	12	3/4	9.5	27	22	22.8	22.0	40.4	50.5
SMC - 14M - 4N	14	1/4	7.1	24	25	24.4	22.0	34.0	44.1
SMC - 14M - 6N	14	3/8	9.5	24	25	24.4	22.0	34.0	44.1
SMC - 14M - 8N	14	1/2	11.1	24	25	24.4	22.0	38.9	49.0
SMC - 16M - 6N	16	3/8	9.5	24	25	24.4	22.0	34.0	44.1
SMC - 16M - 8N	16	1/2	11.9	24	25	24.4	22.0	38.9	49.0
SMC - 16M - 12N	16	3/4	12.7	27	25	24.4	22.0	40.4	50.5
SMC - 18M - 8N	18	1/2	11.9	27	30	24.4	22.0	40.4	50.5
SMC - 18M - 12N	18	3/4	15.1	27	30	24.4	22.0	40.4	50.5
SMC - 20M - 8N	20	1/2	11.9	30	32	26.0	22.0	42.2	52.3
SMC - 20M - 12N	20	3/4	15.9	30	32	26.0	22.0	42.2	52.3
SMC - 22M - 12N	22	3/4	15.9	30	32	26.0	22.0	42.2	52.3
SMC - 22M - 16N	22	1	18.3	35	32	26.0	22.0	47.0	57.1
SMC - 25M - 12N	25	3/4	15.9	35	38	31.3	26.5	45.2	57.5
SMC - 25M - 16N	25	1	21.8	35	38	31.3	26.5	50.0	62.3
SMC -28M - 16N	28	1	21.8	41	46	36.6	36.6	51.6	72.4
SMC - 28M - 20N	28	1-1/4	21.8	44.4	46	36.6	36.6	52.3	73.1
SMC - 30M - 20N	30	1-1/4	26.2	46	50	39.6	39.2	55.6	77.2
SMC - 32M - 20N	32	1-1/4	28.6	46	50	42.0	41.6	56.6	79.6
SMC - 38M - 24N	38	1-1/2	33.7	55	60	49.4	47.9	64.0	91.6

• All dimensions in millimeters unless specified as “inch”. Dimension are for reference only, subject to change

SMC

Male Connector

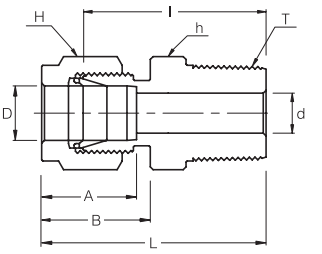

Connects Metric Tube To Female ISO Tapered Thread

Part No.	Tube O.D. D	T R (PT)	d Min	Width Across Flat		A	B	I	L
				h	H				
SMC - 2M - 2R	2	1/8	1.7	12	12	12.9	15.3	23.9	30.5
SMC - 3M - 2R	3	1/8	2.4	12	12	12.9	15.3	23.9	30.5
SMC - 3M - 4R	3	1/4	2.4	14	12	12.9	15.3	29.0	35.6
SMC - 4M - 2R	4	1/8	2.4	12	12	13.7	16.1	24.6	31.2
SMC - 4M - 4R	4	1/4	2.4	14	12	13.7	16.1	29.7	36.3
SMC - 6M - 2R	6	1/8	4.8	14	14	15.3	17.7	25.4	32.8
SMC - 6M - 4R	6	1/4	4.8	14	14	15.3	17.7	30.5	37.9
SMC - 6M - 6R	6	3/8	4.8	18	14	15.3	17.7	31.0	38.4
SMC - 6M - 8R	6	1/2	4.8	22	14	15.3	17.7	37.3	44.7
SMC - 8M - 2R	8	1/8	4.8	15	16	16.2	18.6	26.7	34.2
SMC - 8M - 4R	8	1/4	6.4	15	16	16.2	18.6	31.2	38.7
SMC - 8M - 6R	8	3/8	6.4	18	16	16.2	18.6	31.8	39.3
SMC - 8M - 8R	8	1/2	6.4	22	16	16.2	18.6	38.1	45.6
SMC - 10M - 2R	10	1/8	4.8	18	19	17.2	19.5	28.7	36.3
SMC - 10M - 4R	10	1/4	7.9	18	19	17.2	19.5	33.3	40.9
SMC - 10M - 6R	10	3/8	7.9	18	19	17.2	19.5	33.3	40.9
SMC - 10M - 8R	10	1/2	7.9	22	19	17.2	19.5	38.9	46.5
SMC - 12M - 4R	12	1/4	7.1	22	22	22.8	22.0	33.3	43.4
SMC - 12M - 6R	12	3/8	9.5	22	22	22.8	22.0	33.3	43.4
SMC - 12M - 8R	12	1/2	9.5	22	22	22.8	22.0	38.9	49.0
SMC - 12M - 12R	12	3/4	9.5	27	22	22.8	22.0	40.4	50.5
SMC - 15M - 8R	15	1/2	11.9	24	25	24.4	22.0	38.9	49.0
SMC - 16M - 4R	16	1/4	7.1	24	25	24.4	22.0	34.0	44.1
SMC - 16M - 6R	16	3/8	9.5	24	25	24.4	22.0	34.0	44.1
SMC - 16M - 8R	16	1/2	11.9	24	25	24.4	22.0	38.9	49.0
SMC - 16M - 12R	16	3/4	12.7	27	25	24.4	22.0	40.4	50.5
SMC - 18M - 8R	18	1/2	11.9	27	30	24.4	22.0	40.4	50.5
SMC - 18M - 12R	18	3/4	15.1	27	30	24.4	22.0	40.4	50.5
SMC - 20M - 8R	20	1/2	11.9	30	32	26.0	22.0	42.2	52.3
SMC - 20M - 12R	20	3/4	15.9	30	32	26.0	22.0	42.2	52.3
SMC - 22M - 12R	22	3/4	15.9	30	32	26.0	22.0	42.2	52.3
SMC - 22M - 16R	22	1	18.3	35	32	26.0	22.0	47.0	57.1
SMC - 25M - 12R	25	3/4	15.9	35	38	31.3	26.5	45.2	57.5
SMC - 25M - 16R	25	1	21.8	35	38	31.3	26.5	50.0	62.3
SMC - 28M - 16R	28	1	21.8	41	46	36.6	36.6	51.6	72.4
SMC - 28M - 20R	28	1-1/4	21.8	44.4	46	36.6	36.6	52.3	73.1
SMC - 30M - 20R	30	1-1/4	26.2	46	50	39.6	39.2	55.6	77.2
SMC - 32M - 20R	32	1-1/4	28.6	46	50	42.0	41.6	56.6	79.6
SMC - 38M - 24R	38	1-1/2	33.7	55	60	49.4	47.9	64.0	91.6

• All dimensions in millimeters unless specified as “inch”. Dimension are for reference only, subject to change

SMC - GM

Male Connector
For Metal Gasket Seal

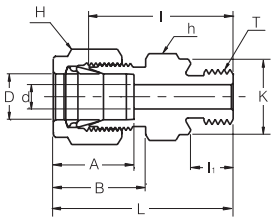

Connects Metric Tube To Female ISO Parallel Thread

Part No.	Tube O.D. D	T G (PF)	d Min	Width Across Flat		A	B	l	l1	L	K
				h	H						
SMC - 3M - 2GM	3	1/8	2.4	14	12	12.9	15.3	23.4	8.0	30.0	14.0
SMC - 3M - 4GM	3	1/4	2.4	19	12	12.9	15.3	28.7	12.0	35.3	18.0
SMC - 4M - 2GM	4	1/8	2.4	14	12	13.7	16.1	24.1	8.0	30.7	14.0
SMC - 6M - 2GM	6	1/8	4.0	14	14	15.3	17.7	24.9	8.0	32.3	14.0
SMC - 6M - 4GM	6	1/4	4.8	19	14	15.3	17.7	30.2	12.0	37.6	18.0
SMC - 6M - 6GM	6	3/8	4.8	22	14	15.3	17.7	31.5	12.0	38.9	22.0
SMC - 6M - 8GM	6	1/2	4.8	27	14	15.3	17.7	37.3	14.0	44.7	26.0
SMC - 8M - 2GM	8	1/8	4.0	15	16	16.2	18.6	25.7	8.0	33.2	14.0
SMC - 8M - 4GM	8	1/4	6.4	19	16	16.2	18.6	31.0	12.0	38.5	18.0
SMC - 8M - 6GM	8	3/8	6.4	22	16	16.2	18.6	32.3	12.0	39.8	22.0
SMC - 8M - 8GM	8	1/2	6.4	27	16	16.2	18.6	38.1	14.0	45.6	26.0
SMC - 10M - 4GM	10	1/4	5.9	19	19	17.2	19.5	31.8	12.0	39.4	18.0
SMC - 10M - 6GM	10	3/8	7.9	22	19	17.2	19.5	33.0	12.0	40.6	22.0
SMC - 10M - 8GM	10	1/2	7.9	27	19	17.2	19.5	38.9	14.0	46.5	26.0
SMC - 12M - 4GM	12	1/4	5.9	22	22	22.8	22.0	32.5	12.0	42.6	18.0
SMC - 12M - 6GM	12	3/8	7.9	22	22	22.8	22.0	33.0	12.0	43.1	22.0
SMC - 12M - 8GM	12	1/2	9.5	27	22	22.8	22.0	38.9	14.0	49.0	26.0
SMC - 12M - 12GM	12	3/4	9.5	35	22	22.8	22.0	42.7	16.0	52.8	32.0
SMC - 15M - 8GM	15	1/2	11.9	27	25	24.4	22.0	38.9	14.0	49.0	26.0
SMC - 16M - 6GM	16	3/8	7.9	24	25	24.4	22.0	33.8	12.0	43.9	22.0
SMC - 16M - 8GM	16	1/2	11.9	27	25	24.4	22.0	38.9	14.0	49.0	26.0
SMC - 18M - 8GM	18	1/2	11.9	27	30	24.4	22.0	38.9	14.0	49.0	26.0
SMC - 18M - 12GM	18	3/4	15.1	35	30	24.4	22.0	42.7	16.0	52.8	32.0
SMC - 20M - 8GM	20	1/2	11.9	30	32	26.0	22.0	40.4	14.0	50.5	26.0
SMC - 20M - 12GM	20	3/4	15.9	35	32	26.0	22.0	42.7	16.0	52.8	32.0
SMC - 22M - 12GM	22	3/4	15.9	35	32	26.0	22.0	42.7	16.0	52.8	32.0
SMC - 22M - 16GM	22	1	18.3	41	32	26.0	22.0	45.2	18.0	55.3	39.0
SMC - 25M - 12GM	25	3/4	15.9	35	38	31.3	26.5	45.2	16.0	57.5	32.0
SMC - 25M - 16GM	25	1	19.8	41	38	31.3	26.5	47.8	18.0	60.1	39.0

* See page 21 for Explanation of ISO Pipe Thread.

• All dimensions in millimeters unless specified as “inch”. Dimension are for reference only, subject to change

SGMC

Male Connector
For Bonded Washer Seal

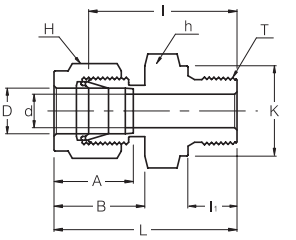

Connects Metric Tubes To Female ISO Parallel Thread

Part No.	Tube O.D. D	T G (PF)	d Min	Width Across Flat h	Width Across Flat H	A	B	l	l_1	L	K
SGMC - 3M - 2G	3	1/8	2.4	14	12	12.9	15.3	23.4	8.0	30.0	14.0
SGMC - 3M - 4G	3	1/4	2.4	19	12	12.9	15.3	28.7	12.0	35.3	18.0
SGMC - 4M - 2G	4	1/8	2.4	14	12	13.7	16.1	24.1	8.0	30.7	14.0
SGMC - 6M - 2G	6	1/8	4.0	14	14	15.3	17.7	24.9	8.0	32.3	14.0
SGMC - 6M - 4G	6	1/4	4.8	19	14	15.3	17.7	30.2	12.0	37.6	18.0
SGMC - 6M - 6G	6	3/8	4.8	22	14	15.3	17.7	31.5	12.0	38.9	22.0
SGMC - 6M - 8G	6	1/2	4.8	27	14	15.3	17.7	37.3	14.0	44.7	26.0
SGMC - 8M - 2G	8	1/8	4.0	15	16	16.2	18.6	25.7	8.0	33.2	14.0
SGMC - 8M - 4G	8	1/4	6.4	19	16	16.2	18.6	31.0	12.0	38.5	18.0
SGMC - 8M - 6G	8	3/8	6.4	22	16	16.2	18.6	32.3	12.0	39.8	22.0
SGMC - 8M - 8G	8	1/2	6.4	27	16	16.2	18.6	38.1	14.0	45.6	26.0
SGMC - 10M - 4G	10	1/4	5.9	19	19	17.2	19.5	31.8	12.0	39.4	18.0
SGMC - 10M - 6G	10	3/8	7.9	22	19	17.2	19.5	33.0	12.0	40.6	22.0
SGMC - 10M - 8G	10	1/2	7.9	27	19	17.2	19.5	38.9	14.0	46.5	26.0
SGMC - 12M - 4G	12	1/4	5.9	22	22	22.8	22.0	32.5	12.0	42.6	18.0
SGMC - 12M - 6G	12	3/8	7.9	22	22	22.8	22.0	33.0	12.0	43.1	22.0
SGMC - 12M - 8G	12	1/2	9.5	27	22	22.8	22.0	38.9	14.0	49.0	26.0
SGMC - 12M - 12G	12	3/4	9.5	35	22	22.8	22.0	42.7	16.0	52.8	32.0
SGMC - 16M - 6G	16	3/8	7.9	24	25	24.4	22.0	33.8	12.0	43.9	22.0
SGMC - 16M - 8G	16	1/2	11.9	27	25	24.4	22.0	38.9	14.0	49.0	26.0
SGMC - 18M - 8G	18	1/2	11.9	27	30	24.4	22.0	38.9	14.0	49.0	26.0
SGMC - 18M - 12G	18	3/4	15.1	35	30	24.4	22.0	42.7	16.0	52.8	32.0
SGMC - 20M - 8G	20	1/2	11.9	30	32	26.0	22.0	40.4	14.0	50.5	26.0
SGMC - 20M - 12G	20	3/4	15.9	35	32	26.0	22.0	42.7	16.0	52.8	32.0
SGMC - 22M - 12G	22	3/4	15.9	35	32	26.0	22.0	42.7	16.0	52.8	32.0
SGMC - 22M - 16G	22	1	18.3	41	32	26.0	22.0	45.2	18.0	55.3	39.0
SGMC - 25M - 12G	25	3/4	15.9	35	38	31.3	26.5	45.2	16.0	57.5	32.0
SGMC - 25M - 16G	25	1	19.8	41	38	31.3	26.5	47.8	18.0	60.1	39.0

* See page 21 for Explanation of ISO Pipe Thread.

• All dimensions in millimeters unless specified as “inch”. Dimension are for reference only, subject to change

SFC

Female Connector

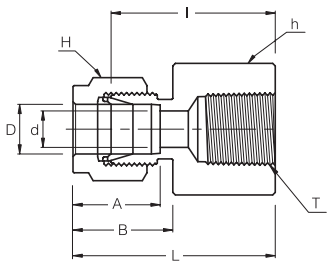

Connects Fractional Tubes To Male NPT Thread

Part No.	Tube O.D. D (inch)	T * (NPT)	d Min	Width Across Flat		A	B	I	L
				h (inch)	H (inch)				
SFC - 2 - 2N	1/8	1/8	2.28	9/16	7/16	12.70	15.24	22.09	28.70
SFC - 2 - 4N	1/8	1/4	2.28	3/4	7/16	12.70	15.24	26.92	33.52
SFC - 3 - 2N	3/16	1/8	3.04	9/16	1/2	13.71	16.00	23.11	29.71
SFC - 4 - 2N	1/4	1/8	4.82	9/16	9/16	15.24	17.78	23.87	31.24
SFC - 4 - 4N	1/4	1/4	4.82	3/4	9/16	15.24	17.78	28.44	35.81
SFC - 4 - 6N	1/4	3/8	4.82	7/8	9/16	15.24	17.78	30.22	37.59
SFC - 4 - 8N	1/4	1/2	4.82	1-1/16	9/16	15.24	17.78	35.05	42.41
SFC - 5 - 2N	5/16	1/8	6.35	9/16	5/8	16.25	18.54	24.63	32.00
SFC - 5 - 4N	5/16	1/4	6.35	3/4	5/8	16.25	18.54	29.46	36.83
SFC - 6 - 2N	3/8	1/8	7.11	5/8	11/16	16.76	19.30	25.40	32.76
SFC - 6 - 4N	3/8	1/4	7.11	3/4	11/16	16.76	19.30	30.22	37.59
SFC - 6 - 6N	3/8	3/8	7.11	7/8	11/16	16.76	19.30	31.75	39.11
SFC - 6 - 8N	3/8	1/2	7.11	1-1/16	11/16	16.76	19.30	36.57	43.94
SFC - 6 - 12N	3/8	3/4	7.11	1-5/16	11/16	16.76	19.30	40.38	47.75
SFC - 8 - 4N	1/2	1/4	10.41	13/16	7/8	22.86	21.84	30.22	40.38
SFC - 8 - 6N	1/2	3/8	10.41	7/8	7/8	22.86	21.84	31.75	41.91
SFC - 8 - 8N	1/2	1/2	10.41	1-1/16	7/8	22.86	21.84	36.57	46.73
SFC - 8 - 12N	1/2	3/4	10.41	1-5/16	7/8	22.86	21.84	38.10	48.26
SFC -10 - 6N	5/8	3/8	12.70	15/16	1	24.38	21.84	31.75	41.91
SFC -10 - 8N	5/8	1/2	12.70	1-1/16	1	24.38	21.84	36.57	46.73
SFC -12 - 8N	3/4	1/2	15.74	1-1/16	1-1/8	24.38	21.84	36.57	46.73
SFC -12 - 12N	3/4	3/4	15.74	1-5/16	1-1/8	24.38	21.84	38.10	48.26
SFC -14 - 12N	7/8	3/4	18.28	1-5/16	1-1/4	25.90	21.84	39.62	49.78
SFC -16 - 12N	1	3/4	22.35	1-3/8	1-1/2	31.24	26.41	41.14	53.34
SFC -16 - 16N	1	1	22.35	1-5/8	1-1/2	31.24	26.41	50.03	62.23

* ISO Tapered Threads are available upon request
* ISO Parallel Threads are available upon request

• All dimensions in millimeters unless specified as “inch”. Dimension are for reference only, subject to change

SFC

Female Connector

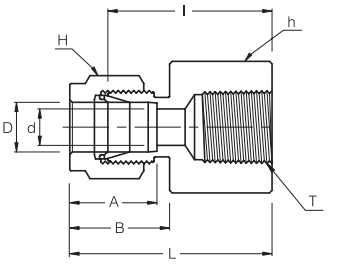

Connects Metric Tubes To Male ISO Tapered Thread

Part No.	Tube O.D. D	T * R (PT)	d Min	Width Across Flat		A	B	I	L
				h	H				
SFC - 3M - 2R	3	1/8	2.4	14	12	12.9	15.3	22.1	28.7
SFC - 3M - 4R	3	1/4	2.4	19	12	12.9	15.3	26.9	33.5
SFC - 4M - 2R	4	1/8	2.4	14	12	13.7	16.1	23.1	29.7
SFC - 6M - 2R	6	1/8	4.8	14	14	15.3	17.7	23.9	31.3
SFC - 6M - 4R	6	1/4	4.8	19	14	15.3	17.7	28.4	35.8
SFC - 6M - 6R	6	3/8	4.8	22	14	15.3	17.7	30.2	37.6
SFC - 6M - 8R	6	1/2	4.8	27	14	15.3	17.7	35.1	42.5
SFC - 8M - 2R	8	1/8	6.4	15	16	16.2	18.6	24.6	32.1
SFC - 8M - 4R	8	1/4	6.4	19	16	16.2	18.6	29.5	37.0
SFC - 8M - 6R	8	3/8	6.4	22	16	16.2	18.6	31.0	38.5
SFC - 8M - 8R	8	1/2	6.4	27	16	16.2	18.6	35.8	43.3
SFC - 10M - 2R	10	1/8	7.9	18	19	17.2	19.5	25.4	33.0
SFC - 10M - 4R	10	1/4	7.9	19	19	17.2	19.5	30.2	37.8
SFC - 10M - 6R	10	3/8	7.9	22	19	17.2	19.5	31.8	39.4
SFC - 10M - 8R	10	1/2	7.9	27	19	17.2	19.5	36.6	44.2
SFC - 12M - 2R	12	1/8	8.3	22	22	22.8	22.0	25.4	35.5
SFC - 12M - 4R	12	1/4	9.5	22	22	22.8	22.0	30.2	40.3
SFC - 12M - 6R	12	3/8	9.5	22	22	22.8	22.0	31.8	41.9
SFC - 12M - 8R	12	1/2	9.5	27	22	22.8	22.0	36.6	46.7
SFC - 12M - 12R	12	3/4	9.5	35	22	22.8	22.0	38.9	49.0
SFC - 15M - 8R	15	1/2	11.9	27	25	24.4	22.0	36.6	46.7
SFC - 16M - 8R	16	1/2	12.7	27	25	24.4	22.0	36.8	46.9
SFC - 20M - 8R	20	1/2	15.9	30	32	26.0	22.0	37.8	47.9
SFC - 20M - 12R	20	3/4	15.9	35	32	26.0	22.0	39.6	49.7
SFC - 22M - 12R	22	3/4	18.3	35	32	26.0	22.0	39.6	49.7
SFC - 22M - 16R	22	1	18.3	41	32	26.0	22.0	47.8	57.9
SFC - 25M - 12R	25	3/4	21.8	35	38	31.3	26.5	41.1	53.4
SFC - 25M - 16R	25	1	21.8	41	38	31.3	26.5	50.0	62.3

* NPT Threads are available upon request
* ISO Parallel Threads are available upon request

• All dimensions in millimeters unless specified as “inch”. Dimension are for reference only, subject to change

SGC

Gauge Connector

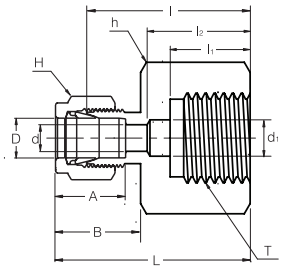

Connects Fractional Tubes To ISO Parallel Thread

Part No.	Tube O.D. D (inch)	T G (PF)	d Min	d_1	Width Across Flat		A	B	l	l_1	l_2	L
					h (inch)	H (inch)						
SGC - 4 - 4G	1/4	1/4	4.82	5.58	3/4	9/16	15.24	17.78	30.22	13.00	17.00	37.59
SGC - 4 - 6G	1/4	3/8	4.82	6.60	15/16	9/16	15.24	17.78	30.22	14.20	20.30	37.59
SGC - 4 - 8G	1/4	1/2	4.82	6.60	1-1/16	9/16	15.24	17.78	36.07	18.80	24.90	43.43
SGC - 5 - 4G	5/16	1/4	5.58	-	3/4	5/8	16.25	18.54	30.98	13.00	-	38.35
SGC - 5 - 8G	5/16	1/2	7.11	-	1-1/16	5/8	16.25	18.54	33.53	18.80	-	40.89
SGC - 6 - 4G	3/8	1/4	5.58	-	3/4	11/16	16.76	19.30	31.75	13.00	-	39.12
SGC - 6 - 6G	3/8	3/8	6.60	-	15/16	11/16	16.76	19.30	31.24	14.20	-	38.61
SGC - 6 - 8G	3/8	1/2	7.11	-	1-1/16	11/16	16.76	19.30	34.54	18.80	-	41.91
SGC - 8 - 4G	1/2	1/4	5.58	-	7/8	7/8	22.86	21.84	31.80	13.00	-	41.95
SGC - 8 - 6G	1/2	3/8	6.60	-	15/16	7/8	22.86	21.84	34.29	14.20	-	44.45
SGC - 8 - 8G	1/2	1/2	7.11	7.11	1-1/16	7/8	22.86	21.84	38.10	18.80	-	48.26

Connects Metric Tubes To ISO Parallel Thread

Part No.	Tube O.D. D (inch)	T G (PF)	d Min	d_1	Width Across Flat		A	B	l	l_1	l_2	L
					h	H						
SGC - 3M - 4G	3	1/4	2.4	5.5	19	12	12.9	15.3	28.7	13	17	35.3
SGC - 6M - 4G	6	1/4	4.8	5.5	19	14	15.3	17.7	30.2	13	17	37.6
SGC - 6M - 6G	6	3/8	4.8	6.5	24	14	15.3	17.7	30.2	14	20	37.6
SGC - 6M - 8G	6	1/2	4.8	7.0	27	14	15.3	17.7	36.1	19	25	43.5
SGC - 8M - 4G	8	1/4	5.5	5.5	19	16	16.2	18.6	31.0	13	-	38.5
SGC - 8M - 6G	8	3/8	6.5	6.5	24	16	16.2	18.6	28.7	14	-	36.2
SGC - 8M - 8G	8	1/2	7.0	7.0	27	16	16.2	18.6	33.5	19	-	41.0
SGC - 10M - 4G	10	1/4	5.5	5.5	19	19	17.2	19.5	31.8	13	-	39.4
SGC - 10M - 6G	10	3/8	6.5	6.5	24	19	17.2	19.5	31.2	14	-	38.8
SGC - 10M - 8G	10	1/2	7.0	7.0	27	19	17.2	19.5	34.5	19	-	42.1
SGC - 12M - 4G	12	1/4	5.5	5.5	22	22	22.8	22.0	31.8	13	-	41.9
SGC - 12M - 6G	12	3/8	6.5	6.5	24	22	22.8	22.0	34.3	14	-	44.4
SGC - 12M - 8G	12	1/2	7.0	7.0	27	22	22.8	22.0	38.1	19	-	48.2
SGC - 20M - 8G	20	1/2	7.0	7.0	30	32	26.0	22.0	44.2	19	-	54.3
SGC - 22M - 8G	22	1/2	7.0	7.0	30	32	26.0	22.0	44.2	19	-	54.3

* See page 21 for Explanation of ISO Pipe Thread.

• All dimensions in millimeters unless specified as “inch”. Dimension are for reference only, subject to change

SMCB

Bulkhead Male Connector

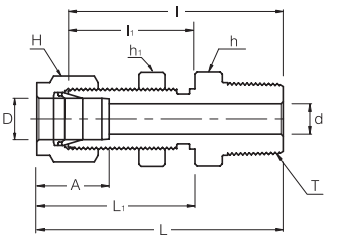

Connects Fractional Tubes To Female NPT Thread

Part No.	Tube O.D. D (inch)	T * (NPT)	d Min	Width Across Flat			A	l	l1	L	L1	Panel Hole Drill Size	Panel Max. Thickness
				h (inch)	h1 (inch)	H (inch)							
SMCB - 2 - 2N	1/8	1/8	2.28	1/2	1/2	7/16	12.70	39.87	24.63	46.48	31.24	8.33	12.70
SMCB - 4 - 2N	1/4	1/8	4.82	5/8	5/8	9/16	15.24	42.16	26.16	49.53	33.52	11.50	10.16
SMCB - 4 - 4N	1/4	1/4	4.82	5/8	5/8	9/16	15.24	46.73	26.16	54.10	33.52	11.50	10.16
SMCB - 6 - 4N	3/8	1/4	7.11	3/4	3/4	11/16	16.76	50.03	29.46	57.40	36.83	14.68	11.17
SMCB - 6 - 6N	3/8	3/8	7.11	3/4	3/4	11/16	16.76	50.03	29.46	57.40	36.83	14.68	11.17
SMCB - 6 - 8N	3/8	1/2	7.11	7/8	3/4	11/16	16.76	56.38	29.46	63.75	36.83	14.68	11.17
SMCB - 8 - 6N	1/2	3/8	9.65	15/16	15/16	7/8	22.86	53.08	31.75	63.24	41.91	19.44	12.70
SMCB - 8 - 8N	1/2	1/2	10.41	15/16	15/16	7/8	22.86	58.67	31.75	68.83	41.91	19.44	12.70
SMCB - 12 - 12N	3/4	3/4	15.74	1-3/16	1-3/16	1-1/8	24.38	66.04	37.33	76.20	47.49	25.79	16.76
SMCB - 16 - 16N	1	1	22.35	1-5/8	1-5/8	1-1/2	31.24	81.02	45.21	93.21	57.40	33.73	19.05

* ISO Tapered Threads are available upon request

SFCB

Bulkhead Female Connector

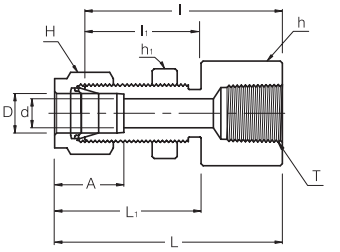

Connects Fractional Tubes To Male NPT Thread

Part No.	Tube O.D. D (inch)	T * (NPT)	d Min	Width Across Flat			A	l	l1	L	L1	Panel Hole Drill Size	Panel Max. Thickness
				h (inch)	h1 (inch)	H (inch)							
SFCB - 2 - 2N	1/8	1/8	2.28	9/16	1/2	7/16	12.70	38.10	24.63	44.70	31.24	8.33	12.70
SFCB - 4 - 2N	1/4	1/8	4.82	5/8	5/8	9/16	15.24	39.62	26.16	46.99	33.52	11.50	10.16
SFCB - 4 - 4N	1/4	1/4	4.82	3/4	5/8	9/16	15.24	44.45	26.16	51.81	33.52	11.50	10.16
SFCB - 6 - 4N	3/8	1/4	7.11	3/4	3/4	11/16	16.76	47.75	29.46	55.11	36.83	14.68	11.17
SFCB - 8 - 6N	1/2	3/8	10.41	15/16	15/16	7/8	22.86	51.56	31.75	61.72	41.91	19.44	12.70
SFCB - 8 - 8N	1/2	1/2	10.41	1-1/16	15/16	7/8	22.86	56.38	31.75	66.54	41.91	19.44	12.70
SFCB - 12 - 12N	3/4	3/4	15.74	1-1/4	1-3/16	1-1/8	24.38	63.60	37.33	73.51	47.49	25.79	16.76

* ISO Tapered Threads are available upon request

Connects Metric Tubes To Male NPT Thread

Part No.	Tube O.D. D (inch)	T * (NPT)	d Min	Width Across Flat			A	l	l1	L	L1	Panel Hole Drill Size	Panel Max. Thickness
				h	h1	H							
SFCB - 6M - 2N	6	1/8	4.8	15.8	15.8	14	15.3	39.6	27.7	46.90	35.00	11.5	10.2
SFCB - 6M - 4N	6	1/4	4.8	19.0	16.0	14	15.3	44.4	26.2	51.80	33.60	11.5	10.2
SFCB - 8M - 4N	8	1/4	6.3	19.0	17.4	16	16.2	46.7	28.4	53.85	35.55	13.1	11.2
SFCB - 12M - 8N	12	1/2	9.5	27.0	24.0	22	22.8	56.4	31.8	66.50	41.90	19.5	12.7

* ISO Tapered Threads are available upon request

• All dimensions in millimeters unless specified as “inch”. Dimension are for reference only, subject to change

SUE
Union Elbow

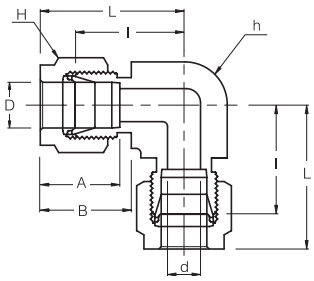

Connects Fractional Tubes

Part No.	Tube O.D. D (inch)	d Min	Width Across Flat		A	B	I	L
			h (inch)	H (inch)				
SUE - 1	1/16	1.27	3/8	5/16	8.63	10.92	14.00	18.03
SUE - 2	1/8	2.28	3/8	7/16	12.70	15.24	15.74	22.35
SUE - 3	3/16	3.04	1/2	1/2	13.71	16.00	18.54	25.14
SUE - 4	1/4	4.82	1/2	9/16	15.24	17.78	20.10	27.40
SUE - 5	5/16	6.35	5/8	5/8	16.25	18.54	22.35	29.71
SUE - 6	3/8	7.11	5/8	11/16	16.76	19.30	23.11	30.48
SUE - 8	1/2	10.41	13/16	7/8	22.86	21.84	25.90	36.06
SUE - 10	5/8	12.70	15/16	1	24.38	21.84	27.94	38.10
SUE - 12	3/4	15.74	1-1/16	1-1/8	24.38	21.84	29.71	39.87
SUE - 14	7/8	18.28	1-3/8	1-1/4	25.90	21.84	34.54	44.70
SUE - 16	1	22.35	1-3/8	1-1/2	31.24	26.41	36.83	49.02
SUE - 20	1-1/4	27.69	1-11/16	1-7/8	41.15	38.86	44.45	66.55
SUE - 24	1-1/2	34.04	2	2-1/4	50.04	45.21	50.80	77.98
SUE - 32	2	45.97	2-3/4	3	67.56	62.74	69.85	107.19

Connects Metric Tubes

Part No.	Tube O.D. D	d Min	Width Across Flat		A	B	I	L
			h	H				
SUE 2M	2	1.7	9.5	12	12.9	15.3	15.7	22.3
SUE - 3M	3	2.4	9.5	12	12.9	15.3	15.7	22.3
SUE - 4M	4	2.4	12.7	12	13.7	16.1	18.8	25.4
SUE - 6M	6	4.8	12.7	14	15.3	17.7	19.6	27.0
SUE - 8M	8	6.4	15.9	16	16.2	18.6	22.4	29.9
SUE - 10M	10	7.9	17.5	19	17.2	19.5	23.9	31.5
SUE - 12M	12	9.5	20.6	22	22.8	22.0	25.9	36.0
SUE - 15M	15	11.9	23.8	25	24.4	22.0	27.9	38.8
SUE - 16M	16	12.7	23.8	25	24.4	22.0	27.9	38.0
SUE - 18M	18	15.1	27.0	30	24.4	22.0	29.7	39.8
SUE - 20M	20	15.9	34.9	32	26.0	22.0	34.5	44.6
SUE - 22M	22	18.3	34.9	32	26.0	22.0	34.5	44.6
SUE - 25M	25	21.8	34.9	38	31.3	26.5	36.8	49.1
SUE - 28M	28	21.8	41	46	36.6	36.6	43.2	64.0
SUE - 30M	30	26.2	42.9	50	39.6	39.2	48.3	69.9
SUE - 32M	32	28.6	42.9	50	42.0	41.6	49.3	72.3
SUE - 38M	38	33.7	55	60	49.4	47.9	56.4	84.0

• All dimensions in millimeters unless specified as “inch”. Dimension are for reference only, subject to change

SME

Male Elbow

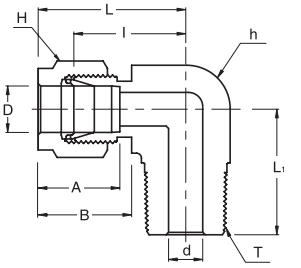

Connects Metric Tubes To Female NPT Thread

Part No.	Tube O.D. D	T (NPT)	d Min	Width Across Flat		A	B	I	L	L_1
				h	H					
SME - 3M - 2N	3	1/8	2.4	12.7	12	12.9	15.3	17.0	23.6	17.8
SME - 3M - 4N	3	1/4	2.4	12.7	12	12.9	15.3	18.0	24.6	23.4
SME - 4M - 2N	4	1/8	2.4	12.7	12	13.7	16.1	18.8	25.4	18.8
SME - 4M - 4N	4	1/4	2.4	12.7	12	13.7	16.1	18.8	25.4	23.4
SME - 6M - 2N	6	1/8	4.8	12.7	14	15.3	17.7	19.6	27.0	18.8
SME - 6M - 4N	6	1/4	4.8	12.7	14	15.3	17.7	19.6	27.0	23.4
SME - 6M - 6N	6	3/8	4.8	15.9	14	15.3	17.7	22.4	29.8	26.2
SME - 6M - 8N	6	1/2	4.8	20.6	14	15.3	17.7	24.4	31.8	33.0
SME - 8M - 2N	8	1/8	4.8	14.3	16	16.2	18.6	21.3	28.8	19.8
SME - 8M - 4N	8	1/4	6.4	14.3	16	16.2	18.6	21.3	28.8	24.4
SME - 8M - 6N	8	3/8	6.4	15.9	16	16.2	18.6	23.1	30.6	26.2
SME - 8M - 8N	8	1/2	6.4	20.6	16	16.2	18.6	25.1	32.6	33.0
SME - 10M - 2N	10	1/8	4.8	17.5	19	17.2	19.5	23.9	31.5	21.6
SME - 10M - 4N	10	1/4	7.1	17.5	19	17.2	19.5	23.9	31.5	26.2
SME - 10M - 6N	10	3/8	7.9	17.5	19	17.2	19.5	23.9	31.5	26.2
SME - 10M - 8N	10	1/2	7.9	20.6	19	17.2	19.5	25.9	33.5	33.0
SME - 12M - 4N	12	1/4	7.1	20.6	22	22.8	22.0	25.9	36.0	28.2
SME - 12M - 6N	12	3/8	9.5	20.6	22	22.8	22.0	25.9	36.0	28.2
SME - 12M - 8N	12	1/2	9.5	20.6	22	22.8	22.0	25.9	36.0	33.0
SME - 12M - 12N	12	3/4	9.5	27.0	22	22.8	22.0	29.7	39.8	36.8
SME - 16M - 6N	16	3/8	9.5	23.8	25	24.4	22.0	27.9	38.0	30.2
SME - 16M - 8N	16	1/2	11.9	23.8	25	24.4	22.0	27.9	38.0	35.1
SME - 16M - 12N	16	3/4	12.7	27.0	25	24.4	22.0	29.7	39.8	36.8
SME - 18M - 8N	18	1/2	11.9	27.0	30	24.4	22.0	29.7	39.8	36.8
SME - 18M - 12N	18	3/4	15.1	27.0	30	24.4	22.0	29.7	39.8	36.8
SME - 20M - 8N	20	1/2	11.9	34.9	32	26.0	22.0	34.5	44.6	41.7
SME - 20M - 12N	20	3/4	15.9	34.9	32	26.0	22.0	34.5	44.6	41.7
SME - 22M - 12N	22	3/4	15.9	34.9	32	26.0	22.0	34.5	44.6	41.7
SME - 22M - 16N	22	1	18.3	34.9	32	26.0	22.0	34.5	44.6	46.5
SME - 25M - 12N	25	3/4	15.9	34.9	38	31.3	26.5	36.8	49.1	41.7
SME - 25M - 16N	25	1	21.8	34.9	38	31.3	26.5	36.8	49.1	46.5
SME - 30M - 20N	30	1-1/4	26.2	42.9	50	39.6	39.2	48.3	69.9	53.1
SME - 32M - 20N	32	1-1/4	27.8	42.9	50	42.0	41.6	49.3	72.3	53.1
SME - 38M - 24N	38	1-1/2	33.7	55	60	49.4	47.9	56.4	84.0	60.4

• All dimensions in millimeters unless specified as “inch”. Dimension are for reference only, subject to change

SME

Male Elbow

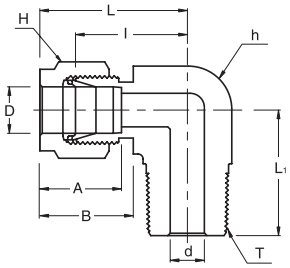

Connects Metric Tubes To Female ISO Tapered Thread

Part No.	Tube O.D. D	T R (PT)	d Min	Width Across Flat		A	B	I	L	L_1
				h	H					
SME - 3M - 2R	3	1/8	2.4	12.7	12	12.9	15.3	17.0	23.6	17.8
SME - 3M - 4R	3	1/4	2.4	12.7	12	12.9	15.3	18.0	24.6	23.4
SME - 4M - 2R	4	1/8	2.4	12.7	12	13.7	16.1	18.8	25.4	18.8
SME - 4M - 4R	4	1/4	2.4	12.7	12	13.7	16.1	18.8	25.4	23.4
SME - 6M - 2R	6	1/8	4.8	12.7	14	15.3	17.7	19.6	27.0	18.8
SME - 6M - 4R	6	1/4	4.8	12.7	14	15.3	17.7	19.6	27.0	23.4
SME - 6M - 6R	6	3/8	4.8	15.9	14	15.3	17.7	22.4	29.8	26.2
SME - 6M - 8R	6	1/2	4.8	20.6	14	15.3	17.7	24.4	31.8	33.0
SME - 8M - 2R	8	1/8	4.8	14.3	16	16.2	18.6	21.3	28.8	19.8
SME - 8M - 4R	8	1/4	6.4	14.3	16	16.2	18.6	21.3	28.8	24.4
SME - 8M - 6R	8	3/8	6.4	15.9	16	16.2	18.6	23.1	30.6	26.2
SME - 8M - 8R	8	1/2	6.4	20.6	16	16.2	18.6	25.1	32.6	33.0
SME - 10M - 4R	10	1/4	7.1	17.5	19	17.2	19.5	23.9	31.5	26.2
SME - 10M - 6R	10	3/8	7.9	17.5	19	17.2	19.5	23.9	31.5	26.2
SME - 10M - 8R	10	1/2	7.9	20.6	19	17.2	19.5	25.9	33.5	33.0
SME - 12M - 2R	12	1/8	4.8	20.6	22	22.8	22.0	25.9	36.0	23.6
SME - 12M - 4R	12	1/4	7.1	20.6	22	22.8	22.0	25.9	36.0	28.2
SME - 12M - 6R	12	3/8	9.5	20.6	22	22.8	22.0	25.9	36.0	28.2
SME - 12M - 8R	12	1/2	9.5	20.6	22	22.8	22.0	25.9	36.0	33.0
SME - 12M - 12R	12	3/4	9.5	27.0	22	22.8	22.0	29.7	39.8	36.8
SME - 16M - 6R	16	3/8	9.5	23.8	25	24.4	22.0	27.9	38.0	30.2
SME - 16M - 8R	16	1/2	11.9	23.8	25	24.4	22.0	27.9	38.0	35.1
SME - 18M - 8R	18	1/2	11.9	27.0	30	24.4	22.0	29.7	39.8	36.8
SME - 18M - 12R	18	3/4	15.1	27.0	30	24.4	22.0	29.7	39.8	36.8
SME - 20M - 8R	20	1/2	11.9	34.9	32	26.0	22.0	34.5	44.6	41.7
SME - 20M - 12R	20	3/4	15.9	34.9	32	26.0	22.0	34.5	44.6	41.7
SME - 22M - 12R	22	3/4	15.9	34.9	32	26.0	22.0	34.5	44.6	41.7
SME - 22M - 16R	22	1	18.3	34.9	32	26.0	22.0	34.5	44.6	46.5
SME - 25M - 12R	25	3/4	15.9	34.9	38	31.3	26.5	36.8	49.1	41.7
SME - 25M - 16R	25	1	21.8	34.9	38	31.3	26.5	36.8	49.1	46.5

• All dimensions in millimeters unless specified as “inch”. Dimension are for reference only, subject to change

SME

Male Elbow

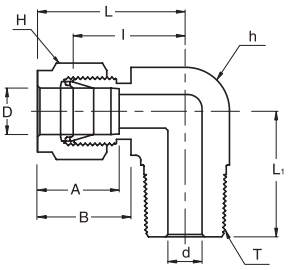

Connects Fractional Tube To Female NPT Thread

Part No.	Tube O.D. D (inch)	T (NPT)	d Min	Width Across Flat		A	B	I	L	L1
				h (inch)	H (inch)					
SME - 2 - 2N	1/8	1/8	2.28	1/2	7/16	12.70	15.24	18.00	24.30	18.80
SME - 2 - 4N	1/8	1/4	2.28	1/2	7/16	12.70	15.24	18.00	24.30	23.36
SME - 3 - 2N	3/16	1/8	3.04	1/2	1/2	13.71	16.00	18.79	25.40	18.79
SME - 3 - 4N	3/16	1/4	3.04	1/2	1/2	13.71	16.00	18.79	25.40	23.36
SME - 4 - 2N	1/4	1/8	4.82	1/2	9/16	15.24	17.78	19.55	26.92	18.79
SME - 4 - 4N	1/4	1/4	4.82	1/2	9/16	15.24	17.78	19.55	26.92	23.36
SME - 4 - 6N	1/4	3/8	4.82	5/8	9/16	15.24	17.78	22.35	29.71	26.16
SME - 4 - 8N	1/4	1/2	4.82	13/16	9/16	15.24	17.78	24.38	31.75	33.02
SME - 5 - 2N	5/16	1/8	4.82	9/16	5/8	16.25	18.54	21.33	28.70	19.81
SME - 5 - 4N	5/16	1/4	6.35	9/16	5/8	16.25	18.54	21.33	28.70	24.38
SME - 5 - 6N	5/16	3/8	6.35	11/16	5/8	16.25	18.54	23.11	30.48	26.16
SME - 6 - 2N	3/8	1/8	4.82	5/8	11/16	16.76	19.30	23.11	30.48	20.82
SME - 6 - 4N	3/8	1/4	7.11	5/8	11/16	16.76	19.30	23.11	30.48	25.40
SME - 6 - 6N	3/8	3/8	7.11	5/8	11/16	16.76	19.30	23.87	31.24	26.16
SME - 6 - 8N	3/8	1/2	7.11	13/16	11/16	16.76	19.30	25.90	33.27	33.02
SME - 6 - 12N	3/8	3/4	7.11	1-1/16	11/16	16.76	19.30	29.71	37.08	36.83
SME - 8 - 4N	1/2	1/4	7.11	13/16	7/8	22.86	21.84	25.90	36.06	28.19
SME - 8 - 6N	1/2	3/8	9.65	13/16	7/8	22.86	21.84	25.90	36.06	28.19
SME - 8 - 8N	1/2	1/2	10.41	13/16	7/8	22.86	21.84	25.90	36.06	33.02
SME - 8 - 12N	1/2	3/4	10.41	1-1/16	7/8	22.86	21.84	29.71	39.87	36.83
SME - 10 - 6N	5/8	3/8	9.65	15/16	1	24.38	21.84	27.94	38.10	30.22
SME - 10 - 8N	5/8	1/2	11.93	15/16	1	24.38	21.84	27.94	38.10	35.10
SME - 10 - 12N	5/8	3/4	12.70	1-1/16	1	24.38	21.84	29.71	39.87	36.83
SME - 12 - 8N	3/4	1/2	11.93	1-1/16	1-1/8	24.38	21.84	29.71	39.87	36.83
SME - 12 - 12N	3/4	3/4	15.74	1-1/16	1-1/8	24.38	21.84	29.71	39.87	36.83
SME - 14 - 12N	7/8	3/4	15.74	1-3/8	1-1/4	25.90	21.84	34.54	44.70	41.65
SME - 16 -1 2N	1	3/4	15.74	1-3/8	1-1/2	31.24	26.41	36.83	49.02	41.65
SME - 16 - 16N	1	1	22.35	1-3/8	1-1/2	31.24	26.41	36.83	49.02	46.48
SME - 20 - 20N	1-1/4	1-1/4	27.69	1-11/16	1-7/8	41.15	38.86	44.45	66.55	47.75
SME - 24 - 24N	1-1/2	1-1/2	34.04	2	2-1/4	50.04	45.21	50.80	77.98	60.45
SME - 32 - 32N	2	2	45.97	2-3/4	3	67.56	62.74	69.85	107.19	70.61

• All dimensions in millimeters unless specified as “inch”. Dimension are for reference only, subject to change

SME
Male Elbow

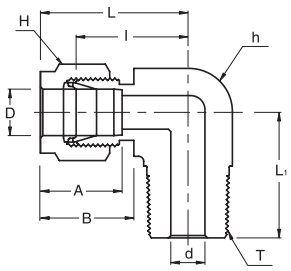

Connects Fractional Tubes To Female ISO Tapered Thread

Part No.	Tube O.D. D (inch)	T R (PT)	d Min	Width Across Flat		A	B	I	L	L_1
				h (inch)	H (inch)					
SME - 4 - 2R	1/4	1/8	4.82	1/2	9/16	15.24	17.78	19.55	26.92	18.79
SME - 4 - 4R	1/4	1/4	4.82	1/2	9/16	15.24	17.78	19.55	26.92	23.36
SME - 4 - 6R	1/4	3/8	4.82	5/8	9/16	15.24	17.78	22.35	29.71	26.16
SME - 4 - 8R	1/4	1/2	4.82	13/16	9/16	15.24	17.78	24.38	31.75	33.02
SME - 5 - 4R	5/16	1/4	6.35	9/16	5/8	16.25	18.54	21.33	28.70	24.38
SME - 6 - 4R	3/8	1/4	7.11	5/8	11/16	16.76	19.30	23.11	30.48	25.40
SME - 6 - 6R	3/8	3/8	7.11	5/8	11/16	16.76	19.30	23.87	31.24	26.16
SME - 8 - 6R	1/2	3/8	9.65	13/16	7/8	22.86	21.84	25.91	36.07	28.20
SME - 8 - 8R	1/2	1/2	10.41	13/16	7/8	22.86	21.84	25.91	36.07	33.02

SHME
45° Male Elbow

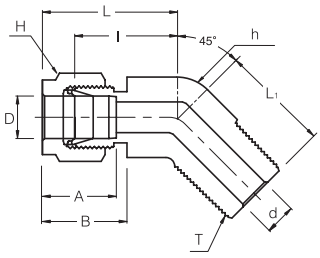

Connects Fractional Tubes To Female NPT Thread

Part No.	Tube O.D. D (inch)	T * (NPT)	d Min	Width Across Flat		A	B	I	L	L_1
				h (inch)	H (inch)					
SHME - 4 - 2N	1/4	1/8	4.82	1/2	9/16	15.24	17.78	17.27	24.63	16.51
SHME - 4 - 4N	1/4	1/4	4.82	1/2	9/16	15.24	17.78	17.27	24.63	21.08
SHME - 6 - 2N	3/8	1/8	4.82	5/8	11/16	16.76	19.30	20.57	27.94	18.28
SHME - 6 - 4N	3/8	1/4	7.11	5/8	11/16	16.76	19.30	20.57	27.94	22.86
SHME - 6 - 6N	3/8	3/8	7.11	13/16	11/16	16.76	19.30	21.84	29.21	24.13
SHME - 8 - 6N	1/2	3/8	9.65	13/16	7/8	22.86	21.84	21.84	32.00	24.13
SHME - 8 - 8N	1/2	1/2	10.41	13/16	7/8	22.86	21.84	21.84	32.00	28.95

* ISO Tapered Threads are available upon request

• All dimensions in millimeters unless specified as “inch”. Dimension are for reference only, subject to change

SPHME

45° Positionable Male Elbow

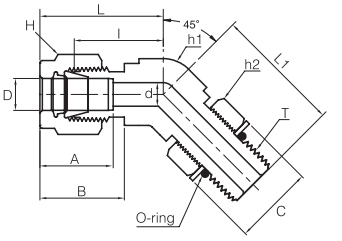

Connects Fractional Tubes To SAE/MS Straight Thread

Part No.	Tube O.D. D (inch)	T (U)	d Min	Width Across Flat			A	B	I	L	L1	C
				h1(inch)	h2(inch)	H(inch)						
SPHME - 4 - 4U	1/4	7/16-20	4.83	1/2	9/16	9/16	15.24	17.78	18.29	25.64	25.65	16.51
SPHME - 6 - 6U	3/8	9/16-18	7.11	5/8	11/16	11/16	16.76	19.30	20.57	27.94	28.19	20.07
SPHME - 8 - 8U	1/2	3/4-16	10.41	13/16	7/8	7/8	22.86	21.84	21.84	32.00	32.26	25.65
SPHME - 12 - 12U	3/4	1-1/16-12	15.75	1-1/8	1-1/4	1-1/8	24.38	24.84	29.72	39.88	47.24	36.58
SPHME - 16 - 16U	1	1-5/16-12	22.35	1-3/8	1-1/2	1-1/2	31.24	26.42	35.31	47.50	50.55	43.94

SPME

Positionable Male Elbow

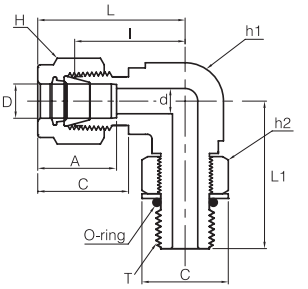

Connects Fractional Tubes To SAE/MS Straight Thread

Part No.	Tube O.D. D (inch)	T (U)	d Min	Width Across Flat			A	B	I	L	L1	C
				h1(inch)	h2(inch)	H(inch)						
SPME - 4 - 4U	1/4	7/16-20	4.83	1/2	9/16	9/16	15.24	17.78	21.08	28.45	28.45	16.51
SPME - 4 - 6U	1/4	9/16-18	4.83	5/8	11/16	9/16	15.24	17.78	23.11	30.48	32.26	20.07
SPME - 5 - 5U	5/16	1/2-20	5.84	9/16	5/8	5/8	16.26	18.54	23.60	30.23	29.46	18.29
SPME - 6 - 6U	3/8	9/16-18	7.11	5/8	11/16	11/16	16.76	19.30	24.64	32.00	32.26	20.07
SPME - 6 - 8U	3/8	3/4-16	7.11	13/16	7/8	11/16	16.76	19.30	27.43	34.80	37.85	25.65
SPME - 8 - 8U	1/2	3/4-16	10.41	13/16	7/8	7/8	22.86	21.84	27.43	37.59	37.85	25.65
SPME - 10 - 10U	5/8	7/8-14	12.70	15/16	1	1	24.38	21.84	27.90	39.62	43.43	29.46
SPME - 12 - 12U	3/4	1-1/16-12	15.75	1-1/16	1-1/4	1-1/8	24.38	21.84	29.70	41.40	48.77	36.58
SPME - 14 - 14U	7/8	3/16-12	18.29	1-3/16	1-3/8	1-1/4	25.91	21.84	33.02	43.18	50.55	40.39
SPME - 16 - 16U	1	1-5/16-12	22.35	1-3/8	1-1/2	1-1/2	31.24	26.42	36.80	50.55	53.59	43.94
SPME - 20 - 20U	1-1/4	1-5/8-12	27.69	1-11/16	1-7/8	1-7/8	41.15	38.86	45.72	67.82	58.17	54.86
SPME - 24 - 24U	1-1/2	1-7/8-12	34.04	2	2-1/8	2-1/4	50.04	45.21	50.80	77.98	60.45	62.23
SPME - 32 - 32U	2	2-1/2-12	45.97	2-3/4	2-3/4	3	67.56	62.74	69.85	107.19	71.63	80.26

• All dimensions in millimeters unless specified as “inch”. Dimension are for reference only, subject to change

SPME

Positionable Male Elbow

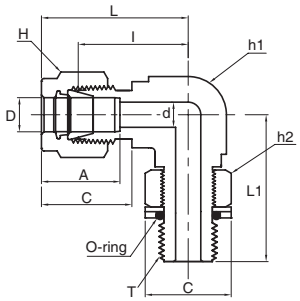

Connects Fractional Tubes To Female ISO Parallel Thread

Part No.	Tube O.D. D (inch)	T (PF)	d Min	Width Across Flat			A	B	I	L	L1	C
				h1(inch)	h2(inch)	H(inch)						
SPME - 4 - 2G	1/4	1/8	4.06	1/2	9/16	9/16	15.24	17.78	19.56	26.92	26.42	17.27
SPME - 4 - 4G	1/4	1/4	4.83	5/8	3/4	9/16	15.24	17.78	21.59	28.96	32.26	22.86
SPME - 6 - 4G	3/8	1/4	5.84	5/8	3/4	11/16	16.76	19.30	23.60	30.48	32.26	22.86
SPME - 6 - 6G	3/8	3/8	7.11	13/16	7/8	11/16	16.76	19.30	25.91	33.27	37.08	26.42
SPME - 8 - 4G	1/2	1/4	5.84	13/16	3/4	7/8	22.86	21.84	25.91	36.07	35.05	26.42
SPME - 8 - 6G	1/2	3/8	7.87	13/16	7/8	7/8	22.86	21.84	25.91	36.07	37.08	22.86
SPME - 8 - 8G	1/2	1/2	10.41	15/16	1-1/16	7/8	22.86	21.84	27.94	38.10	43.43	26.42
SPME - 10 - 8G	5/8	1/2	11.94	15/16	1-1/16	1	24.38	21.84	27.94	38.10	43.43	32.00
SPME - 12 - 8G	3/4	1/2	11.94	1-1/16	1-1/16	1-1/8	24.38	21.84	29.72	39.88	45.21	32.00
SPME - 12 - 12G	3/4	3/4	15.75	1-1/16	1-3/8	1-1/8	24.38	21.84	29.72	39.88	48.77	41.15
SPME - 16 - 12G	1	3/4	15.75	1-3/8	1-3/8	1-1/2	31.24	26.42	36.83	49.02	53.34	41.15
SPME - 16 - 16G	1	1	19.81	1-3/8	1-5/8	1-1/2	31.24	26.42	36.83	49.02	53.59	48.51

Connects Metric Tubes To Female ISO Parallel Thread

Part No.	Tube O.D. D	T (PF)	d Min	Width Across Flat			A	B	I	L	L1	C
				h1(inch)	h2(inch)	H						
SPME - 6M - 2G	6	1/8	4.0	1/2	9/16	14	15.3	17.7	19.6	27.0	26.4	17.3
SPME - 6M - 4G	6	1/4	4.8	5/8	3/4	14	15.3	17.7	21.6	29.0	32.3	22.9
SPME - 8M - 2G	8	1/8	4.0	9/16	9/16	16	16.2	18.6	21.3	28.8	27.4	17.3
SPME - 8M - 4G	8	1/4	5.9	5/8	3/4	16	16.2	18.6	22.4	29.9	32.2	22.9
SPME - 10M - 4G	10	1/4	5.9	13/16	3/4	19	17.2	19.5	25.9	33.5	35.0	22.9
SPME - 10M - 6G	10	3/8	7.9	13/16	7/8	19	17.2	19.5	25.9	33.5	37.1	26.4
SPME - 12M - 4G	12	1/4	5.9	13/16	3/4	22	22.8	22.0	25.9	36.0	35.0	22.9
SPME - 12M - 6G	12	3/8	7.9	13/16	7/8	22	22.8	22.0	25.9	36.0	37.1	26.4
SPME - 12M - 8G	12	1/2	9.5	15/16	1-1/16	22	22.8	22.0	27.9	38.0	43.4	32.0
SPME - 12M - 12G	12	3/4	9.5	1-1/16	1-3/8	22	22.8	22.0	29.7	39.8	48.8	41.1

• All dimensions in millimeters unless specified as “inch”. Dimension are for reference only, subject to change

SFE

Female Elbow

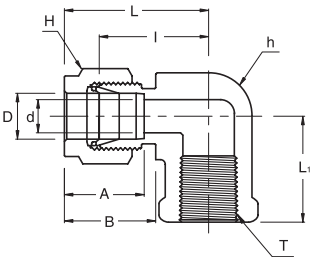

Connects Fractional Tubes To Male NPT Thread

Part No.	Tube O.D. D (inch)	T * (NPT)	d Min	Width Across Flat		A	B	I	L	L_1
				h (inch)	H (inch)					
SFE - 2 - 2N	1/8	1/8	2.28	1/2	7/16	12.70	15.24	18.03	24.63	23.40
SFE - 2 - 4N	1/8	1/4	2.28	11/16	7/16	12.70	15.24	20.82	27.43	29.00
SFE - 3 - 2N	3/16	1/8	3.04	1/2	1/2	13.71	16.00	18.79	25.40	23.40
SFE - 4 - 2N	1/4	1/8	4.82	1/2	9/16	15.24	17.78	19.55	26.92	23.40
SFE - 4 - 4N	1/4	1/4	4.82	11/16	9/16	15.24	17.78	22.35	29.71	29.00
SFE - 4 - 6N	1/4	3/8	4.82	13/16	9/16	15.24	17.78	24.38	31.75	22.35
SFE - 4 - 8N	1/4	1/2	4.82	1	9/16	15.24	17.78	27.17	34.54	37.00
SFE - 5 - 2N	5/16	1/8	6.35	9/16	5/8	16.25	18.54	21.33	28.70	19.05
SFE - 5 - 4N	5/16	1/4	6.35	11/16	5/8	16.25	18.54	23.11	30.48	29.00
SFE - 6 - 2N	3/8	1/8	7.11	5/8	11/16	16.76	19.30	23.11	30.48	19.05
SFE - 6 - 4N	3/8	1/4	7.11	11/16	11/16	16.76	19.30	23.87	31.24	29.00
SFE - 6 - 6N	3/8	3/8	7.11	13/16	11/16	16.76	19.30	25.90	33.27	22.35
SFE - 6 - 8N	3/8	1/2	7.11	1	11/16	16.76	19.30	28.70	36.06	37.00
SFE - 8 - 4N	1/2	1/4	10.41	13/16	7/8	22.86	21.84	25.90	36.06	22.35
SFE - 8 - 6N	1/2	3/8	10.41	13/16	7/8	22.86	21.84	25.90	36.06	22.35
SFE - 8 - 8N	1/2	1/2	10.41	1	7/8	22.86	21.84	28.70	38.86	37.00
SFE - 10 - 6N	5/8	3/8	12.70	15/16	1	24.38	21.84	27.94	38.10	22.35
SFE - 10 - 8N	5/8	1/2	12.70	1-1/16	1	24.38	21.84	29.71	39.87	28.44
SFE - 12 - 8N	3/4	1/2	15.74	1-1/16	1-1/8	24.38	21.84	29.71	39.87	28.44
SFE - 12 - 12N	3/4	3/4	15.74	1-3/8	1-1/8	24.38	21.84	34.54	44.70	31.75
SFE - 14 - 12N	7/8	3/4	18.28	1-3/8	1-1/4	25.90	21.84	34.54	44.70	31.75
SFE - 16 - 12N	1	3/4	22.35	1-3/8	1-1/2	31.24	26.41	36.83	49.02	31.75
SFE - 16 - 16N	1	1	22.35	1-11/16	1-1/2	31.24	26.41	41.40	53.59	38.10

* ISO Tapered Threads are available upon request

Connects Metric Tubes To Male NPT Thread

Part No.	Tube O.D. D	T * (NPT)	d Min	Width Across Flat		A	B	I	L	L_1
				h	H					
SFE - 6M - 4N	6	1/4	4.8	17.46	14	15.3	17.7	22.4	29.8	22.40
SFE - 6M - 6N	6	3/8	4.8	20.63	14	15.3	17.7	24.4	31.7	22.40
SFE - 6M - 8N	6	1/2	4.8	25.40	14	15.3	17.7	27.2	34.6	37.00
SFE - 8M - 4N	8	1/4	6.4	17.46	16	16.2	18.6	23.1	30.6	29.00
SFE - 8M - 8N	8	1/2	6.4	25.40	16	16.2	18.6	28.0	35.2	37.00
SFE - 10M - 4N	10	1/4	7.9	17.46	19	17.2	19.5	25.9	33.5	29.00
SFE - 10M - 6N	10	3/8	7.9	20.63	19	17.2	19.5	25.9	33.5	22.40
SFE - 10M - 8N	10	1/2	7.9	25.40	19	17.2	19.5	28.7	36.1	37.00
SFE - 12M - 6N	12	3/8	9.5	20.63	22	22.8	22.0	25.9	36.2	22.35
SFE - 12M - 8N	12	1/2	9.5	25.40	22	22.8	22.0	28.7	38.8	37.00

* ISO Tapered Threads are available upon request

• All dimensions in millimeters unless specified as “inch”. Dimension are for reference only, subject to change

SUT

Union Tee

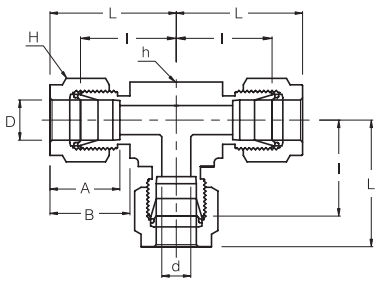

Connects Fractional Tubes

Part No.	Tube O.D. D (inch)	d Min	Width Across Flat		A	B	I	L
			h (inch)	H (inch)				
SUT - 1	1/16	1.27	3/8	5/16	8.63	10.92	14.00	18.03
SUT - 2	1/8	2.28	3/8	7/16	12.70	15.24	15.80	22.35
SUT - 3	3/16	3.04	1/2	1/2	13.71	16.00	18.54	25.14
SUT - 4	1/4	4.82	1/2	9/16	15.24	17.78	20.10	27.40
SUT - 5	5/16	6.35	5/8	5/8	16.25	18.54	22.35	29.71
SUT - 6	3/8	7.11	5/8	11/16	16.76	19.30	23.11	30.48
SUT - 8	1/2	10.41	13/16	7/8	22.86	21.84	25.90	36.06
SUT - 10	5/8	12.70	1	1	24.38	21.84	28.70	38.86
SUT - 12	3/4	15.74	1-1/16	1-1/8	24.38	21.84	29.71	39.87
SUT - 14	7/8	18.28	1-3/8	1-1/4	25.90	21.84	34.54	44.70
SUT - 16	1	22.35	1-3/8	1-1/2	31.24	26.41	36.83	49.02
SUT - 20	1-1/4	27.69	1-11/16	1-7/8	41.15	38.86	44.45	66.55
SUT - 24	1-1/2	34.04	2	2-1/4	50.04	45.21	50.80	77.98
SUT - 32	2	45.97	2-3/4	3	67.56	62.74	69.85	107.19

Connects Metric Tubes

Part No.	Tube O.D. D	d Min	Width Across Flat		A	B	I	L
			h	H				
SUT - 2M	2	1.7	9.5	12	12.9	15.3	15.7	22.3
SUT - 3M	3	2.4	9.5	12	12.9	15.3	15.7	22.3
SUT - 4M	4	2.4	12.7	12	13.7	16.1	18.8	25.4
SUT - 6M	6	4.8	12.7	14	15.3	17.7	19.6	27.0
SUT - 8M	8	6.4	15.9	16	16.2	18.6	22.4	29.9
SUT - 10M	10	7.9	17.5	19	17.2	19.5	23.9	31.5
SUT - 12M	12	9.5	20.6	22	22.8	22.0	25.9	36.0
SUT - 15M	15	11.9	25.4	25	24.4	22.0	28.7	38.8
SUT - 16M	16	12.7	25.4	25	24.4	22.0	28.7	38.8
SUT - 18M	18	15.1	27.0	30	24.4	22.0	29.7	38.8
SUT - 20M	20	15.9	34.9	32	26.0	22.0	34.5	44.6
SUT - 22M	22	18.3	34.9	32	26.0	22.0	34.5	44.6
SUT - 25M	25	21.8	34.9	38	31.3	26.5	36.8	49.1
SUT - 28M	28	21.8	41	46	36.6	36.6	43.2	64.0
SUT - 30M	30	26.2	42.9	50	39.6	39.2	48.3	69.9
SUT - 32M	32	28.6	42.9	50	42.0	41.6	49.3	72.3
SUT - 38M	38	33.7	55	60	49.4	47.9	56.4	84.0

• All dimensions in millimeters unless specified as “inch”. Dimension are for reference only, subject to change

SRUT

Reducing Union Tee

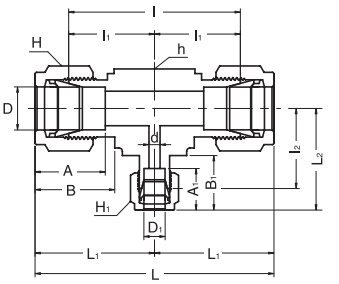

Connects Fractional Tubes

Part No.	Tube O.D.		d Min	Width Across Flat			A	A_1	B	B_1	l	l_1	l_2	L	L_1	L_2
	D (inch)	D_1 (inch)		h (inch)	H (inch)	H_1 (inch)										
SRUT - 6 - 4	3/8	1/4	4.82	5/8	11/16	9/16	16.76	15.24	19.30	17.78	46.22	23.11	21.59	60.96	30.48	28.95
SRUT - 8 - 4	1/2	1/4	4.82	13/16	7/8	9/16	22.86	15.24	21.84	17.78	51.81	25.90	24.38	72.13	36.06	31.75
SRUT - 8 - 6	1/2	3/8	7.11	13/16	7/8	11/16	22.86	16.76	21.84	19.30	51.81	25.90	25.90	72.13	36.06	33.27
SRUT - 10 - 6	5/8	3/8	7.11	1	1	11/16	24.38	16.76	21.84	19.30	57.40	28.70	28.70	77.72	38.86	36.06
SRUT - 12 - 6	3/4	3/8	7.11	1 1/16	1 1/8	11/16	24.38	16.76	21.84	19.30	59.43	29.71	29.71	79.75	39.87	37.08
SRUT - 12 - 8	3/4	1/2	10.41	1 1/16	1 1/8	7/8	24.38	22.86	21.84	21.84	59.43	29.71	29.71	79.75	39.87	39.87
SRUT - 16 - 6	1	3/8	7.11	1 3/8	1 1/2	1 1/16	31.24	16.76	26.41	19.30	73.66	36.83	34.54	98.04	49.02	41.91
SRUT - 16 - 8	1	1/2	10.41	1 3/8	1 1/2	7/8	31.24	21.84	26.41	22.86	73.66	36.83	34.54	98.04	49.02	44.70
SRUT - 16 - 12	1	3/4	15.74	1 3/8	1 1/2	1 1/8	31.24	24.38	26.41	21.84	73.66	36.83	34.54	98.04	49.02	44.70

• All dimensions in millimeters unless specified as “inch”. Dimension are for reference only, subject to change

SMBT

Male Branch Tee

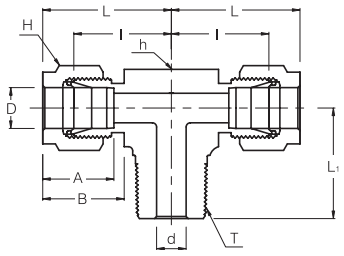

Connects Fractional Tubes To Female NPT Thread

Part No.	Tube O.D. D (inch)	T * (NPT)	d Min	Width Across Flat		A	B	l	L	L_1
				h (inch)	H (inch)					
SMBT - 2 - 2N	1/8	1/8	2.28	1/2	7/16	12.70	15.24	18.30	24.91	18.90
SMBT - 2 - 4N	1/8	1/4	2.28	1/2	7/16	12.70	15.24	18.03	24.63	23.36
SMBT - 3 - 2N	3/16	1/8	3.04	1/2	1/2	13.71	16.00	17.78	25.40	18.79
SMBT - 4 - 2N	1/4	1/8	4.82	1/2	9/16	15.24	17.78	19.55	26.92	18.79
SMBT - 4 - 4N	1/4	1/4	4.82	1/2	9/16	15.24	17.78	19.55	26.92	23.36
SMBT - 5 - 2N	5/16	1/8	4.82	5/8	5/8	16.25	18.54	22.35	29.71	20.82
SMBT - 6 - 4N	3/8	1/4	7.11	5/8	11/16	16.76	19.30	23.11	30.48	25.40
SMBT - 6 - 6N	3/8	3/8	7.11	5/8	11/16	16.76	19.30	23.10	30.48	28.19
SMBT - 8 - 6N	1/2	3/8	9.65	13/16	7/8	22.86	21.84	25.90	36.06	28.19
SMBT - 8 - 8N	1/2	1/2	10.41	13/16	7/8	22.86	21.84	25.90	36.06	33.02
SMBT - 10 - 8N	5/8	1/2	11.93	1	1	24.38	21.84	28.70	38.86	35.81
SMBT - 12 - 12N	3/4	3/4	15.74	1-1/16	1-1/8	24.38	21.84	29.71	39.87	36.83

* ISO Tapered Threads are available upon request

Connects Metric Tubes To Female ISO Tapered Thread

Part No.	Tube O.D. D	T * R (PT)	d Min	Width Across Flat		A	B	l	L	L_1
				h	H					
SMBT - 3M - 2R	3	1/8	2.4	12.7	12	12.9	15.3	17.0	23.6	17.8
SMBT - 3M - 4R	3	1/4	2.4	12.7	12	12.9	15.3	18.0	24.6	23.4
SMBT - 4M - 2R	4	1/8	2.4	12.7	12	13.7	16.1	18.8	25.4	18.8
SMBT - 6M - 2R	6	1/8	4.8	12.7	14	15.3	17.7	19.6	27.0	18.8
SMBT - 6M - 4R	6	1/4	4.8	12.7	14	15.3	17.7	19.6	27.0	23.4
SMBT - 8M - 2R	8	1/8	4.8	15.9	16	16.2	18.6	22.4	29.9	20.8
SMBT - 8M - 4R	8	1/4	6.4	15.9	16	16.2	18.6	22.4	29.9	25.4
SMBT - 10M - 4R	10	1/4	7.1	17.5	19	17.2	19.5	23.9	31.5	28.2
SMBT - 10M - 6R	10	3/8	7.9	17.5	19	17.2	19.5	23.9	31.5	28.2
SMBT - 12M - 4R	12	1/4	7.1	20.6	22	22.8	22.0	25.9	36.0	28.2
SMBT - 12M - 6R	12	3/8	9.5	20.6	22	22.8	22.0	25.9	36.0	28.2
SMBT - 12M - 8R	12	1/2	9.5	20.6	22	22.8	22.0	25.9	36.0	33.0
SMBT - 16M - 6R	16	3/8	9.5	25.4	25	24.4	22.0	27.9	38.0	30.2
SMBT - 16M - 8R	16	1/2	11.9	25.4	25	24.4	22.0	27.9	38.0	35.1
SMBT - 20M - 12R	20	3/4	15.9	31.8	32	26.0	22.0	34.5	44.6	41.7

* NPT Threads are available upon request

• All dimensions in millimeters unless specified as “inch”. Dimension are for reference only, subject to change

SPMBT

Positionable Male Branch Tee

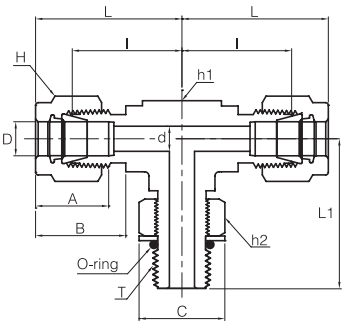

Connects Fractional Tubes To Female ISO Parallel Thread

Part No.	Tube O.D. D (inch)	T (PF)	d Min	Width Across Flat			A	B	I	L	L1	C
				h1(inch)	h2(inch)	H(inch)						
SPMBT - 4 - 2G	1/4	1/8	4.06	1/2	9/16	9/16	15.24	17.78	19.56	26.92	26.42	17.27
SPMBT - 4 - 4G	1/4	1/4	4.83	5/8	3/4	9/16	15.24	17.78	21.59	28.96	32.26	22.86
SPMBT - 6 - 4G	3/8	1/4	5.08	5/8	3/4	11/16	15.24	19.30	23.11	30.48	32.26	22.86
SPMBT - 8 - 6G	3/8	3/8	7.87	13/16	7/8	7/8	22.86	21.84	25.91	36.07	37.08	26.42
SPMBT - 8 - 8G	1/2	1/2	10.41	15/16	1-1/16	7/8	22.86	21.84	27.94	38.10	43.43	32.00
SPMBT - 10 - 8G	5/8	1/2	11.94	15/16	1-1/16	1	24.38	21.84	27.94	38.10	43.43	32.00
SPMBT - 12 - 8G	3/4	1/2	11.94	1-1/16	1-1/16	1-1/8	24.38	21.84	29.72	39.88	45.21	32.00
SPMBT - 12 - 12G	3/4	3/4	15.75	1-1/16	1-3/8	1-1/8	24.38	21.84	29.72	39.88	48.77	41.15
SPMBT - 16 - 16G	1	1	19.81	1-3/8	1-5/8	1-1/2	31.24	26.42	36.83	49.02	53.59	48.51

Connects Metric Tubes To Female ISO Parallel Thread

Part No.	Tube O.D. D	T (PF)	d Min	Width Across Flat			A	B	I	L	L1	C
				h1(inch)	h2(inch)	H						
SPMBT - 6M - 2G	6	1/8	4.0	1/2	9/16	14	15.3	17.7	19.6	27.0	26.4	17.3
SPMBT - 6M - 4G	6	1/4	4.8	5/8	3/4	14	15.3	17.7	21.6	29.0	32.3	22.9
SPMBT - 8M - 2G	8	1/8	4.0	9/16	9/16	16	16.2	18.6	21.3	28.8	27.4	17.3
SPMBT - 8M - 4G	8	1/4	5.9	5/8	3/4	16	16.2	18.6	22.4	29.9	32.2	22.9
SPMBT - 10M - 4G	10	1/4	5.9	13/16	3/4	19	17.2	19.5	25.9	33.5	35.0	22.9
SPMBT - 12M - 6G	10	3/8	7.9	13/16	7/8	22	22.8	22.0	25.9	36.0	37.1	26.4
SPMBT - 12M - 8G	12	1/4	9.5	15/16	1-1/16	22	22.8	22.0	27.9	38.0	35.0	32.0

Connects Fractional Tubes To SAE/MS Straight Thread Boss

Part No.	Tube O.D. D (inch)	T (U)	d Min	Width Across Flat			A	B	I	L	L1	C
				h1(inch)	h2(inch)	H(inch)						
SPMBT - 4 - 4U	1/4	7/16-20	4.83	1/2	9/16	9/16	15.24	17.78	21.08	28.45	28.45	16.51
SPMBT - 6 - 6U	3/8	9/16-18	7.11	5/8	11/16	11/16	16.76	19.30	24.64	32.00	32.26	20.07
SPMBT - 8 - 8U	1/2	3/4-16	10.41	13/16	7/8	7/8	22.86	21.84	27.43	37.59	37.85	25.65
SPMBT - 12 - 12U	3/4	1-1/16-12	15.75	1-1/16	1-1/4	1-1/8	24.38	21.84	31.24	41.40	48.77	36.58
SPMBT - 16 - 16U	1	1-5/16-12	22.35	1-3/8	1-1/2	1-1/2	31.24	26.42	38.35	50.55	53.59	43.94
SPMBT - 20 - 20U	1-1/4	1-5/8-12	27.69	1-11/16	1-7/8	1-7/8	41.15	38.86	45.72	67.82	58.17	54.86
SPMBT - 24 - 24U	1-1/2	1-7/8-12	34.04	2	2-1/8	2-1/4	50.04	45.21	50.80	77.98	60.45	62.23
SPMBT - 32 - 32U	2	2-1/2-12	45.97	2-3/4	2-3/4	3	67.56	62.74	69.85	107.19	71.63	80.26

• All dimensions in millimeters unless specified as “inch”. Dimension are for reference only, subject to change

SMRT

Male Run Tee

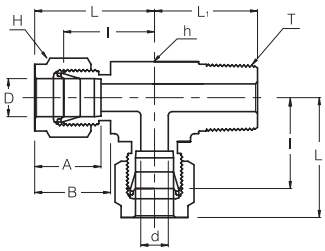

Connects Fractional Tubes To Female NPT Thread

Part No.	Tube O.D. D (inch)	T * (NPT)	d Min	Width Across Flat		A	B	I	L	L_1
				h (inch)	H (inch)					
SMRT - 2 - 2N	1/8	1/8	2.28	1/2	7/16	12.70	15.24	18.30	24.91	18.90
SMRT - 2 - 4N	1/8	1/4	2.28	1/2	7/16	12.70	15.24	18.03	24.63	23.36
SMRT - 3 - 2N	3/16	1/8	3.04	1/2	1/2	13.71	16.00	17.78	25.40	18.79
SMRT - 4 - 2N	1/4	1/8	4.82	1/2	9/16	15.24	17.78	19.55	26.92	18.79
SMRT - 4 - 4N	1/4	1/4	4.82	1/2	9/16	15.24	17.78	19.55	26.92	23.36
SMRT - 5 - 2N	5/16	1/8	4.82	5/8	5/8	16.25	18.54	22.35	29.71	20.82
SMRT - 6 - 4N	3/8	1/4	7.11	5/8	11/16	16.76	19.30	23.11	30.48	25.40
SMRT - 6 - 6N	3/8	3/8	7.11	5/8	11/16	16.76	19.30	23.10	30.48	28.19
SMRT - 8 - 6N	1/2	3/8	9.65	13/16	7/8	22.86	21.84	25.90	36.06	28.19
SMRT - 8 - 8N	1/2	1/2	10.41	13/16	7/8	22.86	21.84	25.90	36.06	33.02
SMRT - 10 - 8N	5/8	1/2	11.93	1	1	24.38	21.84	28.70	38.86	35.81
SMRT - 12 - 12N	3/4	3/4	15.74	1-1/16	1-1/8	24.38	21.84	29.71	39.87	36.83

* ISO Tapered Threads are available upon request

Connects Metric Tubes To Female ISO Tapered Thread

Part No.	Tube O.D. D	T * R (PT)	d Min	Width Across Flat		A	B	I	L	L_1
				h	H					
SMRT - 3M - 2R	3	1/8	2.4	12.7	12	12.9	15.3	17.0	23.6	17.8
SMRT - 3M - 4R	3	1/4	2.4	12.7	12	12.9	15.3	18.0	24.6	23.4
SMRT - 4M - 2R	4	1/8	2.4	12.7	12	13.7	16.1	18.8	25.4	18.8
SMRT - 6M - 2R	6	1/8	4.8	12.7	14	15.3	17.7	19.6	27.0	18.8
SMRT - 6M - 4R	6	1/4	4.8	12.7	14	15.3	17.7	19.6	27.0	23.4
SMRT - 8M - 2R	8	1/8	4.8	15.9	16	16.2	18.6	22.4	29.9	20.8
SMRT - 8M - 4R	8	1/4	6.4	15.9	16	16.2	18.6	22.4	29.9	25.4
SMRT - 10M - 4R	10	1/4	7.1	17.5	19	17.2	19.5	23.9	31.5	28.2
SMRT - 10M - 6R	10	3/8	7.9	17.5	19	17.2	19.5	23.9	31.5	28.2
SMRT - 12M - 4R	12	1/4	7.1	20.6	22	22.8	22.0	25.9	36.0	28.2
SMRT - 12M - 6R	12	3/8	9.5	20.6	22	22.8	22.0	25.9	36.0	28.2
SMRT - 12M - 8R	12	1/2	9.5	20.6	22	22.8	22.0	25.9	36.0	33.0
SMRT - 16M - 6R	16	3/8	9.5	25.4	25	24.4	22.0	27.9	38.0	30.2
SMRT - 16M - 8R	16	1/2	11.9	25.4	25	24.4	22.0	27.9	38.0	35.1
SMRT - 20M - 12R	20	3/4	15.9	31.8	32	26.0	22.0	34.5	44.6	41.7

* NPT Threads are available upon request

• All dimensions in millimeters unless specified as “inch”. Dimension are for reference only, subject to change

SPMRT

Positionable Male Run Tee

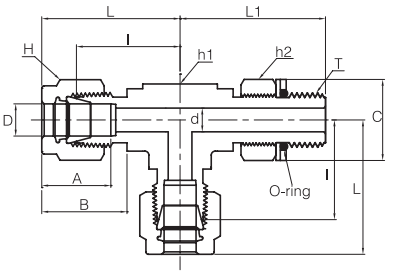

Connects Fractional Tubes To Female ISO Parallel Thread

Part No.	Tube O.D. D (inch)	T (PF)	d Min	Width Across Flat			A	B	I	L	L1	C
				h1(inch)	h2(inch)	H(inch)						
SPMRT - 4 - 2G	1/4	1/8	4.06	1/2	9/16	9/16	15.24	17.78	19.56	26.92	26.42	17.27
SPMRT - 4 - 4G	1/4	1/4	4.83	5/8	3/4	9/16	15.24	17.78	21.59	28.96	32.26	22.86
SPMRT - 6 - 4G	3/8	1/4	5.84	5/8	3/4	11/16	16.76	19.30	23.11	30.48	32.26	22.86
SPMRT - 8 - 6G	1/4	3/8	7.87	13/16	7/8	7/8	22.86	21.84	25.91	36.07	37.08	26.42
SPMRT - 8 - 8G	3/8	1/2	10.41	15/16	1-1/16	7/8	22.86	21.84	27.94	38.10	43.43	32.00
SPMRT - 10 - 8G	1/2	1/2	11.94	15/16	1-1/16	1	24.38	21.84	27.94	38.10	43.43	32.00
SPMRT - 12 - 8G	3/4	1/2	11.94	1-1/16	1-1/16	1-1/8	24.38	21.84	29.72	39.88	45.21	32.00
SPMRT - 12 - 12G	3/4	3/4	15.75	1-1/16	1-3/8	1-1/8	24.38	21.84	29.72	39.88	48.77	41.15
SPMRT - 16 - 16G	1	1	19.81	1-3/8	1-5/8	1-1/2	31.24	26.42	36.83	49.02	53.59	48.51

Connects Metric Tubes To Female ISO Parallel Thread

Part No.	Tube O.D. D	T (PF)	d Min	Width Across Flat			A	B	I	L	L1	C
				h1(inch)	h2(inch)	H						
SPMRT - 6M - 2G	6	1/8	4.0	1/2	9/16	14	15.3	17.7	19.6	27.0	26.4	17.3
SPMRT - 6M - 4G	6	1/4	4.8	5/8	3/4	14	15.3	17.7	21.6	29.0	32.2	22.9
SPMRT - 8M - 2G	8	1/8	4.0	9/16	9/16	16	16.2	18.6	21.3	28.8	27.4	17.3
SPMRT - 8M - 4G	8	1/4	6.4	5/8	3/4	16	16.2	18.6	22.4	29.9	32.2	22.9
SPMRT - 10M - 4G	10	1/4	5.9	13/16	3/4	19	17.2	19.5	25.9	33.5	35.0	22.9
SPMRT - 12M - 6G	10	3/8	7.9	13/16	7/8	22	22.8	22.0	25.9	36.0	37.1	26.4
SPMRT - 12M - 8G	12	1/2	9.5	15/16	1-1/16	22	22.8	22.0	27.9	38.0	43.4	22.9

Connects Fractional Tubes To SAE/MS Straight Thread

Part No.	Tube O.D. D (inch)	T (U)	d Min	Width Across Flat			A	B	I	L	L1	C
				h1(inch)	h2(inch)	H(inch)						
SPMRT - 4 - 4U	1/4	7/16-20	4.83	1/2	9/16	9/16	15.24	17.78	21.08	28.45	28.45	16.51
SPMRT - 6 - 6U	3/8	9/16-18	7.11	5/8	11/16	11/16	16.76	19.30	24.64	32.00	32.26	20.07
SPMRT - 8 - 8U	1/2	3/4-16	10.41	13/16	7/8	7/8	22.86	21.84	27.43	37.59	37.85	25.65
SPMRT - 12 - 12U	3/4	1-1/16-12	15.75	1-1/16	1-1/4	1-1/8	24.38	21.84	31.24	41.40	48.77	36.58
SPMRT - 16 - 16U	1	1-5/16-12	22.35	1-3/8	1-1/2	1-1/2	31.24	26.42	38.35	50.55	53.59	43.94
SPMRT - 20 - 20U	1-1/4	1-5/8-12	27.69	1-11/16	1-7/8	1-7/8	41.15	38.86	45.72	67.82	58.17	54.86
SPMRT - 24 - 24U	1-1/2	1-7/8-12	34.04	2	2-1/8	2-1/4	50.04	45.21	50.80	77.98	60.45	62.23
SPMRT - 32 - 32U	2	2-1/2-12	45.97	2-3/4	2-3/4	3	67.56	62.74	69.85	107.19	71.63	80.26

• All dimensions in millimeters unless specified as “inch”. Dimension are for reference only, subject to change

SFBT

Female Branch Tee

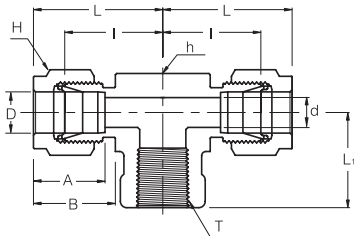

Connects Fractional Tubes To Male NPT Thread

Part No.	Tube O.D. D (inch)	T * (NPT)	d Min	Width Across Flat		A	B	I	L	L_1
				h (inch)	H (inch)					
SFBT - 2 - 2N	1/8	1/8	2.28	1/2	7/16	12.70	15.24	18.03	24.63	19.05
SFBT - 4 - 2N	1/4	1/8	4.82	1/2	9/16	15.24	17.78	19.55	26.92	19.05
SFBT - 4 - 4N	1/4	1/4	4.82	11/16	9/16	15.24	17.78	22.35	29.71	22.35
SFBT - 6 - 4N	3/8	1/4	7.11	11/16	11/16	16.76	19.30	23.87	31.24	22.35
SFBT - 6 - 6N	3/8	3/8	7.11	13/16	11/16	16.76	19.30	25.90	33.27	22.35
SFBT - 6 - 8N	3/8	1/2	7.11	1	11/16	16.76	19.30	28.70	36.07	28.45
SFBT - 8 - 4N	1/2	1/4	10.41	13/16	7/8	22.86	21.84	25.90	36.06	22.35
SFBT - 8 - 6N	1/2	3/8	10.41	13/16	7/8	22.86	21.84	25.90	36.06	22.35
SFBT - 8 - 8N	1/2	1/2	10.41	1	7/8	22.86	21.84	28.70	38.86	28.44
SFBT - 10 - 8N	5/8	1/2	12.70	1	1	24.38	21.84	28.70	38.86	28.44
SFBT - 12 - 12N	3/4	3/4	15.74	1-3/8	1-1/8	24.38	21.84	34.54	44.70	31.75
SFBT - 16 - 12N	1	3/4	22.35	1-3/8	1-1/2	31.24	26.41	36.83	49.02	31.75
SFBT - 16 - 16N	1	1	22.35	1-11/16	1-1/2	31.24	26.41	41.40	53.59	38.10

* ISO Tapered Threads are available upon request

Connects Metric Tubes To Male NPT Thread

Part No.	Tube O.D. D	T * (NPT)	d Min	Width Across Flat		A	B	I	L	L_1
				h	H					
SFBT - 6M - 2N	6	1/8	4.8	12.70	14	15.3	17.7	19.6	27.0	19.0
SFBT - 6M - 4N	6	1/4	4.8	17.46	14	15.3	17.7	22.4	29.8	22.4
SFBT - 6M - 6N	6	3/8	4.8	20.63	14	15.3	17.7	24.4	31.7	22.4
SFBT - 6M - 8N	6	1/2	4.8	25.40	14	15.3	17.7	27.2	34.5	28.4
SFBT - 8M - 2N	8	1/8	6.4	15.87	16	16.2	18.6	22.4	29.9	19.0
SFBT - 8M - 4N	8	1/4	6.4	17.46	16	16.2	18.6	23.1	30.6	22.4
SFBT - 8M - 6N	8	3/8	6.4	20.63	16	16.2	18.6	25.2	32.4	22.4
SFBT - 8M - 8N	8	1/2	6.4	25.40	16	16.2	18.6	28.0	35.2	28.4
SFBT - 10M - 4N	10	1/4	7.9	20.63	19	17.2	19.5	25.9	33.5	22.4
SFBT - 10M - 6N	10	3/8	7.9	20.63	19	17.2	19.5	25.9	33.3	22.4
SFBT - 10M - 8N	10	1/2	9.5	25.40	19	17.2	19.5	26.2	33.6	22.4
SFBT - 12M - 4N	12	1/4	9.5	20.63	22	22.8	22.0	25.9	36.0	22.4
SFBT - 12M - 6N	12	3/8	9.5	20.63	22	22.8	22.0	25.9	36.0	22.4
SFBT - 12M - 8N	12	1/2	9.5	25.40	22	22.8	22.0	29.7	40.0	28.4
SFBT - 16M - 8N	16	1/2	12.7	25.40	25	24.4	22.0	28.7	38.8	28.4

* ISO Tapered Threads are available upon request

• All dimensions in millimeters unless specified as “inch”. Dimension are for reference only, subject to change

SFRT

Female Run Tee

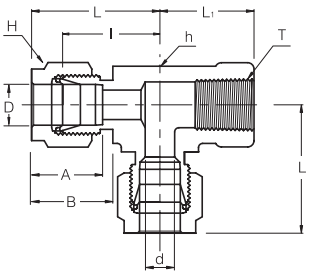

Connects Fractional Tubes To Male NPT Thread

Part No.	Tube O.D. D (inch)	T * (NPT)	d Min	Width Across Flat		A	B	I	L	L1
				h (inch)	H (inch)					
SFRT - 2 - 2N	1/8	1/8	2.28	1/2	7/16	12.70	15.24	18.03	24.63	19.05
SFRT - 4 - 2N	1/4	1/8	4.82	1/2	9/16	15.24	17.78	19.55	26.92	19.05
SFRT - 4 - 4N	1/4	1/4	4.82	11/16	9/16	15.24	17.78	22.35	29.71	22.35
SFRT - 6 - 4N	3/8	1/4	7.11	11/16	11/16	16.76	19.30	23.87	31.24	22.35
SFRT - 8 - 6N	1/2	3/8	10.41	13/16	7/8	22.86	21.84	25.90	36.06	22.35
SFRT - 8 - 8N	1/2	1/2	10.41	1	7/8	22.86	21.84	28.70	39.87	28.44
SFRT - 12 - 12N	3/4	3/4	15.74	1-3/8	1-1/8	24.38	21.84	34.54	44.70	31.75
SFRT - 16 - 12N	1	3/4	22.35	1-3/8	1-1/2	31.24	26.41	36.83	49.02	31.75
SFRT - 16 - 16N	1	1	22.35	1-11/16	1-1/2	31.24	26.41	41.40	53.59	38.10

* ISO Tapered Threads are available upon request

Connects Metric Tubes To Male NPT Thread

Part No.	Tube O.D. D	T * (NPT)	d Min	Width Across Flat		A	B	I	L	L1
				h	H					
SFRT - 6M - 2N	6	1/8	4.8	12.70	14	15.3	17.7	19.6	27.0	19.0
SFRT - 6M - 4N	6	1/4	4.8	17.46	14	15.3	17.7	22.4	29.8	22.4
SFRT - 6M - 8N	6	1/2	4.8	25.40	14	15.3	17.7	27.2	34.5	28.4
SFRT - 8M - 2N	8	1/8	6.4	15.87	16	16.2	18.6	22.4	29.9	19.0
SFRT - 8M - 4N	8	1/4	6.4	17.46	16	16.2	18.6	23.1	30.6	22.4
SFRT - 8M - 6N	8	3/8	6.4	20.63	16	16.2	18.6	25.2	32.4	22.4
SFRT - 8M - 8N	8	1/2	6.4	25.40	16	16.2	18.6	28.0	35.2	28.4
SFRT - 12M - 4N	12	1/4	9.5	20.63	22	22.8	22.0	25.9	33.5	22.4
SFRT - 12M - 6N	12	3/8	9.5	20.63	22	22.8	22.0	25.9	36.0	22.4
SFRT - 12M - 8N	12	1/2	9.5	25.40	22	22.8	22.0	29.7	40.0	28.4
SFRT - 16M - 8N	16	1/2	12.7	25.40	25	24.4	22.0	29.7	39.8	28.4

* ISO Tapered Threads are available upon request

• All dimensions in millimeters unless specified as “inch”. Dimension are for reference only, subject to change

SUC
Union Cross

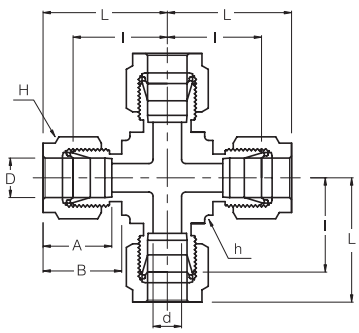

Connects Fractional Tubes

Part No.	Tube O.D. D (inch)	d Min	Width Across Flat		A	B	I	L
			h (inch)	H (inch)				
SUC - 1	1/16	1.27	3/8	5/16	8.63	10.92	14.00	18.03
SUC - 2	1/8	2.28	3/8	7/16	12.70	15.24	15.74	22.35
SUC - 3	3/16	3.04	1/2	1/2	13.71	16.00	18.54	25.14
SUC - 4	1/4	4.82	1/2	9/16	15.24	17.78	19.55	26.92
SUC - 5	5/16	6.35	5/8	5/8	16.25	18.54	22.35	29.71
SUC - 6	3/8	7.11	5/8	11/16	16.76	19.30	23.11	30.48
SUC - 8	1/2	10.41	13/16	7/8	22.86	21.84	25.90	36.06
SUC - 10	5/8	12.70	15/16	1	24.38	21.84	28.70	38.80
SUC - 12	3/4	15.74	1	1-1/8	24.38	21.84	29.71	39.87
SUC - 14	7/8	18.28	1-3/8	1-1/4	25.90	21.84	34.54	44.70
SUC - 16	1	22.35	1-3/8	1-1/2	31.24	26.41	36.83	49.02

Connects Metric Tubes

Part No.	Tube O.D. D	d Min	Width Across Flat		A	B	I	L
			h	H				
SUC - 3M	3	2.4	9.5	12	12.9	15.3	15.7	22.3
SUC - 6M	6	4.8	12.7	14	15.3	17.7	19.6	27.0
SUC - 8M	8	6.4	15.9	16	16.2	18.6	22.4	29.9
SUC - 10M	10	7.9	20.6	19	17.2	19.5	25.9	33.5
SUC - 12M	12	9.5	20.6	22	22.8	22.0	25.9	36.0
SUC - 16M	16	12.7	23.8	25	24.4	22.0	26.9	37.0
SUC - 18M	18	15.1	25.4	30	24.4	22.0	28.2	38.3
SUC - 20M	20	15.9	34.9	32	26.0	22.0	34.5	44.6
SUC - 25M	25	21.8	34.9	38	31.3	26.5	36.8	49.1

• All dimensions in millimeters unless specified as “inch”. Dimension are for reference only, subject to change

SR
Reducer

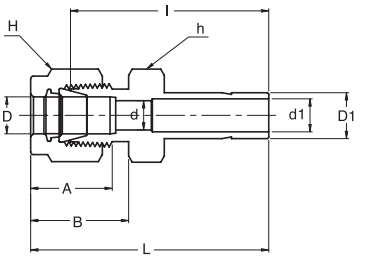

Connects Fractional Tubes To Fractional SUPERLOK® Port

Part No.	Tube O.D.		d Min	d1 Min	Width Across Flat		A	B	I	L
	D (inch)	D1 (inch)			h (inch)	H (inch)				
SR - 2 - 1	1/8	1/16	2.28	0.8	7/16	7/16	12.70	15.24	22.35	28.95
SR - 2 - 2	1/8	1/8	2.28	2.1	7/16	7/16	12.70	15.24	26.92	33.52
SR - 2 - 3	1/8	3/16	2.28	3.0	7/16	7/16	12.70	15.24	27.68	34.29
SR - 2 - 4	1/8	1/16	2.28	4.4	7/16	7/16	12.70	15.24	29.46	36.06
SR - 2 - 6	1/8	1/16	2.28	6.9	7/16	7/16	12.70	15.24	30.98	37.59
SR - 2 - 8	1/8	1/2	2.28	9.4	9/16	7/16	12.70	15.24	37.59	44.19
SR - 3 - 2	3/16	1/8	3.04	2.1	7/16	1/2	13.71	16.00	28.19	34.79
SR - 3 - 4	3/16	1/4	3.04	4.4	7/16	1/2	13.71	16.00	30.48	37.08
SR - 4 - 2	1/4	1/8	4.83	2.1	1/2	9/16	15.24	17.78	29.46	36.83
SR - 4 - 3	1/4	3/16	4.83	3.0	1/2	9/16	15.24	17.78	30.22	37.59
SR - 4 - 4	1/4	1/4	4.83	4.4	1/2	9/16	15.24	17.78	31.75	39.11
SR - 4 - 5	1/4	5/16	4.83	5.6	1/2	9/16	15.24	17.78	32.51	39.87
SR - 4 - 6	1/4	3/8	4.83	6.9	1/2	9/16	15.24	17.78	33.27	40.64
SR - 4 - 8	1/4	1/2	4.83	9.4	9/16	9/16	15.24	17.78	38.86	46.22
SR - 4 - 10	1/4	5/8	4.83	12.0	11/16	9/16	15.24	17.78	40.64	48.00
SR - 4 - 12	1/4	3/4	4.83	14.8	13/16	9/16	15.24	17.78	41.40	47.75
SR - 5 - 6	5/16	3/8	6.35	6.9	9/16	5/8	16.25	18.54	34.54	41.91
SR - 5 - 8	5/16	1/2	6.35	9.4	9/16	5/8	16.25	18.54	40.13	47.49
SR - 6 - 4	3/8	1/4	7.11	4.4	5/8	11/16	16.76	19.30	34.03	41.40
SR - 6 - 6	3/8	3/8	7.11	6.9	5/8	11/16	16.76	19.30	35.81	43.18
SR - 6 - 8	3/8	1/2	7.11	9.4	5/8	11/16	16.76	19.30	41.14	48.51
SR - 6 - 10	3/8	5/8	7.11	12.0	11/16	11/16	16.76	19.30	42.92	50.29
SR - 6 - 12	3/8	3/4	7.11	14.8	13/16	11/16	16.76	19.30	42.92	50.29
SR - 8 - 4	1/2	1/4	10.41	4.4	13/16	7/8	22.86	21.84	34.79	44.95
SR - 8 - 6	1/2	3/8	10.41	6.9	13/16	7/8	22.86	21.84	36.57	46.73
SR - 8 - 8	1/2	1/2	10.41	9.4	13/16	7/8	22.86	21.84	42.16	52.32
SR - 8 - 10	1/2	5/8	10.41	12.0	13/16	7/8	22.86	21.84	43.68	53.84
SR - 8 - 12	1/2	3/4	10.41	14.8	13/16	7/8	22.86	21.84	43.68	53.84
SR - 8 - 16	1/2	1	10.41	20.4	1-1/16	7/8	22.86	21.84	50.03	60.19
SR - 10 - 12	5/8	3/4	12.70	14.8	15/16	1	24.38	21.84	44.45	54.61
SR - 10 - 14	5/8	7/8	12.70	17.0	15/16	1	24.38	21.84	45.97	56.13
SR - 10 - 16	5/8	1	12.70	20.4	1-1/16	1	24.38	21.84	50.80	60.96
SR - 12 - 8	3/4	1/2	15.74	9.4	1-1/16	1-1/8	24.38	21.84	44.45	54.61
SR - 12 - 16	3/4	1	15.74	20.4	1-1/16	1-1/8	24.38	21.84	52.32	62.48

* Fractional Tube to Metric SUPERLOK port are available upon request

• All dimensions in millimeters unless specified as “inch”. Dimension are for reference only, subject to change

SR
Reducer

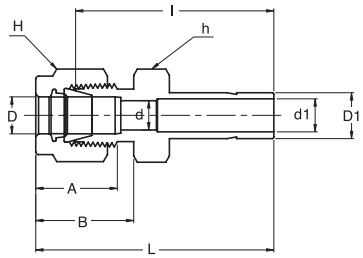

Connects Metric Tubes To Metric SUPERLOK® Port

Part No.	Tube O.D.		d Min	d1 Min	Width Across Flat		A	B	I	L
	D	D_1			h	H				
SR - 3M - 4M	3	4	2.4	2.2	12	12	12.9	15.3	28.4	35.0
SR - 3M - 6M	3	6	2.4	4.1	12	12	12.9	15.3	29.5	36.1
SR - 3M - 10M	3	10	2.4	7.1	14	12	12.9	15.3	31.8	38.4
SR - 4M - 6M	4	6	2.4	4.1	12	12	13.7	16.1	30.5	37.1
SR - 6M - 3M	6	3	4.8	1.8	14	14	15.3	17.7	29.5	36.9
SR - 6M - 8M	6	8	4.8	5.6	14	14	15.3	17.7	32.5	39.9
SR - 6M - 10M	6	10	4.8	7.1	14	14	15.3	17.7	33.3	40.7
SR - 6M - 12M	6	12	4.8	8.8	14	14	15.3	17.7	38.9	46.3
SR - 8M - 6M	8	6	6.4	4.1	15	16	16.2	18.6	32.8	40.3
SR - 8M - 10M	8	10	6.4	7.1	15	16	16.2	18.6	34.5	42.0
SR - 8M - 12M	8	12	6.4	8.8	15	16	16.2	18.6	40.1	47.6
SR - 10M - 6M	10	6	7.9	4.1	18	19	17.2	19.5	34.8	42.4
SR - 10M - 8M	10	8	7.9	5.6	18	19	17.2	19.5	35.8	43.4
SR - 10M - 12M	10	12	7.9	8.8	18	19	17.2	19.5	42.2	49.8
SR - 10M - 15M	10	15	7.9	11.2	18	19	17.2	19.5	43.7	51.3
SR - 10M - 18M	10	18	7.9	13.9	22	19	17.2	19.5	43.7	51.3
SR - 12M - 6M	12	6	9.5	4.1	22	22	22.8	22.0	34.8	44.9
SR - 12M - 8M	12	8	9.5	5.6	22	22	22.8	22.0	35.8	45.9
SR - 12M - 10M	12	10	9.5	7.1	22	22	22.8	22.0	36.6	46.7
SR - 12M - 16M	12	16	9.5	12.0	22	22	22.8	22.0	43.7	53.8
SR - 12M - 18M	12	18	9.5	13.9	22	22	22.8	22.0	43.7	53.8
SR - 12M - 20M	12	20	9.5	15.5	22	22	22.8	22.0	46.0	56.1
SR - 12M - 22M	12	22	9.5	17.9	24	22	22.8	22.0	46.0	56.1
SR - 12M - 25M	12	25	9.5	19.9	27	22	22.8	22.0	52.3	62.4
SR - 16M - 12M	16	12	12.7	8.8	27	25	24.4	22.0	42.9	53.0
SR - 18M - 12M	18	12	15.1	8.8	27	30	24.4	22.0	44.5	54.6
SR - 18M - 16M	18	16	15.1	12.0	27	30	24.4	22.0	46.0	56.1
SR - 18M - 20M	18	20	15.1	15.5	27	30	24.4	22.0	47.5	57.6
SR - 18M - 22M	18	22	15.1	17.9	30	30	24.4	22.0	47.5	57.6
SR - 18M - 25M	18	25	15.1	19.9	30	30	24.4	22.0	52.3	62.4
SR - 20M - 16M	20	16	15.9	12.0	30	32	26.0	22.0	47.8	57.9
SR - 20M - 18M	20	18	15.9	13.9	30	32	26.0	22.0	47.8	57.9
SR - 20M - 22M	20	22	15.9	17.9	30	32	26.0	22.0	49.3	59.4
SR - 20M - 25M	20	25	15.9	19.9	30	32	26.0	22.0	54.1	64.2
SR - 22M - 18M	22	18	18.3	13.9	30	32	26.0	22.0	47.8	57.9
SR - 22M - 20M	22	20	18.3	15.5	30	32	26.0	22.0	49.3	59.4
SR - 22M - 25M	22	25	18.3	19.9	30	32	26.0	22.0	54.1	64.2
SR - 25M - 18M	25	18	21.8	13.9	35	38	31.3	26.5	50.8	63.1
SR - 25M - 20M	25	20	21.8	15.5	35	38	31.3	26.5	52.3	64.6

• All dimensions in millimeters unless specified as “inch”. Dimension are for reference only, subject to change

SR
Reducer

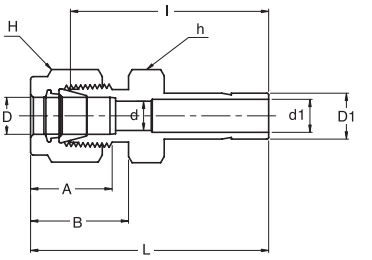

Connects Metric Tubes To Fractional SUPERLOK® Port

Part No.	Tube O.D.		d Min	d1 Min	Width Across Flat		A	B	I	L
	D	D_1 (inch)			h	H				
SR - 3M - 2	3	1/8	2.4	2.1	12	12	12.9	15.3	26.9	33.5
SR - 3M - 4	3	1/4	2.4	4.4	12	12	12.9	15.3	29.5	36.1
SR - 6M - 4	6	1/4	4.8	4.4	14	14	15.3	17.7	31.8	39.2
SR - 6M - 5	6	5/16	4.8	5.6	14	14	15.3	17.7	32.5	39.9
SR - 6M - 6	6	3/8	4.8	6.9	14	14	15.3	17.7	33.3	40.7
SR - 6M - 8	6	1/2	4.8	9.4	14	14	15.3	17.7	38.9	46.3
SR - 8M - 6	8	3/8	6.4	6.9	15	16	16.2	18.6	34.5	42.0
SR - 8M - 8	8	1/2	6.4	9.4	15	16	16.2	18.6	40.1	47.6
SR - 10M - 6	10	3/8	7.9	6.9	18	19	17.2	19.5	36.6	44.2
SR - 10M - 8	10	1/2	7.9	9.4	18	19	17.2	19.5	42.2	49.8
SR - 12M - 8	12	1/2	9.5	9.4	22	22	22.8	22.0	42.2	52.3
SR - 12M - 12	12	3/4	9.5	14.8	22	22	22.8	22.0	43.7	53.8
SR - 18M - 12	18	3/4	15.1	14.8	27	30	24.4	22.0	46.0	56.1
SR - 18M - 16	18	1	15.1	20.4	27	30	24.4	22.0	52.3	62.4

SRB
Bulkhead Reducer

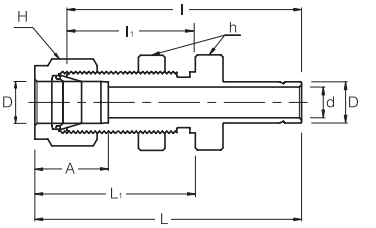

Connects Fractional Tubes To Fractional SUPERLOK® Port

Part No.	Tube O.D. D (inch)	d Min	Width Across Flat		A	I	I_1	L	L_1	Panel Hole Drill Size	Panel Max. Thickness
			h (inch)	H (inch)							
SRB - 2 - 2	1/8	2.1	1/2	7/16	12.70	42.92	24.63	49.53	31.24	8.33	12.70
SRB - 4 - 4	1/4	4.4	5/8	9/16	15.24	48.51	26.16	55.88	33.52	11.50	10.16
SRB - 6 - 6	3/8	6.9	3/4	11/16	16.76	53.84	29.46	61.21	36.83	14.68	11.17
SRB - 8 - 8	1/2	9.4	15/16	7/8	22.86	62.73	31.75	72.89	41.91	19.44	12.70
SRB - 10 - 10	5/8	12.0	1-1/16	1	24.38	65.02	32.51	75.18	42.67	22.62	12.70
SRB - 16 - 16	1	20.4	1-5/8	1-1/2	31.24	88.13	45.21	100.33	57.40	33.73	19.05

• All dimensions in millimeters unless specified as “inch”. Dimension are for reference only, subject to change

SMA
Male Adapter

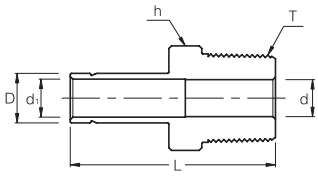

Connects Fractional SUPERLOK® Port To Female NPT Thread

Part No.	Tube O.D. D (inch)	T* (NPT)	d (Min)	d_1	Width Across Flat h (inch)	L
SMA - 2 - 2N	1/8	1/8	4.82	2.10	7/16	29.50
SMA - 2 - 4N	1/8	1/4	7.11	2.10	9/16	34.80
SMA - 3 - 2N	3/16	1/8	4.82	3.04	7/16	30.22
SMA - 3 - 4N	3/16	1/4	7.11	3.04	9/16	35.56
SMA - 4 - 2N	1/4	1/8	4.40	4.40	7/16	31.80
SMA - 4 - 4N	1/4	1/4	4.40	4.40	9/16	37.08
SMA - 4 - 6N	1/4	3/8	4.40	4.40	11/16	37.84
SMA - 4 - 8N	1/4	1/2	4.40	4.40	7/8	43.43
SMA - 5 - 2N	5/16	1/8	4.82	5.60	7/16	32.76
SMA - 5 - 4N	5/16	1/4	6.35	5.60	9/16	38.10
SMA - 6 - 2N	3/8	1/8	4.82	6.90	7/16	33.50
SMA - 6 - 4N	3/8	1/4	6.90	6.90	9/16	38.90
SMA - 6 - 6N	3/8	3/8	6.90	6.90	11/16	39.60
SMA - 6 - 8N	3/8	1/2	6.90	6.90	7/8	45.20
SMA - 8 - 4N	1/2	1/4	7.11	9.40	9/16	44.50
SMA - 8 - 6N	1/2	3/8	9.40	9.40	11/16	45.20
SMA - 8 - 8N	1/2	1/2	9.40	9.40	7/8	50.80
SMA - 10 - 6N	5/8	3/8	9.90	12.00	11/16	47.40
SMA - 10 - 8N	5/8	1/2	12.00	12.00	7/8	52.30
SMA - 10 - 12N	5/8	3/4	14.98	12.00	1-1/16	52.30
SMA - 12 - 8N	3/4	1/2	11.94	14.80	7/8	52.30
SMA - 12 - 12N	3/4	3/4	14.80	14.80	1-1/16	52.30
SMA - 12 - 16N	3/4	1	20.32	14.80	1-3/8	57.91
SMA - 14 - 12N	7/8	3/4	14.98	17.27	1-1/16	54.30
SMA - 16 - 12N	1	3/4	15.74	20.40	1-1/16	58.70
SMA - 16 - 16N	1	1	20.40	20.40	1-3/8	66.00

* ISO Tapered Threads are available upon request

Connects Metric SUPERLOK® Port To Female NPT Thread

Part No.	Tube O.D. D (inch)	T* (NPT)	d (Min)	d_1	Width Across Flat h (inch)	L
SMA - 6M - 2N	6	1/8	4.1	4.1	12	32.8
SMA - 6M - 4N	6	1/4	4.1	4.1	14	38.1
SMA - 8M - 4N	8	1/4	5.6	5.6	14	39.1
SMA - 10M - 4N	10	1/4	7.1	7.1	14	39.9
SMA - 10M - 6N	10	3/8	7.1	7.1	18	40.6
SMA - 10M - 8N	10	1/2	11.9	7.1	22	46.2
SMA - 12M - 4N	12	1/4	7.1	8.8	16	46.5
SMA - 12M - 8N	12	1/2	11.9	8.8	22	52.0
SMA - 18M - 12N	18	3/4	15.9	13.9	27	54.8

* ISO Tapered Threads are available upon request

• All dimensions in millimeters unless specified as “inch”. Dimension are for reference only, subject to change

SFA

Female Adapter

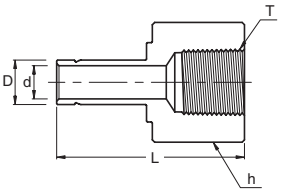

Connects Fractional SUPERLOK® Port To Male NPT Thread

Part No.	Tube O.D. D (inch)	T* (NPT)	d (Min)	Width Across Flat h (inch)	L
SFA - 2 - 2N	1/8	1/8	2.10	9/16	31.50
SFA - 2 - 4N	1/8	1/4	2.10	3/4	35.30
SFA - 3 - 2N	3/16	1/8	3.04	9/16	32.00
SFA - 3 - 4N	3/16	1/4	3.04	3/4	35.81
SFA - 4 - 2N	1/4	1/8	4.40	9/16	33.02
SFA - 4 - 4N	1/4	1/4	4.40	3/4	37.10
SFA - 4 - 6N	1/4	3/8	4.40	7/8	39.37
SFA - 4 - 8N	1/4	1/2	4.40	1-1/16	45.50
SFA - 5 - 2N	5/16	1/8	5.60	9/16	34.29
SFA - 5 - 4N	5/16	1/4	5.60	3/4	37.59
SFA - 6 - 2N	3/8	1/8	6.90	9/16	34.29
SFA - 6 - 4N	3/8	1/4	6.90	3/4	38.10
SFA - 6 - 6N	3/8	3/8	6.90	7/8	40.38
SFA - 6 - 8N	3/8	1/2	6.90	1-1/16	46.73
SFA - 8 - 4N	1/2	1/4	9.40	3/4	43.43
SFA - 8 - 6N	1/2	3/8	9.40	7/8	45.46
SFA - 8 - 8N	1/2	1/2	9.40	1-1/16	51.80
SFA - 10 - 6N	5/8	3/8	12.00	7/8	48.26
SFA - 10 - 8N	5/8	1/2	12.00	1-1/16	53.08
SFA - 12 - 8N	3/4	1/2	14.80	1-1/16	52.83
SFA - 12 - 12N	3/4	3/4	14.80	1-5/16	54.86
SFA - 12 - 16N	3/4	1	14.80	1-5/8	58.42
SFA - 14 - 12N	7/8	3/4	17.27	1-5/16	57.15
SFA - 16 - 12N	1	3/4	20.40	1-5/16	60.70
SFA - 16 - 16N	1	1	20.40	1-5/8	64.26

* ISO Tapered or ISO Parallel Threads are available upon request

Connects Metric SUPERLOK® Port To Male NPT Thread

Part No.	Tube O.D. D (inch)	T* (NPT)	d (Min)	Width Across Flat h (inch)	L
SFA - 3M - 2N	3	1/8	1.8	14	31.2
SFA - 6M - 2N	6	1/8	4.1	14	32.5
SFA - 6M - 4N	6	1/4	4.1	19	37.1
SFA - 8M - 4N	8	1/4	5.6	19	37.6
SFA - 10M - 4N	10	1/4	7.1	19	38.1
SFA - 10M - 6N	10	3/8	7.1	22	40.1
SFA - 10M - 8N	10	1/2	7.1	27	46.5
SFA - 12M - 4N	12	1/4	8.8	19	43.7
SFA - 12M - 6N	12	3/8	8.8	22	46.0
SFA - 12M - 8N	12	1/2	8.8	27	52.3
SFA - 18M - 12N	18	3/4	13.9	32	54.8

* ISO Tapered or ISO Parallel Threads are available upon request

• All dimensions in millimeters unless specified as “inch”. Dimension are for reference only, subject to change

SUPERLOK® Adapter Solve Alignment Problems

1. Required installation is to connect tubing in direction shown, to a female port.

3. To connect this situation, merely tighten pipe thread of male adapter into female port.

2. With pipe connection tight, the male elbow is pointing in the wrong direction for desired tubing run.

4. Connect union elbow to adapter by tightening SUPERLOK connection with wrench while holding elbow pointing in desired direction Then insert tubing into the other end of the Union Elbow and connect tubing

SPC
Port Connector

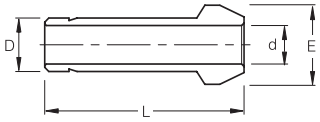

Connects Fractional SUPERLOK® Ports

Part No.	Tube O.D. D (inch)	d (Min)	E	L
SPC - 2	1/8	2.1	6.09	22.35
SPC - 4	1/4	4.4	9.39	25.30
SPC - 5	5/16	5.6	10.92	25.90
SPC - 6	3/8	6.9	12.70	26.70
SPC - 8	1/2	9.4	15.74	35.81
SPC - 12	3/4	14.8	22.09	38.10
SPC - 16	1	20.4	28.44	48.00

Connects Metric SUPERLOK® Ports

Part No.	Tube O.D. D (inch)	d (Min)	E	L
SPC - 3M	3	1.9	6.0	22.2
SPC - 6M	6	4.1	9.0	24.6
SPC - 8M	8	5.6	11.0	28.5
SPC - 10M	10	7.1	13.1	26.1
SPC - 12M	12	8.8	15.0	35.8
SPC - 16M	16	12.0	19.0	37.4

• All dimensions in millimeters unless specified as “inch”. Dimension are for reference only, subject to change

SRPC

Reducing Port Connector

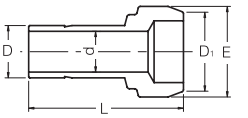

Connects Fractional SUPERLOK® Port To Male AN

Part No.	Tube O.D. D_1 (inch)	Reduced Tube O.D. D (inch)	d	E	l	l_1	L
SRPC - 2 - 1	1/8	1/16	0.76	6.09	8.63	2.03	17.27
SRPC - 4 - 1	1/4	1/16	0.76	9.39	8.63	3.55	18.03
SRPC - 4 - 2	1/4	1/8	2.10	9.39	13.46	3.30	22.60
SRPC - 6 - 2	3/8	1/8	2.10	12.70	13.46	3.81	23.11
SRPC - 6 - 4	3/8	1/4	4.40	12.70	15.74	3.30	24.89
SRPC - 8 - 4	1/2	1/4	4.40	15.74	15.74	3.81	29.21
SRPC - 8 - 6	1/2	3/8	6.90	15.74	17.52	3.30	30.48
SRPC - 12 - 8	3/4	1/2	9.40	22.09	24.38	3.81	37.84
SRPC - 16 - 8	1	1/2	9.40	28.44	24.38	4.82	42.67
SRPC - 16 - 12	1	3/4	14.80	28.44	25.90	4.06	43.43

Installation Instructions

Port Connector

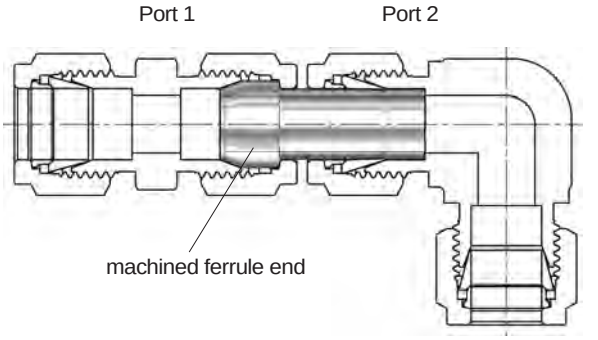

- Remove nut and ferrules from the first of two SUPERLOK ports to be connected.
- Slip nut (no ferrules) over machined ferrule end of port connector.
- Insert port connector into SUPERLOK port 1 and snug by hand.
  Tighten with wrench 1/4 turn only. For 1/8, 3/16 in., 2, 3, and 4mm tube fittings, tighten only 1/8 turn.
  Subsequent connections are made by tightening slightly with a wrench after snugging the nut by hand.
- Insert other end of port connector into SUPERLOK port 2 and tighten nut 1 1/4 turns from finger-tight.
  For 1/16, 1/8, 3/16 in., 2, 3, and 4mm tube fittings, only 3/4 turn from finger-tight is necessary.

• All dimensions in millimeters unless specified as “inch”. Dimension are for reference only, subject to change

SFTC

Lap Joint Flange Tubes Connector

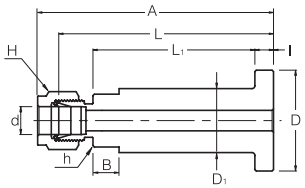

Connects Fractional Tubes

Part No.	Tube Size (inch)	Flange Seat	Dimensions									
			A	B	L_1	L	I	h (inch)	H (inch)	D	D_1	d (Min)
SFTC - 4 - SM	1/4	SM	80.8	8.9	56.5	74.9	6.5	11/16	9/16	34.5	21.1	4.8
SFTC - 4 - SR	1/4	SR	80.8	8.9	56.5	74.9	6.5	11/16	9/16	34.5	21.1	4.8
SFTC - 6 - SM	3/8	SM	82.3	8.9	56.5	74.9	6.5	11/16	11/16	34.5	21.1	7.1
SFTC - 6 - SR	3/8	SR	82.3	8.9	56.5	74.9	6.5	11/16	11/16	34.5	21.1	7.1
SFTC - 8 - SM	1/2	SM	85.1	8.9	56.5	74.9	6.5	3/4	7/8	34.5	21.1	10.4
SFTC - 8 - SR	1/2	SR	85.1	8.9	56.5	74.9	6.5	3/4	7/8	34.5	21.1	10.4

Lap joint flange tube connector provieds easy joint between process lines and instruments designed for use with 1/2in Lap joint flanges to ANSI B 16.5 or BS 1560

Flange Seal Finish

Two surface finishes, smooth or serrated, are available on the sealing surface of the stub end.

Smooth
Identifier : SM
Ra 3.2 ~ 6.3 micrometer

Serrated
Identifier : SR
Ra 6.3 ~ 12.5 micrometer

*Note : GROOVE identifies serrated surface finish

SAF

An Flare

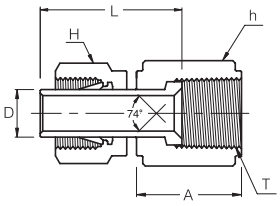

Connects Fractional SUPERLOK® Port To Male AN

Part No.	Tube O.D. D (inch)	AN Tube Flare Size (inch)	Straight Thread T (U)	Width Across Flat		A	L
				h (inch)	H (inch)		
SAF - 2 - 2U	1/8	1/8	5/16-24	3/8	7/16	13.71	18.54
SAF - 2 - 4U	1/8	1/4	7/16-20	9/16	7/16	15.74	19.05
SAF - 4 - 4U	1/4	1/4	7/16-20	9/16	9/16	15.74	23.20
SAF - 6 - 6U	3/8	3/8	9/16-18	11/16	11/16	18.28	27.30
SAF - 8 - 8U	1/2	1/2	3/4-16	7/8	7/8	21.59	34.50

• All dimensions in millimeters unless specified as “inch”. Dimension are for reference only, subject to change

SAU
An Union

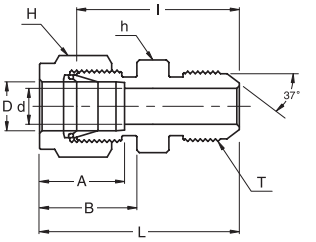

Connects Fractional Tubes To An Flared Tubes

Part No.	Tube O.D. D (inch)	AN Tube Flare Size (inch)	Straight Thread T (U)	d Min	Width Across Flat		A	B	I	L
					h (inch)	H (inch)				
SAU - 2 - 2U	1/8	1/8	5/16-24	1.52	7/16	7/16	12.70	15.24	25.65	32.25
SAU - 2 - 4U	1/8	1/4	7/16-20	2.28	1/2	7/16	12.70	15.24	28.44	35.05
SAU - 4 - 4U	1/4	1/4	7/16-20	4.31	1/2	9/16	15.24	17.78	30.22	37.59
SAU - 5 - 5U	5/16	5/16	1/2-20	5.84	9/16	5/8	16.25	18.54	30.98	38.35
SAU - 6 - 4U	3/8	1/4	7/16-20	4.31	5/8	11/16	16.76	19.30	32.25	39.62
SAU - 6 - 6U	3/8	3/8	9/16-18	7.11	5/8	11/16	16.76	19.30	32.25	39.62
SAU - 8 - 8U	1/2	1/2	3/4-16	9.90	13/16	7/8	22.86	21.84	35.81	45.97
SAU - 12 - 12U	3/4	3/4	1-1/16-12	15.49	1-1/8	1-1/8	24.38	21.84	43.18	53.34
SAU - 16 - 16U	1	1	1-5/16-12	21.33	1-3/8	1-1/2	31.24	26.41	49.27	61.46

SAA
An Adapter

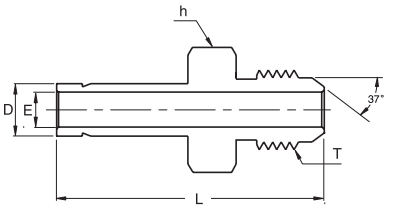

Connects Fractional SUPERLOK® Port To AN Flared Tubes

Part No.	Tube O.D. D (inch)	AN Tube Flare Size (inch)	Straight Thread T (U)	Width Across Flat h (inch)	E	L
SAA - 4 - 4U	1/4	1/4	7/16-20	1/2	4.40	37.08
SAA - 6 - 4U	3/8	1/4	7/16-20	1/2	6.90	38.86
SAA - 6 - 6U	3/8	3/8	9/16-18	5/8	6.90	39.62
SAA - 8 - 8U	1/2	1/2	3/4-16	13/16	9.40	48.51
SAA -12 - 12U	3/4	3/4	1-1/16-12	1-1/8	14.80	56.13
SAA -16 - 16U	1	1	1-5/16-12	1-3/8	20.40	65.53

• All dimensions in millimeters unless specified as “inch”. Dimension are for reference only, subject to change

SOSC

Straight Thread Connector

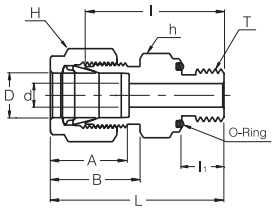

Connects Fractional Tube To Female Straight Thread

Part No.	Tube O.D. D (inch)	Straight Thread T (U)	d Min	Width Across Flat		A	B	l	l_1	L	O-Ring Uniform Size Number
				h (inch)	H (inch)						
SOSC - 2 - 2U	1/8	5/16-24	2.28	9/16	7/16	12.70	15.24	26.16	8.63	32.76	-011
SOSC - 3 - 3U	3/16	3/8-24	3.05	5/8	1/2	13.71	16.00	27.68	9.65	34.29	-012
SOSC - 4 - 4U	1/4	7/16-20	4.82	3/4	9/16	15.24	17.78	30.98	10.41	38.35	-111
SOSC - 5 - 5U	5/16	1/2-20	6.35	7/8	5/8	16.25	18.54	33.27	11.17	40.64	-112
SOSC - 6 - 6U	3/8	9/16-18	7.11	15/16	11/16	16.76	19.30	35.05	11.93	42.41	-114
SOSC - 8 - 8U	1/2	3/4-16	10.41	1-1/8	7/8	22.86	21.84	35.81	11.93	45.97	-116
SOSC -12 - 12U	3/4	1-1/16-12	15.75	1-1/2	1-1/8	24.38	21.84	42.16	14.22	52.32	-215
SOSC -16 - 16U	1	1-5/16-12	22.35	1-3/4	1-1/2	31.24	26.41	45.97	14.22	58.16	-219

SOPC

O-Seal Pipe Thread Connector

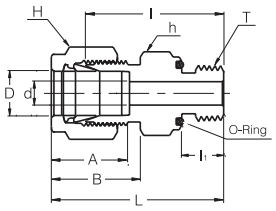

Connects Fractional Tube To Female NPT Thread

Part No.	Tube O.D. D (inch)	T* (NPT)	d Min	Width Across Flat		A	B	l	l_1	L	O-Ring Uniform Size Number
				h (inch)	H (inch)						
SOPC - 2 - 2N	1/8	1/8	2.28	3/4	7/16	12.70	15.24	26.16	7.11	32.76	-111
SOPC - 4 - 2N	1/4	1/8	4.82	3/4	9/16	15.24	17.78	27.68	7.11	35.05	-111
SOPC - 4 - 4N	1/4	1/4	4.82	15/16	9/16	15.24	17.78	30.98	9.65	38.35	-113
SOPC - 6 - 4N	3/8	1/4	7.11	15/16	11/16	16.76	19.30	32.51	9.65	39.87	-113
SOPC - 6 - 6N	3/8	3/8	7.11	1-1/8	11/16	16.76	19.30	34.03	10.41	41.40	-116
SOPC - 6 - 8N	3/8	1/2	7.11	1-5/16	11/16	16.76	19.30	39.62	13.46	46.99	-212
SOPC - 8 - 8N	1/2	1/2	10.41	1-5/16	7/8	22.86	21.84	39.62	13.46	49.78	-212

• All dimensions in millimeters unless specified as “inch”. Dimension are for reference only, subject to change

SSMC

SAE/MS Male Connector

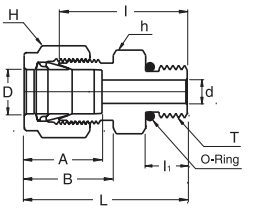

Connects Fractional Tubes To SAE/MS Straight Thread Boss

Part No.	Tube O.D. D (inch)	Straight Thread T (U)	d Min	Width Across Flat		A	B	I	l_1	L	O-Ring Uniform Size Number
				h (inch)	H (inch)						
SSMC - 2 - 2U	1/8	5/16-24	2.28	7/16	7/16	12.70	15.24	23.36	7.62	29.97	3-902
SSMC - 4 - 4U	1/4	7/16-20	4.82	9/16	9/16	15.24	17.78	26.67	9.14	34.03	3-904
SSMC - 4 - 6U	1/4	9/16-18	4.82	11/16	9/16	15.24	17.78	28.19	9.90	35.56	3-906
SSMC - 4 - 8U	1/4	3/4-16	4.82	7/8	9/16	15.24	17.78	30.22	11.17	37.59	3-908
SSMC - 4 - 10U	1/4	7/8-14	4.82	1	9/16	15.24	17.78	33.27	12.70	40.64	3-910
SSMC - 5 - 5U	5/16	1/2-20	6.35	5/8	5/8	16.25	18.54	27.43	9.14	34.79	3-905
SSMC - 6 - 4U	3/8	7/16-20	5.08	5/8	11/16	16.76	19.30	28.19	9.14	35.56	3-904
SSMC - 6 - 6U	3/8	9/16-18	7.11	11/16	11/16	16.76	19.30	29.71	9.90	37.08	3-906
SSMC - 6 - 8U	3/8	3/4-16	7.11	7/8	11/16	16.76	19.30	31.75	11.17	39.11	3-908
SSMC - 6 - 10U	3/8	7/8-14	7.11	1	11/16	16.76	19.30	34.79	12.70	42.16	3-910
SSMC - 8 - 6U	1/2	9/16-18	7.11	13/16	7/8	22.86	21.84	28.95	9.90	39.11	3-906
SSMC - 8 - 8U	1/2	3/4-16	10.41	7/8	7/8	22.86	21.84	31.75	11.17	41.91	3-908
SSMC - 8 - 10U	1/2	7/8-14	10.41	1	7/8	22.86	21.84	34.79	12.70	44.95	3-910
SSMC - 8 - 12U	1/2	1-1/16-12	10.41	1-1/4	7/8	22.86	21.84	38.86	14.98	49.02	3-912
SSMC - 10 - 8U	5/8	3/4-16	10.66	15/16	1	24.38	21.84	31.75	11.17	41.91	3-908
SSMC - 10 - 10U	5/8	7/8-14	12.70	1	1	24.38	21.84	35.05	12.70	45.21	3-910
SSMC - 12 - 8U	3/4	3/4-16	10.66	1-1/16	1-1/8	24.38	21.84	35.81	11.17	45.97	3-908
SSMC - 12 - 12U	3/4	1-1/16-12	15.74	1-1/4	1-1/8	24.38	21.84	38.86	14.98	49.02	3-912
SSMC - 14 - 14U	7/8	1-3/16-12	18.28	1-3/8	1-1/4	25.90	21.84	38.86	14.98	49.02	3-914
SSMC - 16 - 12U	1	1-1/16-12	16.76	1-3/8	1-1/2	31.24	26.41	41.14	14.98	53.34	3-912
SSMC - 16 - 16U	1	1-5/16-12	22.35	1-1/2	1-1/2	31.24	26.41	42.16	14.98	54.35	3-916

• All dimensions in millimeters unless specified as “inch”. Dimension are for reference only, subject to change

Mounting Dimensions for O-Seal Connectors

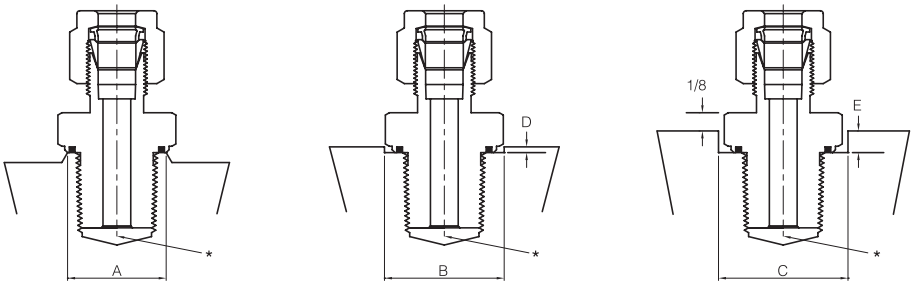

Figure 1 Figure 2 Figure 3

*ALLOW CLEARANCE FOR FULL THREAD

■ Installation Instruction

In order to prevent the leakage with SUPERLOK O-Seal Fittings, the surface perpendicular to the axis of the thread should be flat. When installing an O-Seal fitting, turn it until finger-tight.(The squeeze on O-Ring can be felt during the last 1/4 turn). After finger-tight installation, snug lightly with a wrench.

When connecting the tubing to the SUPERLOK connector, always use a back-up wrench on the O-Seal fitting hex so it does not turn while the nut is being tightened. Also use a back-up wrench when disconnectiong a tubing connection.

For a raised surface, such as Figure 1, it is recommended that the flat surface have a diameter at least as large as dimension “A” for the various size O-Seal fittings. This diameter is sufficient to allow metal-to-metal contact outside of the O-Ring sealing diameter and to prevent O-Ring extrusion at high pressure.

Figure 2 is an O-Seal fitting using with a counter bored or recessed hole. In this case, the diameter “B” is sufficient to allow the round shoulder of the O-seal to clear for proper installation. “D” gives the maximum depth that can be used with this diameter.

Figure 3 shows the usage at deeper grooved or concaved area and “E” is the maximum depth that will allow a thin wrench(1/8″)to hold the O-Seal fitting while the SUPERLOK connection is made to the tubing. The diameter “C” is sufficient to allow the hex of the fitting to turn in the recessed hole.

Basic Ordering Number	Straight Thread	Pipe Thread	A Min. Dia.	B Min. Dia.	C Min. Dia.	D Min. Dia.	E Min. Dia.
SOSC - 1 - 2U	5/16-24	-	12.7	15.0	16.8	2.3	4.1
SOSC - 2 - 2U	5/16-24	-	12.7	15.0	16.8	2.3	5.6
SOPC - 2 - 2N	-	1/8 NPT	17.5	19.8	22.4	4.1	7.1
SOSC - 3 - 3U	3/8-24	-	14.2	16.8	19.1	2.3	5.6
SOSC - 4 - 4U	7/16-20	-	17.5	19.8	22.4	4.1	7.1
SOPC - 4 - 2N	-	1/8 NPT	17.5	19.8	22.4	4.1	7.1
SOPC - 4 - 4N	-	1/4 NPT	22.1	24.6	27.7	4.1	7.9
SOSC - 5 - 5U	1/2-20	-	19.1	23.1	26.2	4.1	7.9
SOSC - 6 - 6U	9/16-18	-	20.6	24.6	27.7	4.1	7.9
SOPC - 6 - 4N	-	1/4 NPT	22.1	24.6	27.7	4.1	7.9
SOPC - 6 - 6N	-	3/8 NPT	25.4	29.5	33.3	4.1	8.6
SOPC - 6 - 8N	-	1/2 NPT	31.0	34.0	38.9	5.6	11.2
SOSC - 8 - 8U	3/4-16	-	25.4	29.5	33.3	4.1	8.6
SOPC - 8 - 8N	-	1/2 NPT	31.0	34.0	38.9	5.6	11.2
SOSC - 12 - 12U	1-1/16-12	-	35.8	38.9	44.5	5.6	12.7
SOSC - 16 - 16U	1-5/16-12	-	42.9	45.2	51.6	5.6	14.2

Dimensions are for reference only and are subject to change.

• All dimensions in millimeters unless specified as “inch”. Dimension are for reference only, subject to change

SAE/MS Straight Thread Positionable Elbows and Tees

Installation instructions

1. Lubricate O-Ring with the lubricant which is applicable for the system fluid, environment and O-Ring material. (Standard O-Ring materials is viton. Other O-Ring materials are also available).
2. Turn the fittings into the straight thread boss until the metal back- up washer contacts the face of the boss. At this moment, O-Ring gets into inclined groove.
3. Until SUPERLOK's end is oriented in the proper direction, position the fittings by turning to counter clockwise. (no more than 1 turning)
4. Until the washer contacts to the face of the bosses, tighten the fittings with wrench and back-up wrench .

※ Note: SAE/MS's POSITIONABLE TEE and ELBOWS shall be compatible with SAE J1926, MS16142, or O-Ring female straight thread for JIS boss.

O-Ring for SAE/MS Fittings Bosses

Thread size	Inside Dimension (mm)	Cross Section (mm)	O-Ring Size No.	Thread size	Inside Dimension (mm)	Cross Section (mm)	O-Ring Size No.
5/16-24	6.07	1.63	3-902	3/4-16	16.36	2.21	3-908
3/8-24	7.65	1.63	3-903	7/8-14	19.18	2.46	3-910
7/16-20	8.92	1.83	3-904	1-1/16-12	23.47	2.95	3-912
1/2-20	10.52	1.83	3-905	1-3/16-12	26.59	2.95	3-914
9/16-18	11.89	1.98	3-906	1-5/16-12	29.74	2.95	3-916

• All dimensions in millimeters unless specified as "inch". Dimension are for reference only, subject to change

SAE/MS Internal Straight Thread Boss

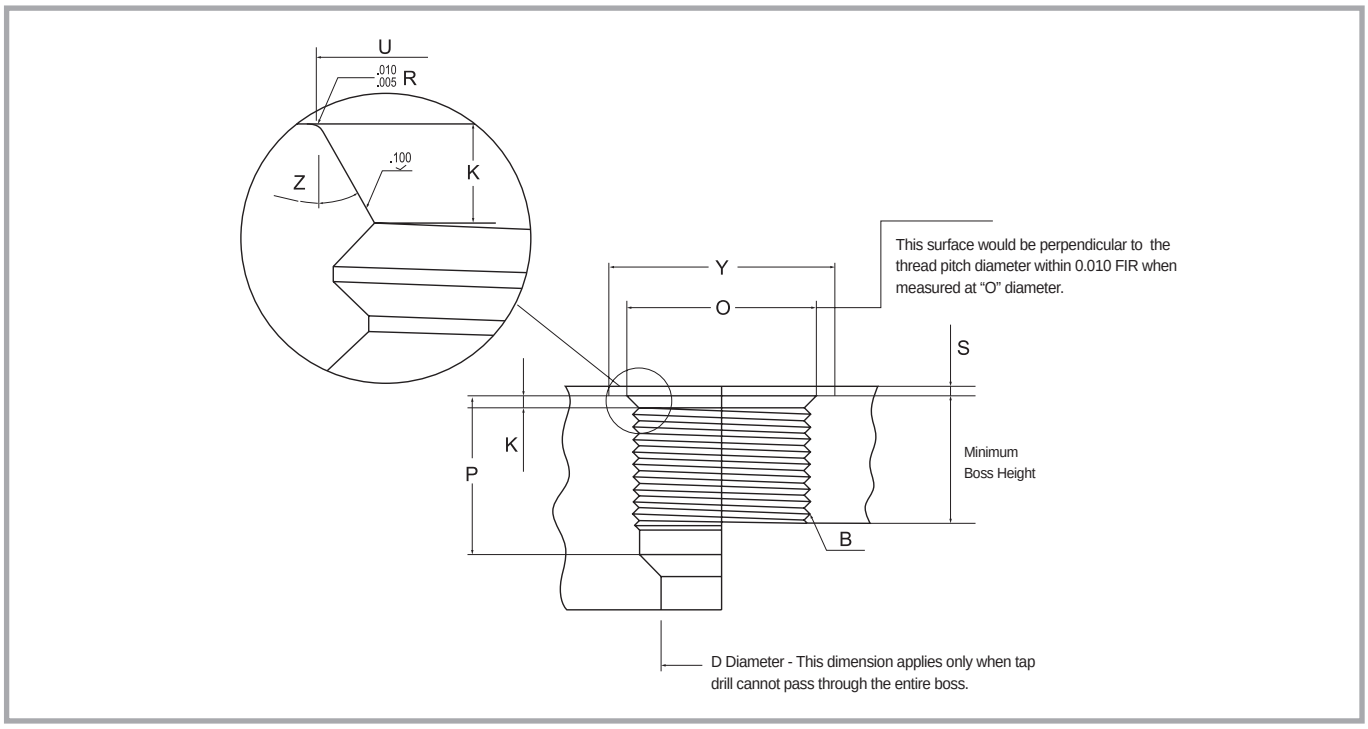

- O : This surface would be perpendicular to the thread pitch diameter within 0.010 FIR when measured at "O" diameter.
- D : This dimension applies only when tap drill cannot pass through the entire boss.

Data for SAE/MS Straight Thread Boss

Nom. Tube.O.D	Thread Size	B / Straight Thread				D Dia	Full Thread Depth	K	O Dia	P④	S②③	U② Dia	Y① Dia	Z
		Pitch Dia		Minor Dia										
		Min	Max	Min	Max	Min	Min	+0.015 -0.000	Min	Min	Min	Max		±1 Deg
1/8	5/16 - 24	0.2854	0.2902	0.267	0.277	0.062	0.390	0.074	0.438	0.468	0.062	0.358	0.672	12
3/16	3/8 - 24	0.3479	0.3528	0.330	0.340	0.125	0.390	0.074	0.500	0.468	0.062	0.421	0.750	12
1/4	7/16 -20	0.4050	0.4104	0.383	0.395	0.172	0.454	0.093	0.563	0.547	0.062	0.487	0.828	12
5/16	1/2 -20	0.4675	0.4731	0.446	0.457	0.234	0.454	0.093	0.625	0.547	0.062	0.550	0.906	12
3/8	9/16 -18	0.5624	0.5323	0.502	0.515	0.297	0.500	0.097	0.688	0.609	0.062	0.616	0.969	12
1/2	3/4 -16	0.7094	0.7159	0.682	0.696	0.391	0.562	0.100	0.875	0.688	0.094	0.811	1.188	15
5/8	7/8 -14	0.8286	0.8356	0.798	0.614	0.484	0.656	0.100	1.000	0.781	0.094	0.942	1.344	15
3/4	1 1/16 -12	1.0084	1.0158	0.972	0.990	0.609	0.750	1.130	1.250	0.906	0.094	1.148	1.625	15
7/8	1 3/16 -12	1.1334	1.1409	1.097	1.115	0.719	0.750	1.130	1.375	0.906	0.094	1.273	1.765	15
1	1 5/16 -12	1.2584	1.2659	1.222	1.240	0.844	0.750	0.130	1.500	0.906	0.125	1.398	1.910	15
1 1/4	1 5/8 -12	1.5709	1.5785	1.535	1.553	1.078	0.750	0.132	1.875	0.906	0.125	1.713	2.270	15
1 1/2	1 7/8 -12	1.8209	1.8287	1.785	1.803	1.312	0.750	0.132	2.125	0.906	0.125	1.962	2.560	15
2	2 1/2 -12	2.4459	2.4540	2.410	2.428	1.781	0.750	0.132	2.750	0.906	0.125	2.587	3.480	15

① Diameter U shall be concentric with thread pitch diameter within 0.005 full indicator reading (FIR) and shall be free from longitudinal and spiral tool marks. Annular tool marks shall be less than 100micro inches.

② This is the maximum recommended spotface depth to permit sufficient wrench grip for proper tightening of the fitting or locknut

③ If the surface of boss surface is machined, dimensions Y and S does not need to be applied.

④ Bottoming tap shall be used to satisfy the tap drill depth. Where standard taps are used, the drill depths must be increased accordingly

• All dimensions in millimeters unless specified as "inch". Dimension are for reference only, subject to change

SPWC

Male Pipe Weld Connector

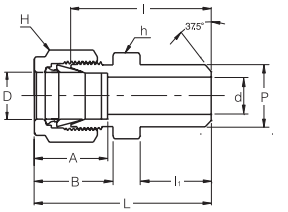

Connects Fractional Tubes To Pipe

Part No.	Tube O.D. D (inch)	Male Pipe Size p		d Min	Width Across Flat		A	B	I	I_1	L
		Nom.	O.D.		h (inch)	H (inch)					
SPWC - 2 - 2P	1/8	1/8	10.30	2.28	7/16	7/16	12.70	15.24	23.87	9.65	30.48
SPWC - 3 - 2P	3/16	1/8	10.30	3.04	7/16	1/2	13.71	16.00	24.63	9.65	31.24
SPWC - 4 - 2P	1/4	1/8	10.30	4.82	1/2	9/16	15.24	17.78	25.40	9.65	32.76
SPWC - 4 - 4P	1/4	1/4	13.70	4.82	9/16	9/16	15.24	17.78	30.48	14.22	37.84
SPWC - 5 - 2P	5/16	1/8	10.30	5.08	9/16	5/8	16.25	18.54	26.67	9.65	34.03
SPWC - 5 - 4P	5/16	1/4	13.70	6.35	9/16	5/8	16.25	18.54	31.24	14.22	38.60
SPWC - 6 - 4P	3/8	1/4	13.70	7.11	5/8	11/16	16.76	19.30	32.51	14.22	39.87
SPWC - 6 - 6P	3/8	3/8	17.10	7.11	11/16	11/16	16.76	19.30	32.51	14.22	39.87
SPWC - 6 - 8P	3/8	1/2	21.30	7.11	7/8	11/16	16.76	19.30	38.86	19.05	46.22
SPWC - 8 - 6P	1/2	3/8	17.10	10.41	13/16	7/8	22.86	21.84	33.27	14.22	43.43
SPWC - 8 - 8P	1/2	1/2	21.30	10.41	7/8	7/8	22.86	21.84	38.86	19.05	49.02
SPWC - 8 - 12P	1/2	3/4	26.67	10.41	1-1/16	7/8	22.86	21.84	40.38	19.05	50.54
SPWC - 10 - 8P	5/8	1/2	21.30	12.70	15/16	1	24.38	21.84	38.86	19.05	49.02
SPWC - 12 - 12P	3/4	3/4	26.67	15.74	1-1/16	1-1/8	24.38	21.84	40.38	19.05	50.54
SPWC - 16 - 16P	1	1	33.40	22.35	1-3/8	1-1/2	31.24	26.41	50.03	23.87	62.23

Connects Metric Tubes To Pipe

Part No.	Tube O.D. D	Male Pipe Size p		d Min	Width Across Flat		A	B	I	I_1	L
		Nom.	O.D.		h	H					
SPWC - 3M - 2P	3	1/8	10.3	2.4	12	12	12.9	15.3	23.9	9.7	30.5
SPWC - 4M - 2P	4	1/8	10.3	2.4	12	12	13.7	16.1	24.6	9.7	31.2
SPWC - 6M - 2P	6	1/8	10.3	4.8	14	14	15.3	17.7	25.4	9.7	32.8
SPWC - 6M - 4P	6	1/4	13.7	4.8	14	14	15.3	17.7	30.5	14.2	37.9
SPWC - 8M - 2P	8	1/8	10.3	5.1	15	16	16.2	18.6	26.7	9.7	34.2
SPWC - 8M - 4P	8	1/4	13.7	6.4	15	16	16.2	18.6	31.2	14.2	38.7
SPWC - 8M - 8P	8	1/2	21.3	6.4	22	16	16.2	18.6	38.1	19.0	45.6
SPWC - 10M - 4P	10	1/4	13.7	7.1	18	19	17.2	19.5	33.3	14.2	40.9
SPWC - 10M - 6P	10	3/8	17.1	7.9	18	19	17.2	19.5	33.3	14.2	40.9
SPWC - 10M - 8P	10	1/2	21.3	7.9	22	19	17.2	19.5	38.9	19.0	46.5
SPWC - 12M - 4P	12	1/4	13.7	7.1	22	22	22.8	22.0	33.3	14.2	43.4
SPWC - 12M - 6P	12	3/8	17.1	9.5	22	22	22.8	22.0	33.3	14.2	43.4
SPWC - 12M - 8P	12	1/2	21.3	9.5	22	22	22.8	22.0	38.9	19.0	49.0
SPWC - 15M - 8P	15	1/2	21.3	11.9	24	25	24.4	22.0	38.9	19.0	49.0
SPWC - 16M - 8P	16	1/2	21.3	12.7	24	25	24.4	22.0	38.9	19.0	49.0
SPWC - 18M - 8P	18	1/2	21.3	13.5	27	30	24.4	22.0	40.4	19.0	50.5

Note : SUPERLOK® weld ends are constructed per schedule 80 wall thickness or greater. Weld End : ANSI B31.1 and B31.3

Weld end SUPERLOK® Usage Informations :

- Do weld after removing nut and ferrules from body to protect them from weld heat.
- Do protect thread end or pot and seat area of SUPERLOK® body with another nut and plug.(for easy disassembly just finger tighten it)
- Correct weld procedure is required during welding and after weld complition. sutable heat treatlment must be carried out in accordance with industry or your own standard.

• All dimensions in millimeters unless specified as “inch”. Dimension are for reference only, subject to change

SMPWE

Male Pipe Weld Elbow

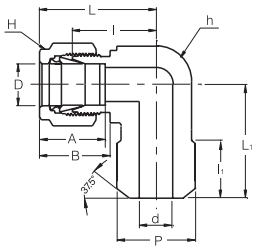

Connects Fractional Tubes To Pipe

Part No.	Tube O.D. D (inch)	Pipe Size (P)		d Min	Width Across Flat		A	B	l	l1	L	L1
		Nom.	O.D.		h (inch)	H (inch)						
SMPWE - 4 - 4P	1/4	1/4	13.70	4.82	1/2	9/16	15.24	17.78	19.55	14.22	26.90	23.37
SMPWE - 6 - 4P	3/8	1/4	13.70	7.11	5/8	11/16	16.76	19.30	23.11	14.22	30.48	25.40
SMPWE - 8 - 8P	1/2	1/2	21.30	10.41	13/16	7/8	22.86	21.84	25.90	19.05	36.06	33.02

SSWC

Tube Socket Weld Connector

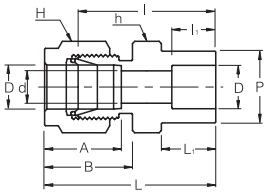

Connects Fractional Tubes

Part No.	Tube O.D. D (inch)	d Min	P	Width Across Flat		A	B	l	l1	L	L1
				h (inch)	H (inch)						
SSWC - 2	1/8	2.28	7.87	7/16	7/16	12.70	15.24	22.35	6.35	28.95	8.63
SSWC - 4	1/4	4.82	11.17	1/2	9/16	15.24	17.78	26.16	7.87	33.52	10.41
SSWC - 6	3/8	7.11	15.74	5/8	11/16	16.76	19.30	30.22	9.65	37.59	11.93
SSWC - 8	1/2	10.41	19.05	13/16	7/8	22.86	21.84	30.98	12.70	41.14	11.93
SSWC - 12	3/4	15.74	26.67	1-1/16	1-1/8	24.38	21.84	33.27	14.22	43.43	11.93
SSWC - 16	1	22.35	33.27	1-3/8	1-1/2	31.24	26.41	40.38	19.05	52.57	14.22

SSWE

Tube Socket Weld Elbow

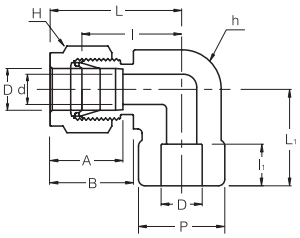

Connects Fractional Tubes

Part No.	Tube O.D. D (inch)	d Min	P	Width Across Flat		A	B	l	l1	L	L1
				h (inch)	H (inch)						
SSWE - 4	1/4	4.82	12.70	1/2	9/16	15.24	17.78	19.55	7.87	26.92	19.55
SSWE - 6	3/8	7.11	15.75	5/8	11/16	16.76	19.30	23.11	9.65	30.48	23.11
SSWE - 8	1/2	10.41	20.57	13/16	7/8	22.86	21.84	25.90	12.70	36.06	25.90
SSWE - 12	3/4	15.74	26.92	1-1/16	1-1/8	24.38	21.84	29.71	14.22	39.87	29.71
SSWE - 16	1	22.35	35.05	1-3/8	1-1/2	31.24	26.41	36.83	19.05	49.02	36.83

• All dimensions in millimeters unless specified as “inch”. Dimension are for reference only, subject to change

SP
Plug

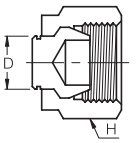

Plug provides plugging fitting port

Installation instruction
1. With wrench, 1/4 turn from finger-tight position. (1/8 turn for 1/8″, 3/16″,2, 3, 4 size plug)
2. Remove nut and ferrules from body

Fractional

Part No.	Tube O.D. D (inch)	Width Across Flat H (inch)	Part No.	Tube O.D. D (inch)	Width Across Flat H (inch)
SP - 2	1/8	7/16	SP - 8	1/2	7/8
SP - 3	3/16	1/2	SP - 10	5/8	1
SP - 4	1/4	9/16	SP - 12	3/4	1-1/8
SP - 5	5/16	5/8	SP - 14	7/8	1-1/4
SP - 6	3/8	11/16	SP - 16	1	1-1/2

Plugs Unused port of Metric SUPERLOK® fittings

Metric

Part No.	Tube O.D. D (inch)	Width Across Flat H	Part No.	Tube O.D. D (inch)	Width Across Flat H
SP - 2M	2	12	SP - 15M	15	25
SP - 3M	3	12	SP - 16M	16	25
SP - 4M	4	12	SP - 18M	18	30
SP - 6M	6	14	SP - 20M	20	32
SP - 8M	8	16	SP - 22M	22	32
SP - 10M	10	19	SP - 25M	25	38
SP - 12M	12	22			

Plugs Unused port of Fractional SUPERLOK® fittings

SC
Cap

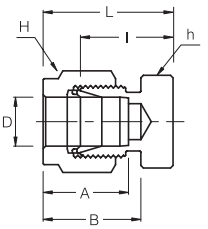

Installation instruction
1. With wrench, 1-1/4 turn from finger-tight position. (3/4 turn for 1/8″, 3/16″, 3mm, 4mm)
2. Insert tube end into cap

Connects Caps End of Fractional Tubes

Part No.	Tube O.D. D (inch)	Width Across Flat		A	B	I	L
		h (inch)	H (inch)				
SC - 1	1/16	5/16	5/16	8.63	10.92	11.20	14.98
SC - 2	1/8	7/16	7/16	12.70	15.24	13.46	20.06
SC - 3	3/16	7/16	1/2	13.71	16.00	14.73	21.33
SC - 4	1/4	1/2	9/16	15.24	17.78	16.00	23.36
SC - 5	5/16	9/16	5/8	16.25	18.54	17.01	24.38
SC - 6	3/8	5/8	11/16	16.76	19.30	18.28	25.65
SC - 8	1/2	13/16	7/8	22.86	21.84	19.05	29.21
SC - 10	5/8	15/16	1	24.38	21.84	19.81	29.97
SC - 12	3/4	1-1/16	1-1/8	24.38	21.84	23.33	33.49
SC - 14	7/8	1-3/16	1-1/4	25.90	21.84	23.87	34.03
SC - 16	1	1-3/8	1/1/2	31.24	26.41	26.16	38.35

Connects Metric Tubes

Part No.	Tube O.D. D	Width Across Flat		A	B	I	L	Part No.	Tube O.D. D	Width Across Flat		A	B	I	L
		h	H							h	H				
SC - 2M	2	12	12	12.9	15.3	13.5	20.1	SC - 15M	15	24	25	24.4	22.0	19.8	29.9
SC - 3M	3	12	12	12.9	15.3	13.5	20.1	SC - 16M	16	24	25	24.4	22.0	19.8	29.9
SC - 4M	4	12	12	13.7	16.1	14.7	21.3	SC - 18M	18	27	30	24.4	22.0	21.3	31.4
SC - 6M	6	14	14	15.3	17.7	15.7	23.1	SC - 20M	20	30	32	26.0	22.0	23.9	34.0
SC - 8M	8	15	16	16.2	18.6	17.0	24.5	SC - 22M	22	30	32	26.0	22.0	23.9	34.0
SC - 10M	10	18	19	17.2	19.5	19.0	26.6	SC - 25M	25	35	38	31.3	26.5	26.2	38.5
SC - 12M	12	22	22	22.8	22.0	19.0	29.1								

• All dimensions in millimeters unless specified as “inch”. Dimension are for reference only, subject to change

SN
Nut

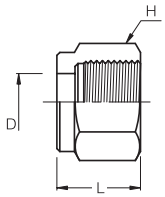

Fractional

Part No.	Tube O.D. D (inch)	Width Across Flat H (inch)	L	Part No.	Tube O.D. D (inch)	Width Across Flat H (inch)	L
SN - 1	1/16	5/16	7.90	SN - 8	1/2	7/8	17.52
SN - 2	1/8	7/16	11.93	SN - 10	5/8	1	17.52
SN - 3	3/16	1/2	11.93	SN - 12	3/4	1-1/8	17.52
SN - 4	1/4	9/16	12.70	SN - 14	7/8	1-1/4	17.52
SN - 5	5/16	5/8	13.46	SN - 16	1	1-1/2	20.6
SN - 6	3/8	11/16	14.22				

Metric

Part No.	Tube O.D. D	Width Across Flat H	L	Part No.	Tube O.D. D	Width Across Flat H	L
SN - 2M	2	12	11.9	SN - 14M	14	25	17.4
SN - 3M	3	12	11.9	SN - 15M	15	25	17.4
SN - 4M	4	12	11.9	SN - 16M	16	25	17.4
SN - 6M	6	14	12.7	SN - 18M	18	30	17.4
SN - 8M	8	16	13.5	SN - 20M	20	32	17.4
SN - 10M	10	19	15.1	SN - 22M	22	32	17.4
SN - 12M	12	22	17.4	SN - 25M	25	38	20.6

SFF
Front Ferrule

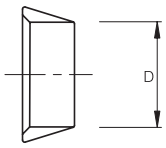

Fractional

Part No.	Tube O.D. D (inch)	Part No.	Tube O.D. D (inch)
SFF - 1	1/16	SFF - 8	1/2
SFF - 2	1/8	SFF - 10	5/8
SFF - 3	3/16	SFF - 12	3/4
SFF - 4	1/4	SFF - 14	7/8
SFF - 5	5/16	SFF - 16	1
SFF - 6	3/8		

Metric

Part No.	Tube O.D. D	Part No.	Tube O.D. D
SFF - 2M	2	SFF - 14M	14
SFF - 3M	3	SFF - 15M	15
SFF - 4M	4	SFF - 16M	16
SFF - 6M	6	SFF - 18M	18
SFF - 8M	8	SFF - 20M	20
SFF - 10M	10	SFF - 22M	22
SFF - 12M	12	SFF - 25M	25

• All dimensions in millimeters unless specified as “inch”. Dimension are for reference only, subject to change

SBF
Back Ferrule

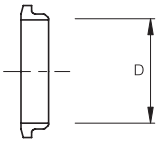

Fractional

Part No.	Tube O.D. D (inch)	Part No.	Tube O.D. D (inch)	Part No.	Tube O.D. D (inch)
SBF - 1	1/16	SBF - 5	5/16	SBF - 12	3/4
SBF - 2	1/8	SBF - 6	3/8	SBF - 14	7/8
SBF - 3	3/16	SBF - 8	1/2	SBF - 16	1
SBF - 4	1/4	SBF - 10	5/8		

Metric

Part No.	Tube O.D. D (inch)	Part No.	Tube O.D. D (inch)	Part No.	Tube O.D. D (inch)
SBF - 2M	2	SBF - 10M	10	SBF - 18M	18
SBF - 3M	3	SBF - 12M	12	SBF - 20M	20
SBF - 4M	4	SBF - 14M	14	SBF - 22M	22
SBF - 6M	6	SBF - 15M	15	SBF - 25M	25
SBF - 8M	8	SBF - 16M	16		

SFS
Ferrule Set

Fractional

Part No.	Tube O.D. D (inch)	Part No.	Tube O.D. D (inch)	Part No.	Tube O.D. D (inch)
SFS - 1	1/16	SFS - 5	5/16	SFS - 12	3/4
SFS - 2	1/8	SFS - 6	3/8	SFS - 14	7/8
SFS - 3	3/16	SFS - 8	1/2	SFS - 16	1
SFS - 4	1/4	SFS - 10	5/8		

Metric

Part No.	Tube O.D. D (inch)	Part No.	Tube O.D. D (inch)	Part No.	Tube O.D. D (inch)
SFS - 2M	2	SFS - 10M	10	SFS - 20M	20
SFS - 3M	3	SFS - 12M	12	SFS - 22M	22
SFS - 4M	4	SFS - 15M	15	SFS - 25M	25
SFS - 6M	6	SFS - 16M	16		
SFS - 8M	8	SFS - 18M	18		

SI
Insert

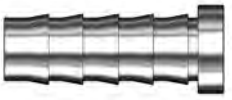

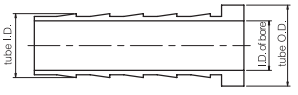

Fractional

Part No.	Tube O.D. D (inch)	Tube I.D. (inch)	I.D. of Bore	Part No.	Tube O.D. D (inch)	Tube I.D. (inch)	I.D. of Bore
SI - 3 - 2	3/16	1/8	2.28	SI 8 - 4	1/2	1/4	4.82
SI - 4 - 2	1/4	1/8	2.28	SI 8 - 6	1/2	3/8	7.87
SI - 4 - 3	1/4	3/16	3.55	SI 10 - 6	5/8	3/8	7.87
SI - 5 - 2	5/16	1/8	2.28	SI 10 - 8	5/8	1/2	11.17
SI - 5 - 3	5/16	3/16	3.04	SI 12 - 8	3/4	1/2	11.17
SI - 5 - 4	5/16	1/4	4.82	SI 12 - 10	3/4	5/8	14.22
SI - 6 - 3	3/8	3/16	3.04	SI 16 - 12	1	3/4	17.52
SI - 6 - 4	3/8	1/4	4.82				

• All dimensions in millimeters unless specified as “inch”. Dimension are for reference only, subject to change

SBHR
Bulkhead Retainer

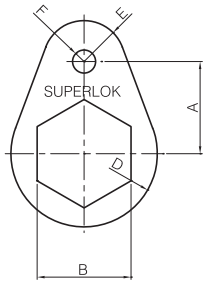

Part No.	A (inch)	B (inch)	C (inch)	D Dia (inch)	E Dia (inch)	F Dia (inch)
SBHR - 1	3/8	5/16	1/8	5/16	5/32	5/32
SBHR - 2	1/2	1/2	1/8	13/32	7/32	5/32
SBHR - 3	9/16	9/16	1/8	15/32	1/4	5/32
SBHR - 4 ②	5/8	5/8	1/8	1/2	9/32	5/32
SBHR - 5	1/16	11/16	1/8	9/16	5/16	5/32
SBHR - 6	3/4	3/4	1/8	5/8	11/32	5/32
SBHR - 8 ③	15/16	15/16	1/8	3/4	13/32	7/32
SBHR - 10 ④	1	1-1/16	1/8	13/16	13/32	7/32
SBHR - 12 ⑤	1-1/16	1-3/16	1/8	29/32	15/32	7/32
SBHR - 14	1-1/8	1-5/16	1/8	1-1/32	17/32	7/32
SBHR - 16	1-9/32	1-5/8	1/8	1-5/32	9/16	7/32
SBHR - 8M	11/16	18 mm	1/8	9/16	5/16	5/32
SBHR - 10M	15/16	22 mm	1/8	3/4	13/32	7/32

① Can be used with 3mm and 4mm bulkheads
② Can be used with 6mm bulkheads
③ Can be used with 12mm bulkheads
④ Can be used with 15mm and 16mm bulkheads
⑤ Can be used with 18mm bulkheads

SVP
Vent Protector

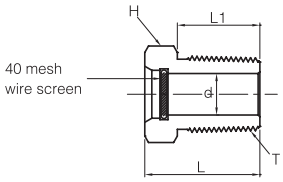

Part No.	T (NPT)	L	L1	d	H (inch)
SVP - 4N	1/4	19.81	14.22	7.11	9/16
SVP - 6N	3/8	20.57	14.22	10.41	11/16
SVP - 8N	1/2	26.16	19.05	12.70	7/8
SVP - 12N	3/4	26.92	19.05	18.29	1-1/16

* ISO Tapered Threads are available upon request

• All dimensions in millimeters unless specified as “inch”. Dimension are for reference only, subject to change

Tube Fittings (Compression Type)

www.sks-online.com

SUPERLOK®

i-Lok (i-Fitting)

www.superlok.com

INDEX

"i-Lok(i-Fitting) with Anti-Corrosive Ferrule"

i-Lok (i-Fitting)

Please look at below tube fittings installation photos which are necessary part of instrumentation tubing line in Oil & Gas, Off-shore, Chemical, Power, Shipbuilding, semiconduct & NGV industry.

Q1 Which one requires more tightening?

Q2 Which one is completely installed from pre-assembly?

As per our experience, the major cause of leakage on tube fitting occurred from improper installation. As a tube fitting manufacturer, to remove such a possible basic mistake from customer end, we develop 'i-Lok(i-Fitting)' with self-detecting function guiding correct installation even for non-skilled workers.

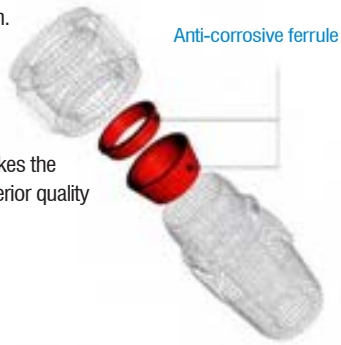

Also, it is strongly believe that ferrules are considered as the important part of tube fitting which makes the original function by its mechanism. The new designed ferrule, developed by BMT Co.,Ltd, has superior quality of corrosion resistance, tightness and low torque compare to other well-known manufacturer.

For the Both technical advantages on tube fitting, we promise you provide the best product.

Installation Process

Remove any possible failure of tube fitting installation by non-skilled worker or improper installation in advance.

As it can be seem on the above photos, normal tube fittings cannot detect improper installation but i-Lok(i-Fitting) provides workers self-detecting function during or after installation. Improper or wrong installation of tube fitting cause huge damage not only physical but also commercial wise,

This is the reason to use i-Lok(i-Fitting)

Perfect Installation Tube Fitting

Featured i-Lok(i-Fitting)s

- Reduce the installation time extremely.
- Assure the perfect installation.
- No required inspection gauge.
- Make cost-down greatly by the innovated productivity.
- Easy installation available even by non-skilled worker.

- 설치시간이 획기적으로 단축됩니다.
- 완벽한 설치시공을 보장합니다.
- 검사게이지가 필요하지 않습니다.
- 생산성 향상으로 경비를 획기적으로 절감할 수 있습니다.
- 비숙련공도 쉽게 시공이 가능합니다.

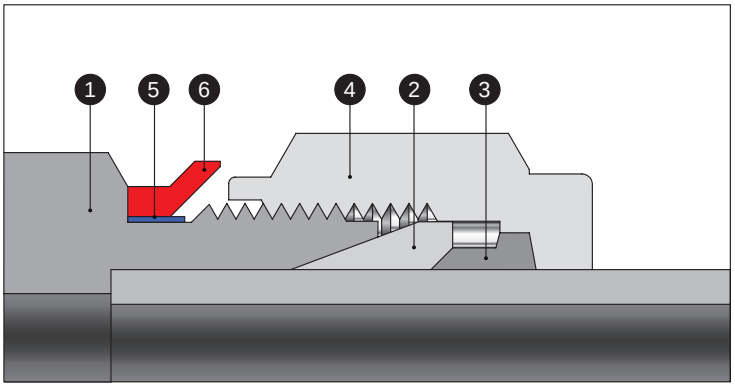

Structure

❶ BODY
❷ FRONT FERRULE
❸ BACK FERRULE
❹ NUT
❺ IDENTIFICATION RING
❻ CHECK RING

- i-Lok(i-Fitting)s is composed of Body, Front & Back Ferrules, Nut, Identification Ring and Check Ring
- i-Lok(i-Fitting)s has the structure to check the completion of installation separating Check Ring from the body

- 아이락(아이피팅)은 바디, 프론트 & 백 패럴, 너트, Identification Ring, Check Ring 으로 구성되어 있습니다.
- 아이락(아이피팅)은 체크링이 바디에서 완전히 분리됨으로써 시공이 완료되었음을 확인하는 구조입니다.

How the SUPERLOK i-Lok(i-Fitting) Works

- Able to see to separate the Check Ring from the products with eyes.
- Able to hear to separate the Check Ring from the products with ears.
- Able to touch to separate the Check Ring from the products with hands.

- Check Ring이 분리되었음을 눈으로 확인.
- Check Ring이 분리되었음을 소리로 확인.
- Check Ring이 분리되었음을 만져서 확인.

Installation Procedure

1 Prepare the required Integration Fitting composed of Body, Nut, Front & Back Ferrule,Check Ring and Identification Ring properly.
바디, 너트, 프런트 & 백 패럴, Check ring 과 Identification Ring 으로 구성되어 있는 인터그레이션피팅을 준비합니다.

2 Insert tube into the Fittings fully and then finger-tighten the nut.
튜브를 피팅안으로 완전히 삽입 후 손으로 너트를 돌려 Finger-Tight 상태를 유지한다.

3 Completion of installation is shown to rotate the Nut until Inspection Ring is taking off.
너트를 체결검사링이 몸체에서 분리될때까지 회전시키면 설치가 완료

Ordering information

Example : SMCI - 8 - 8N - SS

1 2 3

1. Type of fitting

To order, use "I" as a suffix to the desired Type of fitting ordering designation.

ex) SMC → SMCI
SUPERLOK Tube Fitting Male Connector → Integration Fitting Male Connector

2. Size of Fitting

Tube O.D (inch)	1/4	3/8	1/2	3/4	1
Designation	4	6	8	12	16
Tube O.D (mm)	6	10	12	20	25
Designation	6M	10M	12M	20M	25M

3. Material

AL- Aluminum
B - Brass
15 - Carbon Steel
SS(Blank) - Stainless Steel
M40- Monel Alloy 400
825 - Alloy 825
625 - Alloy 625
276 - Alloy C-276

Standard Size

The basic size of the superlok integration fittings are 1/4, 3/8,1/2, 3/4, 1 inch, and the rest of the size can also be custom made to suit customer's requirements.
슈퍼락 인터그레이션 피팅은 1/4, 3/8, 1/2, 3/4, 1inch가 기본사이즈이며, 기타 사이즈는 고객의 요청에 의해 주문제작이 가능합니다.

Check Ring & Identification Ring Color

-	Check Ring	Identification Ring
Inch Size	Red	Blue
Metric Size	Orange	Green

"Perfect installation is guaranteed by i-Lok(i-Fitting)"

SUI
Union

Standard

I-Lok(I-Fitting)

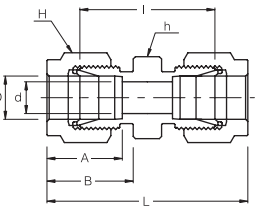

Connects Fractional Tubes

Part No.	Tube O.D. D (inch)	d Min	Width Across Flat		A	B	I	L
			h (inch)	H (inch)				
SUI - 4	1/4	4.82	1/2	9/16	15.24	17.78	26.16	40.89
SUI - 6	3/8	7.11	5/8	11/16	16.76	19.30	30.22	44.95
SUI - 8	1/2	10.41	13/16	7/8	22.86	21.84	30.98	51.30
SUI - 12	3/4	15.74	1-1/16	1-1/8	24.38	21.84	33.27	53.59
SUI - 16	1	22.35	1-3/8	1-1/2	31.24	26.41	40.38	64.77

Connects Metric Tubes

Part No.	Tube O.D. D	d Min	Width Across Flat		A	B	I	L
			h	H				
SUI - 6M	6	4.8	14	14	15.3	17.7	26.2	41.0
SUI - 8M	8	6.4	15	16	16.2	18.6	28.2	43.2
SUI - 10M	10	7.9	18	19	17.2	19.5	31.0	46.2
SUI - 12M	12	9.5	22	22	22.8	22.0	31.0	51.2
SUI - 16M	16	12.7	24	25	24.4	22.0	31.8	52.0
SUI - 18M	18	15.1	27	30	24.4	22.0	33.3	53.5
SUI - 20M	20	15.9	30	32	26.0	22.0	34.8	55.0
SUI - 25M	25	21.8	35	38	31.3	26.5	40.4	65.0

• All dimensions in millimeters unless specified as “inch”. Dimension are for reference only, subject to change
• Any size not in the list is available upon request.

SRUI
Reducing Union

Standard

I-Lok(I-Fitting)

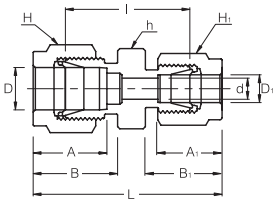

Connects Fractional Tubes

Part No.	Tube O.D.		d Min	Width Across Flat			A	A1	B	B1	I	L
	D (inch)	D1 (inch)		h (inch)	H (inch)	H1 (inch)						
SRUI - 6 - 4	3/8	1/4	4.82	5/8	11/16	9/16	16.76	15.24	19.30	17.78	28.44	43.18
SRUI - 8 - 4	1/2	1/4	4.82	13/16	7/8	9/16	22.86	15.24	21.84	17.78	29.46	46.99
SRUI - 8 - 6	1/2	3/8	7.11	13/16	7/8	11/16	22.86	16.76	21.84	19.30	30.98	48.51
SRUI - 12 - 4	3/4	1/4	4.82	1-1/16	1-1/8	9/16	24.38	15.24	21.84	17.78	31.75	49.27
SRUI - 12 - 6	3/4	3/8	7.11	1-1/16	1-1/8	11/16	24.38	16.76	21.84	19.30	33.27	50.80
SRUI - 12 - 8	3/4	1/2	10.41	1-1/16	1-1/8	7/8	24.38	22.86	21.84	21.84	33.27	53.59
SRUI - 16 - 8	1	1/2	10.41	1-3/8	1-1/2	7/8	31.24	22.86	26.41	21.84	39.50	63.24
SRUI - 16 - 12	1	3/4	15.74	1-3/8	1-1/2	1-1/8	31.24	24.38	26.41	21.84	39.00	62.73

Connects Metric Tubes

Part No.	Tube O.D.		d Min	Width Across Flat			A	A1	B	B1	I	L
	D	D1		h	H	H1						
SRUI - 8M - 6M	8	6	4.8	15	16	14	16.2	15.3	18.6	17.7	27.4	42.3
SRUI - 10M - 6M	10	6	4.8	18	19	14	17.2	15.3	19.5	17.7	29.5	44.5
SRUI - 10M - 8M	10	8	6.4	18	19	16	17.2	16.2	19.5	18.6	30.0	45.1
SRUI - 12M - 6M	12	6	4.8	22	22	14	22.8	15.3	22.0	17.7	29.5	47.0
SRUI - 12M - 8M	12	8	6.4	22	22	16	22.8	16.2	22.0	18.6	30.2	47.8
SRUI - 12M - 10M	12	10	7.9	22	22	19	22.8	17.2	22.0	19.5	31.0	48.7
SRUI - 16M - 12M	16	12	9.5	24	25	22	24.4	22.8	22.0	22.0	31.8	52.0
SRUI - 25M - 18M	25	18	15.1	35	38	30	31.3	24.4	26.5	22.0	38.6	61.0
SRUI - 25M - 20M	25	20	15.9	35	38	32	31.3	26.0	26.5	22.0	39.9	62.3

• All dimensions in millimeters unless specified as “inch”. Dimension are for reference only, subject to change
• Any size not in the list is available upon request.

SMCI

Male Connector

Standard

I-Lok(I-Fitting)

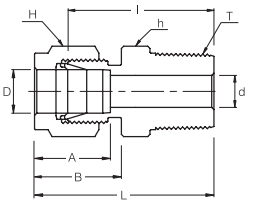

Connects Fractional Tube To Female NPT Thread

Part No.	Tube O.D. D (inch)	T (NPT)	d Min	Width Across Flat		A	B	I	L
				h (inch)	H (inch)				
SMCI - 4 - 6N	1/4	3/8	4.82	11/16	9/16	15.24	17.78	30.98	38.35
SMCI - 4 - 8N	1/4	1/2	4.82	7/8	9/16	15.24	17.78	37.33	44.70
SMCI - 6 - 4N	3/8	1/4	7.11	5/8	11/16	16.76	19.30	32.51	39.87
SMCI - 6 - 6N	3/8	3/8	7.11	11/16	11/16	16.76	19.30	32.51	39.87
SMCI - 6 - 8N	3/8	1/2	7.11	7/8	11/16	16.76	19.30	38.86	46.22
SMCI - 8 - 4N	1/2	1/4	7.11	13/16	7/8	22.86	21.84	33.27	43.43
SMCI - 8 - 6N	1/2	3/8	9.65	13/16	7/8	22.86	21.84	33.27	43.43
SMCI - 8 - 8N	1/2	1/2	10.41	7/8	7/8	22.86	21.84	38.86	49.02
SMCI - 8 - 12N	1/2	3/4	10.41	1-1/16	7/8	22.86	21.84	40.38	50.54
SMCI - 12 - 12N	3/4	3/4	15.74	1-1/16	1-1/8	24.38	21.84	40.38	50.54
SMCI - 16 - 16N	1	1	22.35	1-3/8	1-1/2	31.24	26.41	50.03	62.23

Connects Metric Tube To Female ISO Tapered Thread

Part No.	Tube O.D. D	T (PT)	d Min	Width Across Flat		A	B	I	L
				h	H				
SMCI - 6M - 2R	6	1/8	4.8	14	14	15.3	17.7	25.4	32.8
SMCI - 6M - 4R	6	1/4	4.8	14	14	15.3	17.7	30.5	37.9
SMCI - 6M - 6R	6	3/8	4.8	18	14	15.3	17.7	31.0	38.4
SMCI - 8M - 4R	8	1/4	6.4	15	16	16.2	18.6	31.2	38.7
SMCI - 8M - 6R	8	3/8	6.4	18	16	16.2	18.6	31.8	39.3
SMCI - 8M - 8R	8	1/2	6.4	22	16	16.2	18.6	38.1	45.6
SMCI - 10M - 6R	10	3/8	7.9	18	19	17.2	19.5	33.3	40.9
SMCI - 10M - 8R	10	1/2	7.9	22	19	17.2	19.5	38.9	46.5
SMCI - 12M - 8R	12	1/2	9.5	22	22	22.8	22.0	38.9	49.0
SMCI - 12M - 12R	12	3/4	9.5	27	22	22.8	22.0	40.4	50.5
SMCI - 16M - 8R	16	1/2	11.9	24	25	24.4	22.0	38.9	49.0
SMCI - 16M - 12R	16	3/4	12.7	27	25	24.4	22.0	40.4	50.5
SMCI - 18M - 8R	18	1/2	11.9	27	30	24.4	22.0	40.4	50.5
SMCI - 18M - 12R	18	3/4	15.1	27	30	24.4	22.0	40.4	50.5
SMCI - 20M - 8R	20	1/2	11.9	30	32	26.0	22.0	42.2	52.3
SMCI - 20M - 12R	20	3/4	15.9	30	32	26.0	22.0	42.2	52.3
SMCI - 25M - 12R	25	3/4	15.9	35	38	31.3	26.5	45.2	57.5
SMCI - 25M - 16R	25	1	21.8	35	38	31.3	26.5	50.0	62.3

• All dimensions in millimeters unless specified as “inch”. Dimension are for reference only, subject to change
• Any size not in the list is available upon request.

SFCI
Female Connector

Standard

I-Lok(I-Fitting)

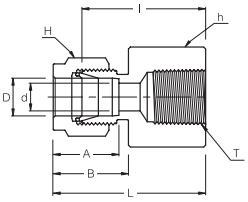

Connects Fractional Tubes To Male NPT Thread

Part No.	Tube O.D. D (inch)	T (NPT)	d Min	Width Across Flat		A	B	I	L
				h (inch)	H (inch)				
SFCI - 4 - 2N	1/4	1/8	4.82	9/16	9/16	15.24	17.78	23.87	31.24
SFCI - 4 - 4N	1/4	1/4	4.82	3/4	9/16	15.24	17.78	28.44	35.81
SFCI - 4 - 6N	1/4	3/8	4.82	7/8	9/16	15.24	17.78	30.22	37.59
SFCI - 4 - 8N	1/4	1/2	4.82	1-1/16	9/16	15.24	17.78	35.05	42.41
SFCI - 6 - 2N	3/8	1/8	7.11	5/8	11/16	16.76	19.30	25.40	32.76
SFCI - 6 - 4N	3/8	1/4	7.11	3/4	11/16	16.76	19.30	30.22	37.59
SFCI - 6 - 6N	3/8	3/8	7.11	7/8	11/16	16.76	19.30	31.75	39.11
SFCI - 6 - 8N	3/8	1/2	7.11	1-1/16	11/16	16.76	19.30	36.57	43.94
SFCI - 6 - 12N	3/8	3/4	7.11	1-5/16	11/16	16.76	19.30	40.38	47.75
SFCI - 8 - 4N	1/2	1/4	10.41	13/16	7/8	22.86	21.84	30.22	40.38
SFCI - 8 - 6N	1/2	3/8	10.41	7/8	7/8	22.86	21.84	31.75	41.91
SFCI - 8 - 8N	1/2	1/2	10.41	1-1/16	7/8	22.86	21.84	36.57	46.73
SFCI - 8 - 12N	1/2	3/4	10.41	1-5/16	7/8	22.86	21.84	38.10	48.26
SFCI - 12 - 8N	3/4	1/2	15.74	1-1/16	1-1/8	24.38	21.84	36.57	46.73
SFCI - 12 - 12N	3/4	3/4	15.74	1-5/16	1-1/8	24.38	21.84	38.10	48.26
SFCI - 16 - 12N	1	3/4	22.35	1-3/8	1-1/2	31.24	26.41	41.14	53.34
SFCI - 16 - 16N	1	1	22.35	1-5/8	1-1/2	31.24	26.41	50.03	62.23

Connects Metric Tubes To Male ISO Thread Thread

Part No.	Tube O.D. D	T (PT)	d Min	Width Across Flat		A	B	I	L
				h	H				
SFCI - 6M - 2R	6	1/8	4.8	14	14	15.3	17.7	23.9	31.3
SFCI - 6M - 4R	6	1/4	4.8	19	14	15.3	17.7	28.4	35.8
SFCI - 6M - 6R	6	3/8	4.8	22	14	15.3	17.7	30.2	37.6
SFCI - 8M - 4R	8	1/4	6.4	19	16	16.2	18.6	29.5	37.0
SFCI - 8M - 6R	8	3/8	6.4	22	16	16.2	18.6	31.0	38.5
SFCI - 8M - 8R	8	1/2	6.4	27	16	16.2	18.6	35.8	43.3
SFCI - 10M - 6R	10	3/8	7.9	22	19	17.2	19.5	31.8	39.4
SFCI - 10M - 8R	10	1/2	7.9	27	19	17.2	19.5	36.6	44.2
SFCI - 12M - 8R	12	1/2	9.5	27	22	22.8	22.0	36.6	46.7
SFCI - 12M - 12R	12	3/4	9.5	35	22	22.8	22.0	38.9	49.0
SFCI - 16M - 8R	16	1/2	12.7	27	25	24.4	22.0	36.8	46.9
SFCI - 20M - 12R	20	3/4	15.9	35	32	26.0	22.0	39.6	49.7
SFCI - 25M - 12R	25	3/4	21.8	35	38	31.3	26.5	41.1	53.4
SFCI - 25M - 16R	25	1	21.8	41	38	31.3	26.5	50.0	62.3

• All dimensions in millimeters unless specified as “inch”. Dimension are for reference only, subject to change
• Any size not in the list is available upon request.

SGCI
Gauge Connector

Standard

I-Lok(I-Fitting)

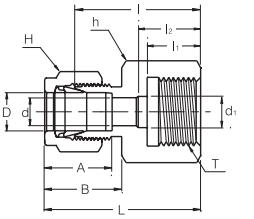

Connects Fractional Tubes To ISO Parallel Thread

Part No.	Tube O.D. D (inch)	T (PF)	d Min	d_1	Width Across Flat		A	B	l	l_1	l_2	L
					h (inch)	H (inch)						
SGCI - 4 - 4G	1/4	1/4	4.82	5.58	3/4	9/16	15.24	17.78	30.22	13.00	17.00	37.59
SGCI - 4 - 6G	1/4	3/8	4.82	6.60	15/16	9/16	15.24	17.78	30.22	14.20	20.30	37.59
SGCI - 4 - 8G	1/4	1/2	4.82	6.60	1-1/16	9/16	15.24	17.78	36.07	18.80	24.90	43.43
SGCI - 6 - 4G	3/8	1/4	5.58	-	3/4	11/16	16.76	19.30	31.75	13.00	-	39.12
SGCI - 6 - 6G	3/8	3/8	6.60	-	15/16	11/16	16.76	19.30	31.24	14.20	-	38.61
SGCI - 6 - 8G	3/8	1/2	7.11	-	1-1/16	11/16	16.76	19.30	34.54	18.80	-	41.91
SGCI - 8 - 4G	1/2	1/4	5.58	-	7/8	7/8	22.86	21.84	31.80	13.00	-	41.95
SGCI - 8 - 6G	1/2	3/8	6.60	-	15/16	7/8	22.86	21.84	34.29	14.20	-	44.45
SGCI - 8 - 8G	1/2	1/2	7.11	7.11	1-1/16	7/8	22.86	21.84	38.10	18.80	-	48.26

Connects Metric Tubes To ISO Parallel Thread

Part No.	Tube O.D. D	T (PF)	d Min	d_1	Width Across Flat		A	B	l	l_1	l_2	L
					h	H						
SGCI - 6M - 4G	6	1/4	4.8	5.5	19	14	15.3	17.7	30.2	13	17	37.6
SGCI - 6M - 6G	6	3/8	4.8	6.5	24	14	15.3	17.7	30.2	14	20	37.6
SGCI - 6M - 8G	6	1/2	4.8	7.0	27	14	15.3	17.7	36.1	19	25	43.5
SGCI - 8M - 4G	8	1/4	5.5	5.5	19	16	16.2	18.6	31.0	13	-	38.5
SGCI - 8M - 6G	8	3/8	6.5	6.5	24	16	16.2	18.6	28.7	14	-	36.2
SGCI - 8M - 8G	8	1/2	7.0	7.0	27	16	16.2	18.6	33.5	19	-	41.0
SGCI - 10M - 4G	10	1/4	5.5	5.5	19	19	17.2	19.5	31.8	13	-	39.4
SGCI - 10M - 6G	10	3/8	6.5	6.5	24	19	17.2	19.5	31.2	14	-	38.8
SGCI - 10M - 8G	10	1/2	7.0	7.0	27	19	17.2	19.5	34.5	19	-	42.1
SGCI - 12M - 4G	12	1/4	5.5	5.5	22	22	22.8	22.0	31.8	13	-	41.9
SGCI - 12M - 6G	12	3/8	6.5	6.5	24	22	22.8	22.0	34.3	14	-	44.4
SGCI - 12M - 8G	12	1/2	7.0	7.0	27	22	22.8	22.0	38.1	19	-	48.2
SGCI - 20M - 8G	20	1/2	7.0	7.0	30	32	26.0	22.0	44.2	19	-	54.3

• All dimensions in millimeters unless specified as “inch”. Dimension are for reference only, subject to change
• Any size not in the list is available upon request.

SUEI
Union Elbow

Standard

I-Lok(I-Fitting)

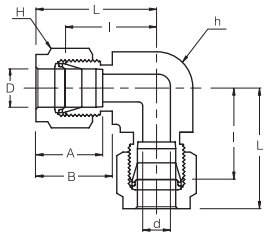

Connects Fractional Tubes

Part No.	Tube O.D. D (inch)	d Min	Width Across Flat		A	B	I	L
			h (inch)	H (inch)				
SUEI - 4	1/4	4.82	1/2	9/16	15.24	17.78	20.10	27.40
SUEI - 6	3/8	7.11	5/8	11/16	16.76	19.30	23.11	30.48
SUEI - 8	1/2	10.41	13/16	7/8	22.86	21.84	25.90	36.06
SUEI - 12	3/4	15.74	1-1/16	1-1/8	24.38	21.84	29.71	39.87
SUEI - 16	1	22.35	1-3/8	1-1/2	31.24	26.41	36.83	49.02

Connects Metric Tubes

Part No.	Tube O.D. D	d Min	Width Across Flat		A	B	I	L
			h	H				
SUEI - 6M	6	4.8	12.7	14	15.3	17.7	19.6	27.0
SUEI - 8M	8	6.4	15.9	16	16.2	18.6	22.4	29.9
SUEI - 10M	10	7.9	17.5	19	17.2	19.5	23.9	31.5
SUEI - 12M	12	9.5	20.6	22	22.8	22.0	25.9	36.0
SUEI - 16M	16	12.7	23.8	25	24.4	22.0	27.9	38.0
SUEI - 18M	18	15.1	27.0	30	24.4	22.0	29.7	39.8
SUEI - 20M	20	15.9	34.9	32	26.0	22.0	34.5	44.6
SUEI - 25M	25	21.8	34.9	38	31.3	26.5	36.8	49.1

• All dimensions in millimeters unless specified as “inch”. Dimension are for reference only, subject to change
• Any size not in the list is available upon request.

SHMEI

45° Male Elbow

Standard Type

I-Lok(I-Fitting)

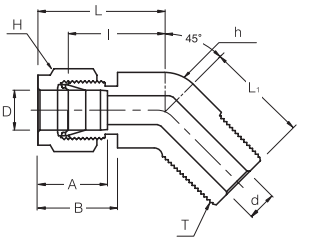

Connects Fractional Tubes To Female NPT Thread

Part No.	Tube O.D. D (inch)	T (NPT)	d Min	Width Across Flat		A	B	I	L	L_1
				h (inch)	H (inch)					
SHMEI - 4 - 2N	1/4	1/8	4.82	1/2	9/16	15.24	17.78	17.27	24.63	16.51
SHMEI - 4 - 4N	1/4	1/4	4.82	1/2	9/16	15.24	17.78	17.27	24.63	21.08
SHMEI - 6 - 2N	3/8	1/8	4.82	5/8	11/16	16.76	19.30	20.57	27.94	18.28
SHMEI - 6 - 4N	3/8	1/4	7.11	5/8	11/16	16.76	19.30	20.57	27.94	22.86
SHMEI - 6 - 6N	3/8	3/8	7.11	13/16	11/16	16.76	19.30	21.84	29.21	24.13
SHMEI - 8 - 6N	1/2	3/8	9.65	13/16	7/8	22.86	21.84	21.84	32.00	24.13
SHMEI - 8 - 8N	1/2	1/2	10.41	13/16	7/8	22.86	21.84	21.84	32.00	28.95

Connects Metric Tubes To Female ISO Tapered Thread

Part No.	Tube O.D. D	T (PT)	d Min	Width Across Flat		A	B	I	L	L_1
				h	H					
SHMEI - 6M - 2R	6	1/8	4.8	12.7	14	15.3	17.7	17.3	24.6	16.5
SHMEI - 6M - 4R	6	1/4	4.8	12.7	14	15.3	17.7	17.3	24.6	21.1
SHMEI - 12M - 6R	12	3/8	9.5	20.6	22	22.8	21.8	21.8	32.0	24.1
SHMEI - 12M - 8R	12	1/2	9.5	20.6	22	22.8	21.8	21.8	32.0	29.0

• All dimensions in millimeters unless specified as "inch". Dimension are for reference only, subject to change
• Any size not in the list is available upon request.

SMEI
Male Elbow

Standard

I-Lok(I-Fitting)

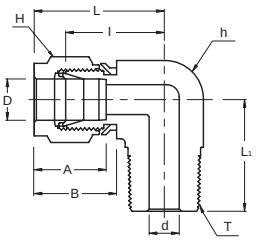

Connects Fractional Tube To Female NPT Thread

Part No.	Tube O.D. D (inch)	T (NPT)	d Min	Width Across Flat		A	B	I	L	L_1
				h (inch)	H (inch)					
SMEI - 4 - 2N	1/4	1/8	4.82	1/2	9/16	15.24	17.78	19.55	26.92	18.79
SMEI - 4 - 4N	1/4	1/4	4.82	1/2	9/16	15.24	17.78	19.55	26.92	23.36
SMEI - 4 - 6N	1/4	3/8	4.82	5/8	9/16	15.24	17.78	22.35	29.71	26.16
SMEI - 4 - 8N	1/4	1/2	4.82	13/16	9/16	15.24	17.78	24.38	31.75	33.02
SMEI - 6 - 2N	3/8	1/8	4.82	5/8	11/16	16.76	19.30	23.11	30.48	20.82
SMEI - 6 - 4N	3/8	1/4	7.11	5/8	11/16	16.76	19.30	23.11	30.48	25.40
SMEI - 6 - 6N	3/8	3/8	7.11	5/8	11/16	16.76	19.30	23.87	31.24	26.16
SMEI - 6 - 8N	3/8	1/2	7.11	13/16	11/16	16.76	19.30	25.90	33.27	33.02
SMEI - 6 - 12N	3/8	3/4	7.11	1-1/16	11/16	16.76	19.30	29.71	37.08	36.83
SMEI - 8 - 4N	1/2	1/4	7.11	13/16	7/8	22.86	21.84	25.90	36.06	28.19
SMEI - 8 - 6N	1/2	3/8	9.65	13/16	7/8	22.86	21.84	25.90	36.06	28.19
SMEI - 8 - 8N	1/2	1/2	10.41	13/16	7/8	22.86	21.84	25.90	36.06	33.02
SMEI - 8 - 12N	1/2	3/4	10.41	1-1/16	7/8	22.86	21.84	29.71	39.87	36.83
SMEI - 12 - 8N	3/4	1/2	11.93	1-1/16	1-1/8	24.38	21.84	29.71	39.87	36.83
SMEI - 12 - 12N	3/4	3/4	15.74	1-1/16	1-1/8	24.38	21.84	29.71	39.87	36.83
SMEI - 16 - 12N	1	3/4	15.74	1-3/8	1-1/2	31.24	26.41	36.83	49.02	41.65
SMEI - 16 - 16N	1	1	22.35	1-3/8	1-1/2	31.24	26.41	36.83	49.02	46.48

Connects Metric Tubes To Female ISO Tapered Thread

Part No.	Tube O.D. D	T (PT)	d Min	Width Across Flat		A	B	I	L	L_1
				h	H					
SMEI - 6M - 2R	6	1/8	4.8	12.7	14	15.3	17.7	19.6	27.0	18.8
SMEI - 6M - 4R	6	1/4	4.8	12.7	14	15.3	17.7	19.6	27.0	23.4
SMEI - 6M - 6R	6	3/8	4.8	15.9	14	15.3	17.7	22.4	29.8	26.2
SMEI - 8M - 4R	8	1/4	6.4	14.3	16	16.2	18.6	21.3	28.8	24.4
SMEI - 8M - 6R	8	3/8	6.4	15.9	16	16.2	18.6	23.1	30.6	26.2
SMEI - 8M - 8R	8	1/2	6.4	20.6	16	16.2	18.6	25.1	32.6	33.0
SMEI - 10M - 6R	10	3/8	7.9	17.5	19	17.2	19.5	23.9	31.5	26.2
SMEI - 10M - 8R	10	1/2	7.9	20.6	19	17.2	19.5	25.9	33.5	33.0
SMEI - 12M - 8R	12	1/2	9.5	20.6	22	22.8	22.0	25.9	36.0	33.0
SMEI - 12M - 12R	12	3/4	9.5	27.0	22	22.8	22.0	29.7	39.8	36.8
SMEI - 16M - 8R	16	1/2	11.9	23.8	25	24.4	22.0	27.9	38.0	35.1
SMEI - 18M - 8R	18	1/2	11.9	27.0	30	24.4	22.0	29.7	39.8	36.8
SMEI - 18M - 12R	18	3/4	15.1	27.0	30	24.4	22.0	29.7	39.8	36.8
SMEI - 20M - 8R	20	1/2	11.9	34.9	32	26.0	22.0	34.5	44.6	41.7
SMEI - 20M - 12R	20	3/4	15.9	34.9	32	26.0	22.0	34.5	44.6	41.7
SMEI - 25M - 12R	25	3/4	15.9	34.9	38	31.3	26.5	36.8	49.1	41.7
SMEI - 25M - 16R	25	1	21.8	34.9	38	31.3	26.5	36.8	49.1	46.5

• All dimensions in millimeters unless specified as “inch”. Dimension are for reference only, subject to change
• Any size not in the list is available upon request.

SPHMEI

45° Positionable Male Elbow

Standard

I-Lok(I-Fitting)

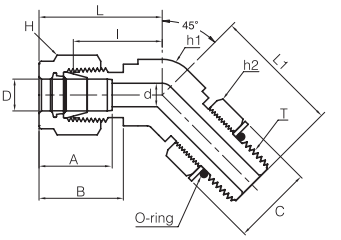

Connects Fractional Tubes To SAE/MS Straight Thread

Part No.	Tube O.D. D (inch)	Straight Thread T(U)	d Min	Width Across Flat			A	B	I	L	L1	C
				h1 (inch)	h2 (inch)	H (inch)						
SPHMEI - 4 - 4U	1/4	7/16-20	4.83	1/2	9/16	9/16	15.24	17.78	18.29	25.64	25.65	16.51
SPHMEI - 6 - 6U	3/8	9/16-18	7.11	5/8	11/16	11/16	16.76	19.30	20.57	27.94	28.19	20.07
SPHMEI - 8 - 8U	1/2	3/4-16	10.41	13/16	7/8	7/8	22.86	21.84	21.84	32.00	32.26	25.65
SPHMEI - 12 - 12U	3/4	1-1/16-12	15.75	1-1/8	1-1/4	1-1/8	24.38	24.84	29.72	39.88	47.24	36.58
SPHMEI - 16 - 16U	1	1-5/16-12	22.35	1-3/8	1-1/2	1-1/2	31.24	26.42	35.31	47.50	50.55	43.94

Connects Metric Tubes To SAE/MS Straight Thread

Part No.	Tube O.D. D	Straight Thread T(U)	d Min	Width Across Flat			A	B	I	L	L1	C
				h1	h2	H						
SPHMEI - 6M - 4U	6	7/16-20	4.8	12.7	14.3	14	15.2	17.7	18.3	25.6	25.6	16.5
SPHMEI - 12M - 8U	12	3/4-16	9.5	20.6	22.2	22	22.8	21.8	21.8	32.0	32.2	25.6
SPHMEI - 18M - 12U	18	1-1/16-12	15.1	28.6	31.7	30	24.3	24.8	29.7	39.8	47.2	36.6
SPHMEI - 25M - 16U	25	1-5/16-12	21.8	34.9	38.1	38	31.2	26.4	35.3	47.5	50.5	43.9

• All dimensions in millimeters unless specified as “inch”. Dimension are for reference only, subject to change
• Any size not in the list is available upon request.

SPMEI
Positionable Male Elbow

Standard

I-Lok(I-Fitting)

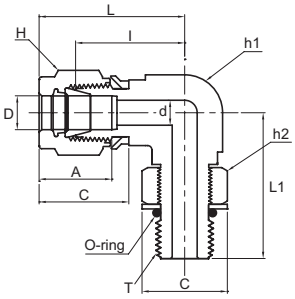

Connects Fractional Tubes To SAE/MS Straight Thread

Part No.	Tube O.D. D (inch)	Straight Thread T(U)	d Min	Width Across Flat			A	B	I	L	L1	C
				h1 (inch)	h2 (inch)	H (inch)						
SPMEI - 4 - 4U	1/4	7/16-20	4.83	1/2	9/16	9/16	15.24	17.78	21.08	28.45	28.45	16.51
SPMEI - 4 - 6U	1/4	9/16-18	4.83	5/8	11/16	9/16	15.24	17.78	23.11	30.48	32.26	20.07
SPMEI - 6 - 6U	3/8	9/16-18	7.11	5/8	11/16	11/16	16.76	19.30	24.64	32.00	32.26	20.07
SPMEI - 6 - 8U	3/8	3/4-16	7.11	13/16	7/8	11/16	16.76	19.30	27.43	34.80	37.85	25.65
SPMEI - 8 - 8U	1/2	3/4-16	10.41	13/16	7/8	7/8	22.86	21.84	27.43	37.59	37.85	25.65
SPMEI - 12 - 12U	3/4	1-1/16-12	15.75	1-1/16	1-1/4	1-1/8	24.38	24.84	31.24	41.40	48.77	36.58
SPMEI - 16 - 16U	1	1-5/16-12	22.35	1-3/8	1-1/2	1-1/2	31.24	26.42	38.35	50.55	53.59	43.94

Connects Metric Tubes To SAE/MS Straight Thread

Part No.	Tube O.D. D	Straight Thread T(U)	d Min	Width Across Flat			A	B	I	L	L1	C
				h1	h2	H						
SPMEI - 6M - 4U	6	7/16-20	4.8	12.7	14.3	14	15.2	17.7	21.1	28.4	28.6	16.5
SPMEI - 12M - 8U	12	3/4-16	9.5	20.6	22.2	22	22.8	21.8	27.4	37.5	37.6	25.6
SPMEI - 18M - 12U	18	1-1/16-12	15.1	27	31.7	30	24.3	24.8	31.2	41.4	48.8	36.5
SPMEI - 25M - 16U	25	1-5/16-12	21.8	34.9	38.1	38	31.2	26.4	38.4	50.5	53.6	43.9

• All dimensions in millimeters unless specified as “inch”. Dimension are for reference only, subject to change
• Any size not in the list is available upon request.

SPMEI

Positionable Male Elbow

Standard

I-Lok(I-Fitting)

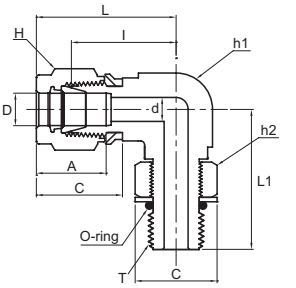

Connects Fractional Tubes To Female ISO Parallel Thread

Part No.	Tube O.D. D (inch)	T (PF)	d Min	Width Across Flat			A	B	I	L	L1	C
				h1 (inch)	h2 (inch)	H (inch)						
SPMEI - 4 - 2G	1/4	1/8	4.06	1/2	9/16	9/16	15.24	17.78	19.56	26.92	26.42	17.27
SPMEI - 4 - 4G	1/4	1/4	4.83	5/8	3/4	9/16	15.24	17.78	21.59	28.96	32.26	22.86
SPMEI - 6 - 4G	3/8	1/4	5.84	5/8	3/4	11/16	16.76	19.30	23.11	30.48	32.26	22.86
SPMEI - 6 - 6G	3/8	3/8	7.11	13/16	7/8	11/16	16.76	19.30	25.91	33.27	37.08	26.42
SPMEI - 8 - 4G	3/8	1/4	5.84	13/16	3/4	7/8	22.86	21.84	25.91	36.07	35.05	26.42
SPMEI - 8 - 6G	1/2	3/8	7.87	13/16	7/8	7/8	22.86	21.84	25.91	36.07	37.08	22.86
SPMEI - 8 - 8G	1/2	1/2	10.41	15/16	1-1/16	7/8	22.86	21.84	27.94	38.10	43.43	26.42
SPMEI - 12 - 8G	3/4	1/2	11.94	1-1/16	1-1/16	1-1/8	24.38	21.84	29.72	39.88	45.21	32.00
SPMEI - 12 - 12G	3/4	3/4	15.75	1-1/16	1-3/8	1-1/8	24.38	21.84	29.72	39.88	48.77	41.15
SPMEI - 16 - 12G	1	3/4	15.75	1-3/8	1-3/8	1-1/2	31.24	26.42	36.83	49.02	53.34	41.15
SPMEI - 16 - 16G	1	1	19.81	1-3/8	1-5/8	1-1/2	31.24	26.42	36.83	49.02	53.59	48.51

Connects Metric Tubes To Female ISO Parallel Thread

Part No.	Tube O.D. D	T (PF)	d Min	Width Across Flat			A	B	I	L	L1	C
				h1	h2	H						
SPMEI - 6M - 2G	6	1/8	4.0	12.7	14.3	14	15.3	17.7	19.6	27.0	26.4	17.3
SPMEI - 6M - 4G	6	1/4	4.8	22.2	19	14	15.3	17.7	21.6	29.0	32.3	22.9
SPMEI - 8M - 2G	8	1/8	4.0	14.3	14.3	16	16.2	18.6	21.3	28.8	27.4	17.3
SPMEI - 8M - 4G	8	1/4	5.9	22.2	19	16	16.2	18.6	22.4	29.9	32.2	22.9
SPMEI - 10M - 4G	10	1/4	5.9	20.6	19	19	17.2	19.5	25.9	33.5	35.0	22.9
SPMEI - 10M - 6G	10	3/8	7.9	20.6	22.2	19	17.2	19.5	25.9	33.5	37.1	26.4
SPMEI - 12M - 4G	12	1/4	5.9	20.6	19	22	22.8	22.0	25.9	36.0	35.0	22.9
SPMEI - 12M - 8G	12	1/2	9.5	23.8	27	22	22.8	22.0	27.9	38.0	43.4	32.0
SPMEI - 12M - 12G	12	3/4	9.5	27	34.9	22	22.8	22.0	29.7	39.8	48.8	41.1

• All dimensions in millimeters unless specified as “inch”. Dimension are for reference only, subject to change
• Any size not in the list is available upon request.

SFEI
Female Elbow

Standard

I-Lok(I-Fitting)

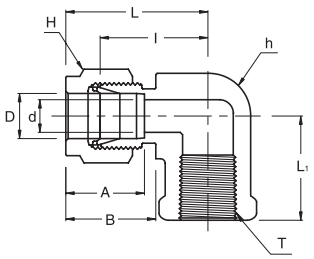

Connects Fractional Tubes To Male NPT Thread

Part No.	Tube O.D. D (inch)	T (NPT)	d Min	Width Across Flat		A	B	I	L	L_1
				h (inch)	H (inch)					
SFEI - 4 - 2N	1/4	1/8	4.82	1/2	9/16	15.24	17.78	19.55	26.92	19.05
SFEI - 4 - 4N	1/4	1/4	4.82	11/16	9/16	15.24	17.78	22.35	29.71	22.35
SFEI - 4 - 6N	1/4	3/8	4.82	13/16	9/16	15.24	17.78	24.38	31.75	22.35
SFEI - 4 - 8N	1/4	1/2	4.82	1	9/16	15.24	17.78	27.17	34.54	28.44
SFEI - 6 - 2N	3/8	1/8	7.11	5/8	11/16	16.76	19.30	23.11	30.48	19.05
SFEI - 6 - 4N	3/8	1/4	7.11	11/16	11/16	16.76	19.30	23.87	31.24	22.35
SFEI - 6 - 6N	3/8	3/8	7.11	13/16	11/16	16.76	19.30	25.90	33.27	22.35
SFEI - 6 - 8N	3/8	1/2	7.11	1	11/16	16.76	19.30	28.70	36.06	28.44
SFEI - 8 - 4N	1/2	1/4	10.41	13/16	7/8	22.86	21.84	25.90	36.06	22.35
SFEI - 8 - 6N	1/2	3/8	10.41	13/16	7/8	22.86	21.84	25.90	36.06	22.35
SFEI - 8 - 8N	1/2	1/2	10.41	1	7/8	22.86	21.84	28.70	38.86	37.00
SFEI - 12 - 8N	3/4	1/2	15.74	1-1/16	1-1/8	24.38	21.84	29.71	39.87	28.44
SFEI - 12 - 12N	3/4	3/4	15.74	1-3/8	1-1/8	24.38	21.84	34.54	44.70	31.75
SFEI - 16 - 12N	1	3/4	22.35	1-3/8	1-1/2	31.24	26.41	36.83	49.02	31.75
SFEI - 16 - 16N	1	1	22.35	1-11/16	1-1/2	31.24	26.41	41.40	53.59	38.10

Connects Metric Tubes To Male ISO Tapered Thread

Part No.	Tube O.D. D	T (PT)	d Min	Width Across Flat		A	B	I	L	L_1
				h	H					
SFEI - 6M - 4R	6	1/4	4.8	17.4	14	15.3	17.7	22.4	29.8	22.40
SFEI - 6M - 6R	6	3/8	4.8	20.6	14	15.3	17.7	24.4	31.7	22.40
SFEI - 6M - 8R	6	1/2	4.8	25.4	14	15.3	17.7	27.2	34.6	28.40
SFEI - 8M - 4R	8	1/4	6.4	17.4	16	16.2	18.6	23.1	30.6	22.40
SFEI - 8M - 8R	8	1/2	6.4	25.4	16	16.2	18.6	28.0	35.2	28.40
SFEI - 10M - 4R	10	1/4	7.9	17.4	19	17.2	19.5	25.9	33.5	22.40
SFEI - 10M - 6R	10	3/8	7.9	20.6	19	17.2	19.5	25.9	33.5	22.40
SFEI - 12M - 6R	12	3/8	9.5	20.6	22	22.8	22.0	25.9	36.2	22.35
SFEI - 12M - 8R	12	1/2	9.5	25.4	22	22.8	22.0	28.7	38.8	28.40

• All dimensions in millimeters unless specified as “inch”. Dimension are for reference only, subject to change
• Any size not in the list is available upon request.

SUTI
Union Tee

Standard

I-Lok(I-Fitting)

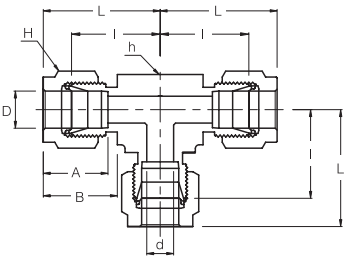

Connects Fractional Tubes

Part No.	Tube O.D. D (inch)	d Min	Width Across Flat		A	B	I	L
			h (inch)	H (inch)				
SUTI - 4	1/4	4.82	1/2	9/16	15.24	17.78	20.10	27.40
SUTI - 6	3/8	7.11	5/8	11/16	16.76	19.30	23.11	30.48
SUTI - 8	1/2	10.41	13/16	7/8	22.86	21.84	25.90	36.06
SUTI - 12	3/4	15.74	1-1/16	1-1/8	24.38	21.84	29.71	39.87
SUTI - 16	1	22.35	1-3/8	1-1/2	31.24	26.41	36.83	49.02

Connects Metric Tubes

Part No.	Tube O.D. D	d Min	Width Across Flat		A	B	I	L
			h	H				
SUTI - 6M	6	4.8	12.7	14	15.3	17.7	19.6	27.0
SUTI - 8M	8	6.4	15.9	16	16.2	18.6	22.4	29.9
SUTI - 10M	10	7.9	17.5	19	17.2	19.5	23.9	31.5
SUTI - 12M	12	9.5	20.6	22	22.8	22.0	25.9	36.0
SUTI - 16M	16	12.7	25.4	25	24.4	22.0	28.7	38.8
SUTI - 18M	18	15.1	27.0	30	24.4	22.0	29.7	38.8
SUTI - 20M	20	15.9	34.9	32	26.0	22.0	34.5	44.6
SUTI - 25M	25	21.8	34.9	38	31.3	26.5	36.8	49.1

• All dimensions in millimeters unless specified as “inch”. Dimension are for reference only, subject to change
• Any size not in the list is available upon request.

SRUTI
Reducing Union Tee

Standard

I-Lok(I-Fitting)

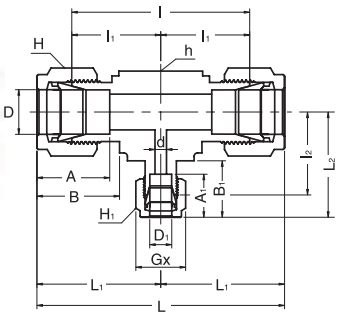

Connects Fractional Tubes

Part No.	Tube O.D.		d Min	Width Across Flat			A	A1	B	B1	I	I1	I2	L	L1	L2
	D (inch)	D_1 (inch)		h (inch)	H (inch)	H_1 (inch)										
SRUTI - 6 - 4	3/8	1/4	4.82	5/8	11/16	9/16	16.76	15.24	19.30	17.78	46.22	23.11	21.59	60.96	30.48	28.95
SRUTI - 8 - 4	1/2	1/4	4.82	13/16	7/8	9/16	22.86	15.24	21.84	17.78	51.81	25.90	24.38	72.13	36.06	31.75
SRUTI - 8 - 6	1/2	3/8	7.11	13/16	7/8	11/16	22.86	16.76	21.84	19.30	51.81	25.90	25.90	72.13	36.06	33.27
SRUTI - 12 - 6	3/4	3/8	7.11	1 1/16	1 1/8	11/16	24.38	16.76	21.84	19.30	59.43	29.71	29.71	79.75	39.87	37.08
SRUTI - 12 - 8	3/4	1/2	10.41	1 1/16	1 1/8	7/8	24.38	22.86	21.84	21.84	59.43	29.71	29.71	79.75	39.87	39.87
SRUTI - 16 - 6	1	3/8	7.11	1 3/8	1 1/2	1 1/16	31.24	16.76	26.41	19.30	73.66	36.83	34.54	98.04	49.02	41.91
SRUTI - 16 - 8	1	1/2	10.41	1 3/8	1 1/2	7/8	31.24	21.84	26.41	22.86	73.66	36.83	34.54	98.04	49.02	44.70
SRUTI - 16 - 12	1	3/4	15.74	1 3/8	1 1/2	1 1/8	31.24	24.38	26.41	21.84	73.66	36.83	34.54	98.04	49.02	44.70

Connects Metric Tubes

Part No.	Tube O.D.		d Min	Width Across Flat			A	A1	B	B1	I	I1	I2	L	L1	L2
	D	D_1		h	H	H_1										
SRUTI - 8M - 6M	8	6	4.8	15.9	16	14	16.8	15.3	19.2	17.8	46.2	23.1	21.6	62.4	31.2	29.0
SRUTI - 12M - 6M	12	6	4.8	20.6	22	14	23.0	15.3	22.0	17.8	51.8	25.9	25.9	72.5	36.2	33.3
SRUTI - 12M - 8M	12	8	6.4	20.6	22	16	23.0	16.8	22.0	19.2	51.8	25.9	25.1	72.5	36.2	33.2
SRUTI - 12M - 10M	12	10	7.9	20.6	22	19	23.0	17.5	22.0	19.8	51.8	25.9	25.9	72.5	36.2	33.8
SRUTI - 18M - 10M	18	10	7.9	27.0	30	19	24.8	17.5	22.5	19.8	59.4	29.7	29.7	81.7	40.3	37.6
SRUTI - 18M - 12M	18	12	9.5	27.0	30	22	24.8	23.0	25.5	22.2	59.4	29.7	29.7	80.7	40.3	40.0
SRUTI - 25M -12M	25	12	9.5	34.9	38	22	31.3	23.0	26.6	22.2	73.6	36.8	34.5	98.2	49.1	44.8
SRUTI - 25M - 18M	25	18	15.1	34.9	38	30	31.3	24.8	26.6	22.5	73.6	36.8	34.5	98.2	49.1	45.1
SRUTI - 25M - 20M	25	20	15.9	34.9	38	32	31.3	26.6	26.6	22.6	73.6	36.8	34.5	98.2	49.1	45.2

• All dimensions in millimeters unless specified as “inch”. Dimension are for reference only, subject to change
• Any size not in the list is available upon request.

SMBTI
Male
Branch Tee

Standard

I-Lok(I-Fitting)

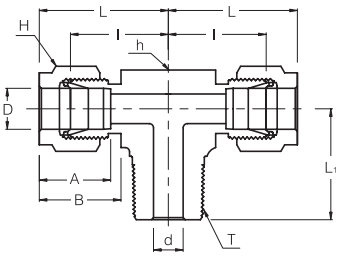

Connects Fractional Tubes To Female NPT Thread

Part No.	Tube O.D. D (inch)	T (NPT)	d Min	Width Across Flat		A	B	I	L	L_1
				h (inch)	H (inch)					
SMBTI - 4 - 2N	1/4	1/8	4.82	1/2	9/16	15.24	17.78	19.55	26.92	18.79
SMBTI - 4 - 4N	1/4	1/4	4.82	1/2	9/16	15.24	17.78	19.55	26.92	23.36
SMBTI - 6 - 4N	3/8	1/4	7.11	5/8	11/16	16.76	19.30	23.11	30.48	25.40
SMBTI - 6 - 6N	3/8	3/8	7.11	5/8	11/16	16.76	19.30	23.10	30.48	28.19
SMBTI - 8 - 6N	1/2	3/8	9.65	13/16	7/8	22.86	21.84	25.90	36.06	28.19
SMBTI - 8 - 8N	1/2	1/2	10.41	13/16	7/8	22.86	21.84	25.90	36.06	33.02
SMBTI - 12 - 12N	3/4	3/4	15.74	1-1/16	1-1/8	24.38	21.84	29.71	39.87	36.83

Connects Metric Tubes To Female ISO Tapered Thread

Part No.	Tube O.D. D	T (PT)	d Min	Width Across Flat		A	B	I	L	L_1
				h	H					
SMBTI - 6M - 2R	6	1/8	4.8	12.7	14	15.3	17.7	19.6	27.0	18.8
SMBTI - 6M - 4R	6	1/4	4.8	12.7	14	15.3	17.7	19.6	27.0	23.4
SMBTI - 8M - 4R	8	1/4	6.4	15.9	16	16.2	18.6	22.4	29.9	25.4
SMBTI - 10M - 4R	10	1/4	7.1	17.5	19	17.2	19.5	23.9	31.5	28.2
SMBTI - 10M - 6R	10	3/8	7.9	17.5	19	17.2	19.5	23.9	31.5	28.2
SMBTI - 12M - 4R	12	1/4	7.1	20.6	22	22.8	22.0	25.9	36.0	28.2
SMBTI - 12M - 6R	12	3/8	9.5	20.6	22	22.8	22.0	25.9	36.0	28.2
SMBTI - 12M - 8R	12	1/2	9.5	20.6	22	22.8	22.0	25.9	36.0	33.0
SMBTI - 16M - 6R	16	3/8	9.5	25.4	25	24.4	22.0	27.9	38.0	30.2
SMBTI - 16M - 8R	16	1/2	11.9	25.4	25	24.4	22.0	27.9	38.0	35.1
SMBTI - 20M - 12R	20	3/4	15.9	31.8	32	26.0	22.0	34.5	44.6	41.7

• All dimensions in millimeters unless specified as “inch”. Dimension are for reference only, subject to change
• Any size not in the list is available upon request.

SPMBTI
Positionable Male Branch Tee

Standard

I-Lok(I-Fitting)

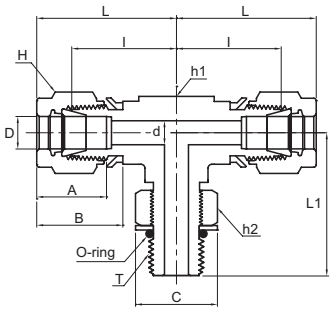

Connects Fractional Tubes To Female ISO Parallel Thread

Part No.	Tube O.D. D (inch)	T (PF)	d Min	Width Across Flat			A	B	I	L	L1	C
				h1 (inch)	h2 (inch)	H (inch)						
SPMBTI - 4 - 2G	1/4	1/8	4.06	1/2	9/16	9/16	15.24	17.78	19.56	26.92	26.42	17.27
SPMBTI - 4 - 4G	1/4	1/4	4.83	5/8	3/4	9/16	15.24	17.78	21.59	28.96	32.26	22.86
SPMBTI - 6 - 4G	3/8	1/4	5.08	5/8	3/4	11/16	15.24	19.30	23.11	30.48	32.26	22.86
SPMBTI - 8 - 6G	3/8	3/8	7.87	13/16	7/8	7/8	22.86	21.84	25.91	36.07	37.08	26.42
SPMBTI - 8 - 8G	1/2	1/2	10.41	15/16	1-1/16	7/8	22.86	21.84	27.94	38.10	43.43	32.00
SPMBTI - 12 - 8G	3/4	1/2	11.94	1-1/16	1-1/16	1-1/8	24.38	21.84	29.72	39.88	45.21	32.00
SPMBTI - 12 - 12G	3/4	3/4	15.75	1-1/16	1-3/8	1-1/8	24.38	21.84	29.72	39.88	48.77	41.15
SPMBTI - 16 - 16G	1	1	19.81	1-3/8	1-5/8	1-1/2	31.24	26.42	36.83	49.02	53.59	48.51

Connects Metric Tubes To Female ISO Parallel Thread

Part No.	Tube O.D. D	T (PF)	d Min	Width Across Flat			A	B	I	L	L1	C
				h1	h2	H						
SPMBTI - 6M - 2G	6	1/8	4.0	12.7	14.3	14	15.3	17.7	19.6	27.0	26.4	17.3
SPMBTI - 6M - 4G	6	1/4	4.8	15.8	19	14	15.3	17.7	21.6	29.0	32.3	22.9
SPMBTI - 8M - 2G	8	1/8	4.0	14.3	14.3	16	16.2	18.6	21.3	28.8	27.4	17.3
SPMBTI - 8M - 4G	8	1/4	5.9	15.8	19	16	16.2	18.6	22.4	29.9	32.2	22.9
SPMBTI - 10M - 4G	10	1/4	5.9	20.6	19	19	17.2	19.5	25.9	33.5	35.0	22.9
SPMBTI -12M - 8G	12	1/2	9.5	23.8	27	22	22.8	22.0	27.9	38.0	35.0	32.0

Connects Fractional Tubes To SAE/MS Straight Thread Boss

Part No.	Tube O.D. D (inch)	Straight Thread T(U)	d Min	Width Across Flat			A	B	I	L	L1	C
				h1 (inch)	h2 (inch)	H (inch)						
SPMBTI - 4 - 4U	1/4	7/16-20	4.83	1/2	9/16	9/16	15.24	17.78	21.08	28.45	28.45	16.51
SPMBTI - 6 - 6U	3/8	9/16-18	7.11	5/8	11/16	11/16	16.76	19.30	24.64	32.00	32.26	20.07
SPMBTI - 8 - 8U	1/2	3/4-16	10.41	13/16	7/8	7/8	22.86	21.84	27.43	37.59	37.85	25.65
SPMBTI -12 - 12U	3/4	1-1/16-12	15.75	1-1/16	1-1/4	1-1/8	24.38	21.84	31.24	41.40	48.77	36.58
SPMBTI -16 - 16U	1	1-5/16-12	22.35	1-3/8	1-1/2	1-1/2	31.24	26.42	38.35	50.55	53.59	43.94

Connects Metric Tubes To SAE/MS Straight Thread Boss

Part No.	Tube O.D. D	Straight Thread T(U)	d Min	Width Across Flat			A	B	I	L	L1	C
				h1	h2	H						
SPMBTI - 6M - 4U	6	7/16-20	4.8	12.7	14.3	14	15.2	17.7	21.1	28.4	28.5	16.5
SPMBTI - 12M - 8U	12	3/4-16	9.5	20.6	22.2	22	22.8	21.8	27.4	37.5	37.9	25.6
SPMBTI - 18M - 12U	18	1-1/16-12	15.1	27	31.7	28	24.3	21.8	31.2	41.4	48.8	36.5
SPMBTI - 25M - 16U	25	1-5/16-12	21.8	34.9	38.1	38	31.2	26.4	38.4	50.5	53.6	43.9

• All dimensions in millimeters unless specified as “inch”. Dimension are for reference only, subject to change
• Any size not in the list is available upon request.

SMRTI
Male Run Tee

Standard

I-Lok(I-Fitting)

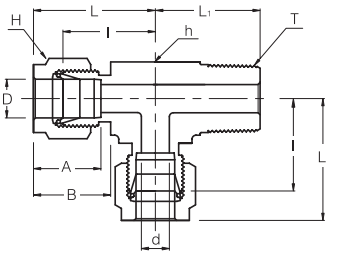

Connects Fractional Tubes To Female NPT Thread

Part No.	Tube O.D. D (inch)	T (NPT)	d Min	Width Across Flat		A	B	I	L	L1
				h (inch)	H (inch)					
SMRTI - 4 - 2N	1/4	1/8	4.82	1/2	9/16	15.24	17.78	19.55	26.92	18.79
SMRTI - 4 - 4N	1/4	1/4	4.82	1/2	9/16	15.24	17.78	19.55	26.92	23.36
SMRTI - 6 - 4N	3/8	1/4	7.11	5/8	11/16	16.76	19.30	23.11	30.48	25.40
SMRTI - 6 - 6N	3/8	3/8	7.11	5/8	11/16	16.76	19.30	23.10	30.48	28.19
SMRTI - 8 - 6N	1/2	3/8	9.65	13/16	7/8	22.86	21.84	25.90	36.06	28.19
SMRTI - 8 - 8N	1/2	1/2	10.41	13/16	7/8	22.86	21.84	25.90	36.06	33.02
SMRTI -12 - 12N	3/4	3/4	15.74	1-1/16	1-1/8	24.38	21.84	29.71	39.87	36.83

Connects Metric Tubes To Female ISO Tapered Thread

Part No.	Tube O.D. D	T (PT)	d Min	Width Across Flat		A	B	I	L	L1
				h	H					
SMRTI - 6M - 2R	6	1/8	4.8	12.7	14	15.3	17.7	19.6	27.0	18.8
SMRTI - 6M - 4R	6	1/4	4.8	12.7	14	15.3	17.7	19.6	27.0	23.4
SMRTI - 8M - 4R	8	1/4	6.4	15.9	16	16.2	18.6	22.4	29.9	25.4
SMRTI - 10M - 4R	10	1/4	7.1	17.5	19	17.2	19.5	23.9	31.5	28.2
SMRTI - 10M - 6R	10	3/8	7.9	17.5	19	17.2	19.5	23.9	31.5	28.2
SMRTI - 12M - 4R	12	1/4	7.1	20.6	22	22.8	22.0	25.9	36.0	28.2
SMRTI - 12M - 8R	12	1/2	9.5	20.6	22	22.8	22.0	25.9	36.0	33.0
SMRTI - 16M - 6R	16	3/8	9.5	25.4	25	24.4	22.0	27.9	38.0	30.2
SMRTI - 16M - 8R	16	1/2	11.9	25.4	25	24.4	22.0	27.9	38.0	35.1
SMRTI - 20M - 12R	20	3/4	15.9	31.8	32	26.0	22.0	34.5	44.6	41.7

• All dimensions in millimeters unless specified as “inch”. Dimension are for reference only, subject to change
• Any size not in the list is available upon request.

SFBTI
Female Branch Tee

Standard

I-Lok(I-Fitting)

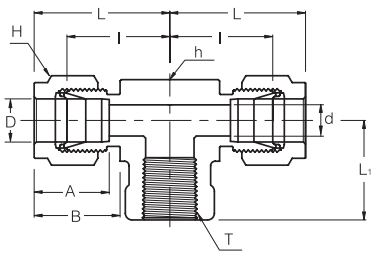

Connects Fractional Tubes To Male NPT Thread

Part No.	Tube O.D. D (inch)	T (NPT)	d Min	Width Across Flat		A	B	I	L	L1
				h (inch)	H (inch)					
SFBTI - 4 - 2N	1/4	1/8	4.82	1/2	9/16	15.24	17.78	19.55	26.92	19.05
SFBTI - 4 - 4N	1/4	1/4	4.82	11/16	9/16	15.24	17.78	22.35	29.71	22.35
SFBTI - 6 - 4N	3/8	1/4	7.11	11/16	11/16	16.76	19.30	23.87	31.24	22.35
SFBTI - 6 - 6N	3/8	3/8	7.11	13/16	11/16	16.76	19.30	25.90	33.27	22.35
SFBTI - 6 - 8N	3/8	1/2	7.11	1	11/16	16.76	19.30	28.70	36.07	28.45
SFBTI - 8 - 4N	1/2	1/4	10.41	13/16	7/8	22.86	21.84	25.90	36.06	22.35
SFBTI - 8 - 6N	1/2	3/8	10.41	13/16	7/8	22.86	21.84	25.90	36.06	22.35
SFBTI - 8 - 8N	1/2	1/2	10.41	1	7/8	22.86	21.84	28.70	38.86	28.44
SFBTI - 16 - 12N	1	3/4	22.35	1-3/8	1-1/2	31.24	26.41	36.83	49.02	31.75
SFBTI - 16 - 16N	1	1	22.35	1-11/16	1-1/2	31.24	26.41	41.40	53.59	38.10

Connects Metric Tubes To Male ISO Tapered Thread

Part No.	Tube O.D. D	T (PT)	d Min	Width Across Flat		A	B	I	L	L1
				h	H					
SFBTI - 6M - 4R	6	1/4	4.8	17.46	14	15.3	17.7	22.4	29.8	22.4
SFBTI - 6M - 6R	6	3/8	4.8	20.63	14	15.3	17.7	24.4	31.7	22.4
SFBTI - 6M - 8R	6	1/2	4.8	25.40	14	15.3	17.7	27.2	34.5	28.4
SFBTI - 8M - 2R	8	1/8	6.4	15.87	16	16.2	18.6	22.4	29.9	19.0
SFBTI - 8M - 4R	8	1/4	6.4	17.46	16	16.2	18.6	23.1	30.6	22.4
SFBTI - 8M - 6R	8	3/8	6.4	20.63	16	16.2	18.6	25.2	32.4	22.4
SFBTI - 8M - 8R	8	1/2	6.4	25.40	16	16.2	18.6	28.0	35.2	28.4
SFBTI - 10M - 4R	10	1/4	7.9	20.63	19	17.2	19.5	25.9	33.5	22.4
SFBTI - 12M - 4R	12	1/4	9.5	20.63	22	22.8	22.0	25.9	36.0	22.4
SFBTI - 12M - 6R	12	3/8	9.5	20.63	22	22.8	22.0	25.9	36.0	22.4
SFBTI - 16M - 8R	16	1/2	12.7	25.40	25	24.4	22.0	28.7	38.8	28.4

• All dimensions in millimeters unless specified as “inch”. Dimension are for reference only, subject to change
• Any size not in the list is available upon request.

SFRTI

Female Run Tee

Standard

I-Lok(I-Fitting)

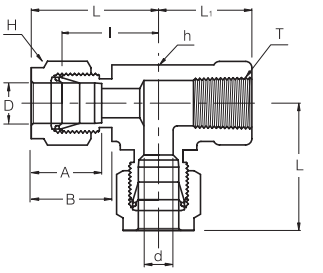

Connects Fractional Tubes To Male NPT Thread

Part No.	Tube O.D. D (inch)	T (NPT)	d Min	Width Across Flat		A	B	l	L	L1
				h (inch)	H (inch)					
SFRTI - 4 - 2N	1/4	1/8	4.82	1/2	9/16	15.24	17.78	19.55	26.92	19.05
SFRTI - 4 - 4N	1/4	1/4	4.82	11/16	9/16	15.24	17.78	22.35	29.71	22.35
SFRTI - 6 - 4N	3/8	1/4	7.11	11/16	11/16	16.76	19.30	23.87	31.24	22.35
SFRTI - 8 - 6N	1/2	3/8	10.41	13/16	7/8	22.86	21.84	25.90	36.06	22.35
SFRTI - 8 - 8N	1/2	1/2	10.41	1	7/8	22.86	21.84	28.70	39.87	28.44
SFRTI -12 - 12N	3/4	3/4	15.74	1-3/8	1-1/8	24.38	21.84	34.54	44.70	31.75
SFRTI -16 - 12N	1	3/4	22.35	1-3/8	1-1/2	31.24	26.41	36.83	49.02	31.75
SFRTI -16 - 16N	1	1	22.35	1-11/16	1-1/2	31.24	26.41	41.40	53.59	38.10

Connects Metric Tubes To Male ISO Tapered Thread

Part No.	Tube O.D. D	T (PT)	d Min	Width Across Flat		A	B	l	L	L1
				h	H					
SFRTI - 6M - 4R	6	1/4	4.8	17.4	14	15.3	17.7	22.4	29.8	22.4
SFRTI - 6M - 8R	6	1/2	4.8	25.4	14	15.3	17.7	27.2	34.5	28.4
SFRTI - 8M - 2R	8	1/8	6.4	15.8	16	16.2	18.6	22.4	29.9	19.0
SFRTI - 8M - 4R	8	1/4	6.4	17.4	16	16.2	18.6	23.1	30.6	22.4
SFRTI - 8M - 6R	8	3/8	6.4	20.6	16	16.2	18.6	25.2	32.4	22.4
SFRTI - 8M - 8R	8	1/2	6.4	25.4	16	16.2	18.6	28.0	35.2	28.4
SFRTI - 12M - 4R	12	1/4	9.5	20.6	22	22.8	22.0	25.9	33.5	22.4
SFRTI - 12M - 6R	12	3/8	9.5	20.6	22	22.8	22.0	25.9	36.0	22.4
SFRTI - 16M - 8R	16	1/2	12.7	25.4	25	24.4	22.0	29.7	39.8	28.4

• All dimensions in millimeters unless specified as “inch”. Dimension are for reference only, subject to change
• Any size not in the list is available upon request.

SUCI
Union Cross

Standard

I-Lok(I-Fitting)

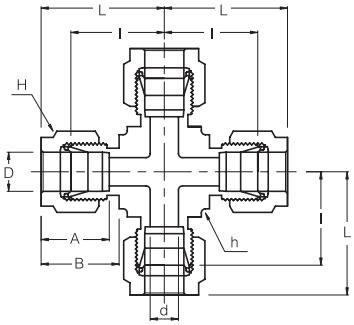

Connects Fractional Tubes

Part No.	Tube O.D. D (inch)	d Min	Width Across Flat		A	B	I	L
			h (inch)	H (inch)				
SUCI - 4	1/4	4.82	1/2	9/16	15.24	17.78	19.55	26.92
SUCI - 6	3/8	7.11	5/8	11/16	16.76	19.30	23.11	30.48
SUCI - 8	1/2	10.41	13/16	7/8	22.86	21.84	25.90	36.06
SUCI - 12	3/4	15.74	1	1-1/8	24.38	21.84	29.71	39.87
SUCI - 16	1	22.35	1-3/8	1-1/2	31.24	26.41	36.83	49.02

Connects Metric Tubes

Part No.	Tube O.D. D	d Min	Width Across Flat		A	B	I	L
			h	H				
SUCI - 6M	6	4.8	12.7	14	15.3	17.7	19.6	27.0
SUCI - 8M	8	6.4	15.9	16	16.2	18.6	22.4	29.9
SUCI - 10M	10	7.9	20.6	19	17.2	19.5	25.9	33.5
SUCI - 12M	12	9.5	20.6	22	22.8	22.0	25.9	36.0
SUCI - 16M	16	12.7	23.8	25	24.4	22.0	26.9	37.0
SUCI - 18M	18	15.1	25.4	30	24.4	22.0	28.2	38.3
SUCI - 20M	20	15.9	34.9	32	26.0	22.0	34.5	44.6
SUCI - 25M	25	21.8	34.9	38	31.3	26.5	36.8	49.1

• All dimensions in millimeters unless specified as “inch”. Dimension are for reference only, subject to change
• Any size not in the list is available upon request.

SAUI
An Union

Standard

I-Lok(I-Fitting)

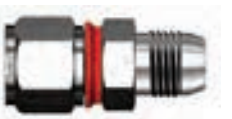

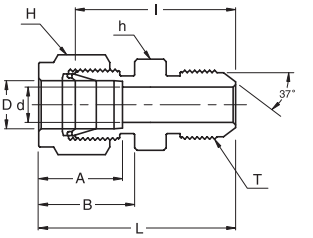

Connects Fractional Tubes To An Flared Tubes

Part No.	Tube O.D. (inch)	AN Tube Flare Size (inch)	Straight Thread T (U)	d Min	Width Across Flat		A	B	I	L
					h (inch)	H (inch)				
SAUI - 4 - 4U	1/4	1/4	7/16-20	4.31	1/2	9/16	15.24	17.78	30.22	37.59
SAUI - 6 - 4U	3/8	1/4	7/16-20	4.31	5/8	11/16	16.76	19.30	32.25	39.62
SAUI - 6 - 6U	3/8	3/8	9/16-18	7.11	5/8	11/16	16.76	19.30	32.25	39.62
SAUI - 8 - 8U	1/2	1/2	3/4-16	9.90	13/16	7/8	22.86	21.84	35.81	45.97
SAUI -12 - 12U	3/4	3/4	1-1/16-12	15.49	1-1/8	1-1/8	24.38	21.84	43.18	53.34
SAUI -16 - 16U	1	1	1-5/16-12	21.33	1-3/8	1-1/2	31.24	26.41	49.27	61.46

Connects Fractional Tubes To An Flared Tubes

Part No.	Tube O.D.	AN Tube Flare Size (inch)	Straight Thread T (U)	d Min	Width Across Flat		A	B	I	L
					h	H				
SAUI - 6M - 4U	6	1/4	7/16-20	4.8	12.7	14	15.2	17.7	30.20	37.5
SAUI - 12M - 8U	12	1/2	3/4-16	9.5	20.6	22	22.8	21.8	35.80	45.9
SAUI - 18M - 12U	18	3/4	1-1/16-12	15.1	28.6	30	24.3	21.8	43.20	53.3
SAUI - 25M - 16U	25	1	1-5/16-12	21.8	34.9	38	31.2	26.4	49.27	61.4

• All dimensions in millimeters unless specified as “inch”. Dimension are for reference only, subject to change
• Any size not in the list is available upon request.

SRI
Reducer

Standard

I-Lok(I-Fitting)

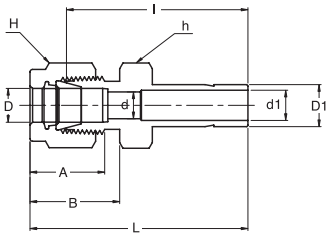

Connects Fractional Tubes To Fractional SUPERLOK Port

Part No.	Tube O.D.		d Min	d1 Min	Width Across Flat		A	B	I	L
	D (inch)	D_1 (inch)			h (inch)	H (inch)				
SRI - 4 - 2	1/4	1/8	4.83	2.1	1/2	9/16	15.24	17.78	29.46	36.83
SRI - 4 - 3	1/4	3/16	4.83	3.0	1/2	9/16	15.24	17.78	30.22	37.59
SRI - 4 - 4	1/4	1/4	4.83	4.4	1/2	9/16	15.24	17.78	31.75	39.11
SRI - 4 - 5	1/4	5/16	4.83	5.6	1/2	9/16	15.24	17.78	32.51	39.87
SRI - 4 - 6	1/4	3/8	4.83	6.9	1/2	9/16	15.24	17.78	33.27	40.64
SRI - 4 - 8	1/4	1/2	4.83	9.4	9/16	9/16	15.24	17.78	38.86	46.22
SRI - 4 - 10	1/4	5/8	4.83	12.0	11/16	9/16	15.24	17.78	40.64	48.00
SRI - 4 - 12	1/4	3/4	4.83	14.8	13/16	9/16	15.24	17.78	41.40	47.75
SRI - 6 - 4	3/8	1/4	7.11	4.4	5/8	11/16	16.76	19.30	34.03	41.40
SRI - 6 - 6	3/8	3/8	7.11	6.9	5/8	11/16	16.76	19.30	35.81	43.18
SRI - 6 - 8	3/8	1/2	7.11	9.4	5/8	11/16	16.76	19.30	41.14	48.51
SRI - 6 - 10	3/8	5/8	7.11	12.0	11/16	11/16	16.76	19.30	42.92	50.29
SRI - 6 - 12	3/8	3/4	7.11	14.8	13/16	11/16	16.76	19.30	42.92	50.29
SRI - 8 - 4	1/2	1/4	10.41	4.4	13/16	7/8	22.86	21.84	34.79	44.95
SRI - 8 - 6	1/2	3/8	10.41	6.9	13/16	7/8	22.86	21.84	36.57	46.73
SRI - 8 - 8	1/2	1/2	10.41	9.4	13/16	7/8	22.86	21.84	42.16	52.32
SRI - 8 - 10	1/2	5/8	10.41	12.0	13/16	7/8	22.86	21.84	43.68	53.84
SRI - 8 - 12	1/2	3/4	10.41	14.8	13/16	7/8	22.86	21.84	43.68	53.84
SRI - 8 - 16	1/2	1	10.41	20.4	1-1/16	7/8	22.86	21.84	50.03	60.19
SRI - 12 - 8	3/4	1/2	15.74	9.4	1-1/16	1-1/8	24.38	21.84	44.45	54.61
SRI - 12 - 16	3/4	1	15.74	20.4	1-1/16	1-1/8	24.38	21.84	52.32	62.48

Connects Metric Tubes To Metric SUPERLOK Port

Part No.	Tube O.D.		d Min	d1 Min	Width Across Flat		A	B	I	L
	D	D_1			h	H				
SRI - 6M - 8M	6	8	4.8	5.6	14	14	15.3	17.7	32.5	39.9
SR - 6M- 10M	6	10	4.8	7.1	14	14	15.3	17.7	33.3	40.7
SR - 8M - 6M	8	6	6.4	4.1	15	16	16.2	18.6	32.8	40.3
SR - 8M - 10M	8	10	6.4	7.1	15	16	16.2	18.6	34.5	42.0
SR - 10M - 6M	10	6	7.9	4.1	18	19	17.2	19.5	34.8	42.4
SR - 10M - 8M	10	8	7.9	5.6	18	19	17.2	19.5	35.8	43.4
SR - 10M - 12M	10	12	7.9	8.8	18	19	17.2	19.5	42.2	49.8
SR - 12M - 8M	12	8	9.5	5.6	22	22	22.8	22.0	35.8	45.9
SR - 12M - 10M	12	10	9.5	7.1	22	22	22.8	22.0	36.6	46.7
SR - 18M - 12M	18	12	15.1	8.8	27	30	24.4	22.0	44.5	54.6
SR - 18M - 16M	18	16	15.1	12.0	27	30	24.4	22.0	46.0	56.1
SR - 18M - 20M	18	20	15.1	15.5	27	30	24.4	22.0	47.5	57.6
SR - 25M - 18M	25	18	21.8	13.9	35	38	31.3	26.5	50.8	63.1
SR - 25M - 20M	25	20	21.8	15.5	35	38	31.3	26.5	52.3	64.6

• All dimensions in millimeters unless specified as “inch”. Dimension are for reference only, subject to change
• Any size not in the list is available upon request.

SOSCI

O-Seal Straight Thread Connector

Standard

I-Lok(I-Fitting)

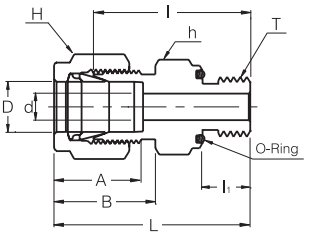

Connects Fractional Tube To Female Straight Thread

Part No.	Tube O.D. D (inch)	Straight Thread T (U)	d Min	Width Across Flat		A	B	I	I1	L	O-Ring Uniform Size Number
				h (inch)	H (inch)						
SOSCI - 4 - 4U	1/4	7/16-20	4.82	3/4	9/16	15.24	17.78	30.98	10.41	38.35	-111
SOSCI - 6 - 6U	3/8	9/16-18	7.11	15/16	11/16	16.76	19.30	35.05	11.93	42.41	-114
SOSCI - 8 - 8U	1/2	3/4-16	10.41	1-1/8	7/8	22.86	21.84	35.81	11.93	45.97	-116
SOSCI - 12 - 12U	3/4	1-1/16-12	15.75	1-1/2	1-1/8	24.38	21.84	42.16	14.22	52.32	-215
SOSCI - 16 - 16U	1	1-5/16-12	22.35	1-3/4	1-1/2	31.24	26.41	45.97	14.22	58.16	-219

Connects Metric Tube To Female Straight Thread

Part No.	Tube O.D. D	Straight Thread T (U)	d Min	Width Across Flat		A	B	I	I1	L	O-Ring Uniform Size Number
				h	H						
SOSCI - 6M - 4U	6	7/16-20	4.8	19	14	15.2	17.7	31.0	10.4	38.3	-111
SOSCI - 12M - 8U	12	3/4-16	9.5	28.6	22	22.8	21.8	35.8	11.9	45.9	-116
SOSCI - 18M - 12U	18	1-1/16-12	15.1	38.1	28	24.3	21.8	42.2	14.2	52.3	-215
SOSCI - 25M - 16U	25	1-5/16-12	21.8	44.4	38	31.2	26.4	46.0	14.2	58.1	-219

SOPCI

O-Seal Pipe Thread Connector

Standard

I-Lok(I-Fitting)

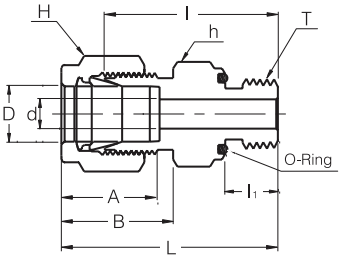

Connects Fractional Tube To Female NPT Thread

Part No.	Tube O.D. D (inch)	T* (NPT)	d Min	Width Across Flat		A	B	I	I_1	L	O-Ring Uniform Size Number
				h (inch)	H (inch)						
SOPCI - 4 - 2N	1/4	1/8	4.82	3/4	9/16	15.24	17.78	27.68	7.11	35.05	-111
SOPCI - 4 - 4N	1/4	1/4	4.82	15/16	9/16	15.24	17.78	30.98	9.65	38.35	-113
SOPCI - 6 - 4N	3/8	1/4	7.11	15/16	11/16	16.76	19.30	32.51	9.65	39.87	-113
SOPCI - 6 - 6N	3/8	3/8	7.11	1-1/8	11/16	16.76	19.30	34.03	10.41	41.40	-116
SOPCI - 6 - 8N	3/8	1/2	7.11	1-5/16	11/16	16.76	19.30	39.62	13.46	46.99	-212
SOPCI - 8 - 8N	1/2	1/2	10.41	1-5/16	7/8	22.86	21.84	39.62	13.46	49.78	-212

• All dimensions in millimeters unless specified as "inch". Dimension are for reference only, subject to change
• Any size not in the list is available upon request.

SSMCI

SAE/MS Male Connector

Standard

I-Lok(I-Fitting)

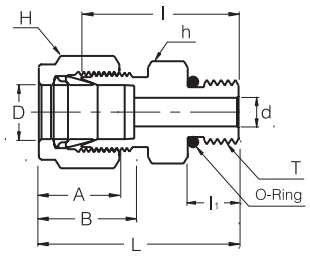

Connects Fractional Tubes To SAE/MS Straight Thread Boss

Part No.	Tube O.D. D (inch)	Straight Thread T (U)	d Min	Width Across Flat		A	B	I	I1	L	O-Ring Uniform Size Number
				h (inch)	H (inch)						
SSMCI - 4 - 4U	1/4	7/16-20	4.82	9/16	9/16	15.24	17.78	26.67	9.14	34.03	3-904
SSMCI - 4 - 6U	1/4	9/16-18	4.82	11/16	9/16	15.24	17.78	28.19	9.90	35.56	3-906
SSMCI - 4 - 8U	1/4	3/4-16	4.82	7/8	9/16	15.24	17.78	30.22	11.17	37.59	3-908
SSMCI - 4 - 10U	1/4	7/8-14	4.82	1	9/16	15.24	17.78	33.27	12.70	40.64	3-910
SSMCI - 6 - 4U	3/8	7/16-20	5.08	5/8	11/16	16.76	19.30	28.19	9.14	35.56	3-904
SSMCI - 6 - 6U	3/8	9/16-18	7.11	11/16	11/16	16.76	19.30	29.71	9.90	37.08	3-906
SSMCI - 6 - 8U	3/8	3/4-16	7.11	7/8	11/16	16.76	19.30	31.75	11.17	39.11	3-908
SSMCI - 6 - 10U	3/8	7/8-14	7.11	1	11/16	16.76	19.30	34.79	12.70	42.16	3-910
SSMCI - 8 - 6U	1/2	9/16-18	7.11	13/16	7/8	22.86	21.84	28.95	9.90	39.11	3-906
SSMCI - 8 - 8U	1/2	3/4-16	10.41	7/8	7/8	22.86	21.84	31.75	11.17	41.91	3-908
SSMCI - 8 - 10U	1/2	7/8-14	10.41	1	7/8	22.86	21.84	34.79	12.70	44.95	3-910
SSMCI - 8 - 12U	1/2	1-1/16-12	10.41	1-1/4	7/8	22.86	21.84	38.86	14.98	49.02	3-912
SSMCI - 12 - 8U	3/4	3/4-16	10.66	1-1/16	1-1/8	24.38	21.84	35.81	11.17	45.97	3-908
SSMCI - 12 - 12U	3/4	1-1/16-12	15.74	1-1/4	1-1/8	24.38	21.84	38.86	14.98	49.02	3-912
SSMCI - 16 - 12U	1	1-1/16-12	16.76	1-3/8	1-1/2	31.24	26.41	41.14	14.98	53.34	3-912
SSMCI - 16 - 16U	1	1-5/16-12	22.35	1-1/2	1-1/2	31.24	26.41	42.16	14.98	54.35	3-916

Connects Metric Tubes To SAE/MS Straight Thread Boss

Part No.	Tube O.D. D	Straight Thread T (U)	d Min	Width Across Flat		A	B	I	I1	L	O-Ring Uniform Size Number
				h	H						
SSMCI - 6M - 4U	6	7/16-20	4.8	14.3	14.3	15.2	17.7	26.7	9.1	34.0	3-904
SSMCI - 6M - 6U	6	9/16-18	4.8	17.4	14.3	15.2	17.7	28.2	9.9	35.5	3-906
SSMCI - 6M - 8U	6	3/4-16	4.8	22.2	14.3	15.2	17.7	30.2	11.2	37.5	3-908
SSMCI - 6M - 10U	6	7/8-14	4.8	25.4	14.3	15.2	17.7	33.3	12.7	40.6	3-910
SSMCI - 12M - 6U	12	9/16-18	7.1	20.6	22.2	22.8	21.8	29.0	9.9	39.1	3-906
SSMCI - 12M - 8U	12	3/4-16	9.5	22.2	22.2	22.8	21.8	31.8	11.2	41.9	3-908
SSMCI - 12M - 10U	12	7/8-14	9.5	25.4	22.2	22.8	21.8	34.8	12.7	44.9	3-910
SSMCI - 12M - 12U	12	1-1/16-12	9.5	31.7	22.2	22.8	21.8	38.9	15.0	49.0	3-912
SSMCI - 18M - 8U	18	3/4-16	10.6	27	28.6	24.3	21.8	35.8	11.2	45.9	3-908
SSMCI - 18M - 12U	18	1-1/16-12	15.1	34.9	28.6	24.3	21.8	38.9	15.0	49.0	3-912
SSMCI - 25M - 12U	25	1-1/16-12	16.7	34.9	38.1	31.2	26.4	41.1	15.0	53.3	3-912
SSMCI - 25M - 16U	25	1-5/16-12	21.8	38.1	38.1	31.2	26.4	42.2	15.0	54.3	3-916

• All dimensions in millimeters unless specified as “inch”. Dimension are for reference only, subject to change
• Any size not in the list is available upon request.

SPWCI
Male Pipe Weld Connector

Standard

I-Lok(I-Fitting)

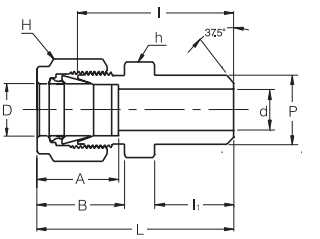

Connects Fractional Tubes To Pipe

Part No.	Tube O.D. D (inch)	Male Pipe Size(P)		d Min	Width Across Flat		A	B	I	I₁	L
		Nom.	O.D.		h (inch)	H (inch)					
SPWCI - 4 - 2P	1/4	1/8	10.30	4.82	1/2	9/16	15.24	17.78	25.40	9.65	32.76
SPWCI - 4 - 4P	1/4	1/4	13.70	4.82	9/16	9/16	15.24	17.78	30.48	14.22	37.84
SPWCI - 6 - 4P	3/8	1/4	13.70	7.11	5/8	11/16	16.76	19.30	32.51	14.22	39.87
SPWCI - 6 - 6P	3/8	3/8	17.10	7.11	11/16	11/16	16.76	19.30	32.51	14.22	39.87
SPWCI - 6 - 8P	3/8	1/2	21.30	7.11	7/8	11/16	16.76	19.30	38.86	19.05	46.22
SPWCI - 8 - 6P	1/2	3/8	17.10	10.41	13/16	7/8	22.86	21.84	33.27	14.22	43.43
SPWCI - 8 - 8P	1/2	1/2	21.30	10.41	7/8	7/8	22.86	21.84	38.86	19.05	49.02
SPWCI -12 - 12P	3/4	3/4	26.67	15.74	1-1/16	1-1/18	24.38	21.84	40.38	19.05	50.54
SPWCI -16 - 16P	1	1	33.40	22.35	1-3/8	1-1/2	31.24	26.41	50.03	23.87	62.23

Connects Metric Tubes To Pipe

Part No.	Tube O.D. D	Male Pipe Size(P)		d Min	Width Across Flat		A	B	I	I₁	L
		Nom.	O.D.		h	H					
SPWCI - 6M - 2P	6	1/8	10.3	4.8	14	14	15.3	17.7	25.4	9.7	32.8
SPWCI - 6M - 4P	6	1/4	13.7	4.8	14	14	15.3	17.7	30.5	14.2	37.9
SPWCI - 8M - 8P	8	1/2	21.3	6.4	22	16	16.2	18.6	38.1	19.0	45.6
SPWCI - 10M - 4P	10	1/4	13.7	7.1	18	19	17.2	19.5	33.3	14.2	40.9
SPWCI - 10M - 6P	10	3/8	17.1	7.9	18	19	17.2	19.5	33.3	14.2	40.9
SPWCI - 10M - 8P	10	1/2	21.3	7.9	22	19	17.2	19.5	38.9	19.0	46.5
SPWCI - 12M - 4P	12	1/4	13.7	7.1	22	22	22.8	22.0	33.3	14.2	43.4
SPWCI - 16M - 8P	16	1/2	21.3	12.7	24	25	24.4	22.0	38.9	19.0	49.0
SPWCI - 18M - 8P	18	1/2	21.3	13.5	27	30	24.4	22.0	40.4	19.0	50.5

SMPWEI
Male Pipe Weld Elbow

Standard

I-Lok(I-Fitting)

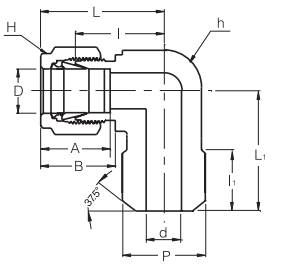

Connects Fractional Tubes To Pipe

Part No.	Tube O.D. D (inch)	Male Pipe Size(P)		d Min	Width Across Flat		A	B	I	I₁	L	L₁
		Nom.	O.D.		h (inch)	H (inch)						
SMPWEI - 4 - 4P	1/4	1/4	13.70	4.82	1/2	9/16	15.24	17.78	19.55	14.22	26.90	23.37
SMPWEI - 6 - 4P	3/8	1/4	13.70	7.11	5/8	11/16	16.76	19.30	23.11	14.22	30.48	25.40
SMPWEI - 8 - 8P	1/2	1/2	21.30	10.41	13/16	7/8	22.86	21.84	25.90	19.05	36.06	33.02

Connects Metric Tubes To Pipe

Part No.	Tube O.D. D	Male Pipe Size(P)		d Min	Width Across Flat		A	B	I	I₁	L	L₁
		Nom.	O.D.		h	H						
SMPWEI - 6M - 4P	6	1/4	13.70	4.8	12.7	14.3	15.2	17.7	19.6	14.2	26.9	23.4
SMPWEI - 12M - 8P	12	1/2	21.30	9.5	20.6	22.2	22.8	21.8	25.9	19.1	36.1	33.0

• All dimensions in millimeters unless specified as "inch". Dimension are for reference only, subject to change
• Any size not in the list is available upon request.

SSWCI
Tube Socket Weld Connector

Standard

I-Lok(I-Fitting)

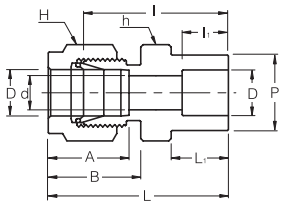

Connects Fractional Tubes

Part No.	Tube O.D. D (inch)	d Min	P	Width Across Flat		A	B	l	l_1	L	L_1
				h (inch)	H (inch)						
SSWCI - 4	1/4	4.82	11.17	1/2	9/16	15.24	17.78	26.16	7.87	33.52	10.41
SSWCI - 6	3/8	7.11	15.74	5/8	11/16	16.76	19.30	30.22	9.65	37.59	11.93
SSWCI - 8	1/2	10.41	19.05	13/16	7/8	22.86	21.84	30.98	12.70	41.14	11.93
SSWCI -12	3/4	15.74	26.67	1-1/16	1-1/8	24.38	21.84	33.27	14.22	43.43	11.93
SSWCI - 16	1	22.35	33.27	1-3/8	1-1/2	31.24	26.41	40.38	19.05	52.57	14.22

Connects Metric Tubes

Part No.	Tube O.D. D	d Min	P	Width Across Flat		A	B	l	l_1	L	L_1
				h	H						
SSWCI - 6M	6	4.8	11.17	12.7	14.3	15.2	17.7	26.2	7.9	33.5	10.4
SSWCI - 12M	12	9.5	19.05	20.6	22.2	22.8	21.8	31.0	12.7	41.1	11.9
SSWCI - 18M	18	15.1	26.67	27	28.6	24.3	21.8	33.3	14.2	43.4	11.9
SSWCI - 25M	25	21.8	33.27	34.9	38.1	31.2	26.4	40.4	19.1	52.6	14.2

SSWEI
Tube Socket Weld Elbow

Standard

I-Lok(I-Fitting)

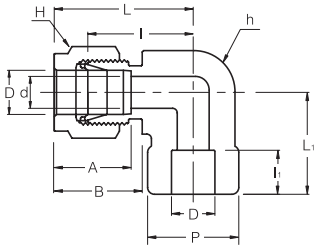

Connects Fractional Tubes

Part No.	Tube O.D. D (inch)	d Min	P	Width Across Flat		A	B	l	l_1	L	L_1
				h (inch)	H (inch)						
SSWEI - 4	1/4	4.82	12.70	1/2	9/16	15.24	17.78	19.55	7.87	26.92	19.55
SSWEI - 6	3/8	7.11	15.75	5/8	11/16	16.76	19.30	23.11	9.65	30.48	23.11
SSWEI - 8	1/2	10.41	20.57	13/16	7/8	22.86	21.84	25.90	12.70	36.06	25.90
SSWEI - 12	3/4	15.74	26.92	1-1/16	1-1/8	24.38	21.84	29.71	14.22	39.87	29.71
SSWEI - 16	1	22.35	35.05	1-3/8	1-1/2	31.24	26.41	36.83	19.05	49.02	36.83

Connects Metric Tubes

Part No.	Tube O.D. D	d Min	P	Width Across Flat		A	B	l	l_1	L	L_1
				h	H						
SSWEI - 6M	6	4.8	12.70	12.7	14.3	15.2	17.7	19.6	7.9	26.9	19.6
SSWEI - 12M	12	9.5	20.57	20.6	22.2	22.8	21.8	25.9	12.7	36.1	25.9
SSWEI -18M	18	15.1	26.92	27	28.6	24.3	21.8	29.7	14.2	39.9	29.7
SSWEI - 25M	25	21.8	35.05	34.9	38.1	31.2	26.4	36.8	19.1	49.0	36.8

• All dimensions in millimeters unless specified as “inch”. Dimension are for reference only, subject to change
• Any size not in the list is available upon request.

i–Lok *(i-Fitting)*

www.sks-online.com

SUPERLOK®

Bite Type Tube Fittings (DIN2353)

www.superlok.com

INDEX

Introduction

SUPERLOK DIN Type Tube Fitting

The SUPERLOK DIN type fitting is a flareless metric fitting that consists of a body, a compression ring (ferrule) and a nut, On assembly, two cutting edges of the compression ring “bite” into the outer surface of the tube ensuring the necessary holding power for high pressure.
Available in three series, the The SUPERLOK DIN type fittings and accessories are manufactured in accordance with DIN2353.
The fittings and components listed in this catalog are intended solely for the assembly of connections for fluid applications.

Design and Construction

The three components of SUPERLOK DIN Type Tube Fittings are designed and manufactured to produced a strong, reliable, leak-free joint upon proper assembly.

The SUPERLOK DIN Type Body :

SUPERLOK DIN Type fitting bodies are available in over thirty configurations. The shaped products (i. e., elbows, tees, crosses) are forged, then machined to the stringent SUPERLOK fitting specifications.
The forging process used by “ BMT ” further improves the strength and mechanical properties of the fitting material. Straight products are made from cold drawm bar stock. The cold drawning operation ensures consistently tight dimensional tolerances, as well as significantly improved strength.

The SUPERLOK DIN Type compression Ring :

SUPERLOK compression rings are precision machined with all dimensions and surfaces, particularly the critical bite edges, monitored on an ongoing basis, The rings are then heat treated in a manner that provides the hardness, strength, and toughness necessary to satisfy the demanding service conditions that exist in industry today.

The SUPERLOK DIN Type Nut :

SUPERLOK fitting nuts are either cold formed, machined from cold drawn material. The cold forming and cold drawing operations provide a more tightly packed grain structure, thus improving the material’s strength, in addition, cold forming significantly improves the fatigue properties or endurance limits of the nuts.

Function of DIN Type Tube Fittings

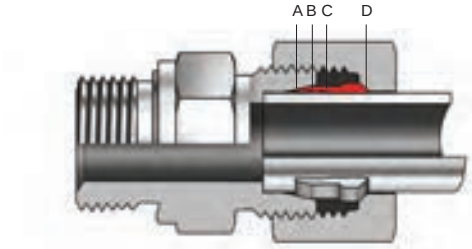

Before Tightening the nut

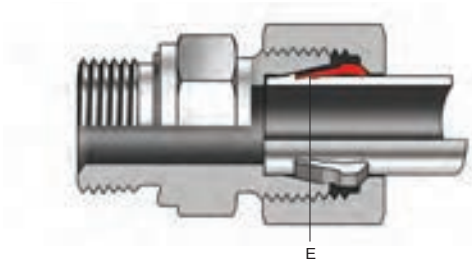

After Tigthning the nut

The SUPERLOK DIN Type fitting produces a low to high pressure, leak free connection of tubes and components in fluid systems. The basic function of the compression Ring is the controlled compression bite of the ring into the tube due to a unique internal geometry.

The front cutting edge (A) has already started cutting into the tube before the second cutting edge (B) starts. As soon as both cutting edges have cut the tube to the designed depth further advance is limited by the stop edge (C).

Owing to the design of both cutting edges and stop edge all forces arising are equally distributed. This distribution along with the specially designed interior collar (D) of the ring gurantees increased safety, particularly with regard to vibration and flexure stresses. The design and function of the compression ring ensure that service vibration loading is not present in the areas of the tubing where the bite is made.

The stop edge causes a sharp increase in tightening forces which is clearly perceptible. After assembly, a visible collar (E) of cut tube material must completely fill the space in front of the first cutting edge. With stainless steel tube and hose connection made from free cutting steel, the collar is less due to the harder material.

During assembly, it is absolutely essential that the tube is held firmly against the stop in the inner cone of the fitting; if not, the cutting process will not take place satisfactorily. Reassembly can be performed an unlimited number of times

Standard Material Specifications

Material specification

Fitting Materials	Carbon Steel	Materials according to DIN 3859
	Brass	Materials according to DIN 17660 / DIN 17672
	Stainless Steel	Materials according to DIN 17440 (Material No. : 1.4571 & 1.4401)

Pressure and Temperature Load Capability

Working pressure

Series	Pressure Ratings			
	Steel (DIN3859)		SS316 (DIN 17440)	
	Size	Pressure (bar)	Size	Pressure (bar)
LL (Very light)	4 - 8	100	4 - 8	100
L (Light)	6 - 18	315	6 - 15	250
	-	-	18 - 22	160
	22 - 42	160	28 - 42	100
S (Heavy)	6 - 14	630	6 - 14	630
	16 - 30	400	16 - 25	400
	38	315	30 - 38	315

* Working pressure - The nominal pressure (PN) as referred to in DIN2401, part 1 draft

Permissible operating temperature range

- For fitting materials

Material of Fittings	Temperature Ratings
316 Stainless steel	- 60℃ up to + 400℃ (DIN17440)
Carbon Steel	- 40℃ up to + 120℃ (DIN 3859)
Brass	- 60℃ up to + 175℃

* The specification in the pressure reductions section are to be observed here.

- For sealing materials

Seal Material	Temperature Ratings
NBR	- 35℃ up to + 100℃
FPM	- 25℃ up to + 200℃
PTFE	- 60℃ up to + 240℃

* ED - Ring and O - Ring of NBR Standard

CAUTION

When combining the different fitting and sealing materials the lowest temperature limit in each case is applicable

Pressure Reductions

Recommended pressure reductions (determined by the fuid medium) for higher service temperature

Material of Fittings	Temperature Rating	Reduction of Pressure
316 Stainless steel	- 60℃ up to + 20℃	-
	+ 50℃	4%
	+ 100℃	11%
	+ 200℃	20%
	+ 300℃	29%
	+ 400℃	33%
Carbon steel	- 40℃ up to + 120℃	-
Brass	- 60℃ up to + 175℃	30%

* For different material of tubes and fitting.
The tubes must be tested separately concerning the allowed temperature range and the necessary reduction of pressure.

Gaskets

The gaskets used on valves and fittings are normally manufactured in NBR. All have a working temperature of -35° to +135° C with a hardness of 85 ± 5 shores. For higher temperatures Viton seals are suggested with working temperatures between -25° to 200° C with a hardness of 80 ± 5 shores. All the items that are assembled with gaskets or seals of any kind must be handled according to the Din 7716 norm. (requisites for the stocking of rubber product)

Seal on thread ends

To obtain the maximum performance, the taper male thread is to be matched with the taper female thread. The cylindrical male thread is to be matched with the cylindrical female thread. It is possible to match a taper male thread with a cylindrical female thread, but this combination is technically valid only in pipings where medium / low performances are required and is never to be used where high pressures are applied.
In case of matching of a cylindrical thread with relatively soft material, it is advisable to use plain gasket type of seal.

Tubing guide

Allowed Carbon Steel Tubes on All Series

- For steel tubes in mild carbon steel we advise to use calibrated seamless cold drawn without welding tubes ST 37.4 as per DIN 1630.
- Maximum allowed hardness on the outside diameter of the tube is 75 HRB.
- The indicated pressure are to be intended at a constant pressure rate and with temperatures between -20°and +120°.

Tube O.D (mm)	Tolerance (mm)	Wall Thickness (mm)	Tube I.D (mm)	Design Pressure(bar) DIN2413 I Static	Design Pressure(bar) DIN2413 III Dynamic	Weight (kg/m)
4	0.1	0.5	0.5	313	274	0.047
		0.75	0.75	4.9	391	0.060
		1.0	1.0	522	502	0.074
5	0.1	1.0	3	432	416	0.099
6	0.1	* 0.75	4.5	333	289	0.103
		1.0	4	389	372	0.123
		1.5	3	549	526	0.166
		2.0	2	692	662	0.197
		2.25	5	757	725	0.208
8	0.1	1.0	6	333	288	0.173
		1.5	5	431	412	0.240
		2.0	4	549	526	0.296
		2.5	3	658	630	0.339
10	0.1	1.0	8	235	209	0.271
		1.5	7	373	357	0.314
		2.0	6	478	458	0.395
		2.5	5	576	551	0.462
		3.0	4	666	638	0.518
12	0.08	1.0	10	235	209	0.271
		1.5	9	353	303	0.389
		2.0	8	409	391	0.493
		2.5	7	495	474	0.586
		3.0	6	576	551	0.606
		3.5	5	651	624	0.734
14	0.08	* 1	12	201	182	0.321
		1.5	11	302	625	0.462
		2.0	10	403	343	0.592
		2.5	9	434	417	0.709
		3.0	8	507	487	0.814
		3.5	7	576	553	0.906
		4	6	576	553	0.986
15	0.08	* 1.0	13	188	171	0.345
		1.5	12	282	248	0.499
		2.0	11	336	321	0.641
		2.5	10	409	391	0.771
		3.0	9	478	458	0.888
16	0.08	* 1.0	14	176	160	0.370
		1.5	13	264	234	0.536
		2.0	12	353	303	0.691
		2.5	11	386	370	0.832
		3.0	10	452	433	0.962
18	0.08	* 1.0	16	157	143	0.419
		1.5	15	235	209	0.610
		2.0	14	313	273	0.789
		2.5	13	348	333	0.956
		3.0	12	409	391	1.110
20	0.08	* 1.5	17	212	191	0.684
		2.0	16	282	249	0.888
		2.5	15	353	303	1.080
		3.0	14	373	357	1.260
		3.5	13	426	408	1.424
		4.0	12	478	458	1.578
22	0.08	1.5	19	192	174	0.758
		2.0	18	256	227	0.986
		2.5	17	320	278	1.202
		3.0	16	343	328	1.406
25	0.08	2.0	21	226	201	1.134
		2.5	20	282	248	1.387
		3.0	19	338	292	1.628
		4.0	17	394	378	2.072
		4.5	16	437	418	2.275
		5.0	15	478	458	2.466
28	0.08	1.5	25	151	139	0.980
		2.0	24	201	181	1.282
		2.5	23	252	223	1.572
		3.0	22	302	264	1.850
		4.0	20	357	342	2.368
		5.0	18	434	415	2.836
30	0.08	* 2.0	26	188	171	1.381
		2.5	25	235	210	1.695
		3.0	24	282	248	2.000
		4.0	22	336	321	2.570
		5.0	20	409	391	3.080
35	0.15	2.0	31	161	147	1.630
		2.5	30	201	181	2.000
		3.0	29	242	215	2.370
		4.0	27	322	280	3.060
		5.0	25	357	342	3.690
		6.0	23	419	401	4.290
38	0.15	* 2.5	33	186	168	2.189
		3.0	32	223	200	2.589
		4.0	30	297	260	3.350
		5.0	28	332	318	4.075
		6.0	26	390	373	4.740
		7.0	24	446	427	5.350
42	0.2	* 2.0	28	134	124	1.973
		3.0	26	203	181	2.890
		4.0	34	269	237	3.750

* Tube which need a support sleeve for assembly in SUPERLOK DIN Type Tube Fittings.

Tubing Guide

Allowed Stainless Steel Tubes on All Series

- For steel tubes in stainless steel we advise to use calibrated seamless cold drawn without welding tubes 1.4571 as per DIN 17458 or ASTM A269.
- Maximum allowed hardness on the outside diameter of the tube is 85 HRB.
- The indicated pressure are to be intended a constant pressure rate and with temperatures between -60° and +200°.

Tube O.D (mm)	Tolerance (mm)	Wall Thickness (t mm)	Weight (kg/m)	Design Pressure DIN 2413-1 (bar)
4	±0.1	0.5	0.048	326
		1.0	0.076	544
6	±0.1	1.0	0.125	406
		1.5	0.169	572
		2.0	0.200	721
8	±0.1	1.0	0.225	347
		1.5	0.244	449
		2.0	0.301	572
		2.5	0.344	686
10	±0.1	1.0	0.225	294
		1.5	0.319	389
		2.0	0.401	498
		2.5	0.469	601
		3.0	0.526	694
12	±0.08	* 1.0	0.275	245
		1.5	0.394	368
		2.0	0.500	426
		2.5	0.595	516
		3.0	0.676	601
		3.5	0.745	679
14	±0.08	1.5	0.469	315
		2.0	0.601	420
		2.5	0.720	452
		3.0	0.826	529
		3.5	0.920	601
15	±0.08	1.5	0.507	294
		2.0	0.651	392
		3.0	0.902	498
16	±0.08	* 1.5	0.544	275
		2.0	0.702	368
		2.5	0.845	402
		3.0	0.977	471
18	±0.08	* 1.5	0.619	245

Tube O.D (mm)	Tolerance (mm)	Wall Thickness (t mm)	Weight (kg/m)	Design Pressure DIN 2413-1 (bar)
18	±0.08	2.0	0.801	326
		2.5	0.971	409
		3.0	1.128	426
20	±0.08	** 2.0	0.902	294
		2.5	1.095	368
		3.0	1.277	389
		3.5	1.446	444
		4.0	1.602	498
22	±0.08	* 2.0	1.001	267
		2.5	1.220	334
		3.0	1.427	401
25	±0.08	* 2.0	1.151	236
		2.5	1.408	294
		3.0	1.653	352
		4.0	2.104	411
		4.5	2.310	456
28	±0.08	* 2.0	1.301	210
		2.5	1.596	263
		3.0	1.878	315
30	±0.08	* 2.0	1.402	175
		2.5	1.721	245
		3.0	2.028	294
		4.0	2.604	392
35	±0.15	* 2.0	2.222	168
		2.5	2.034	210
		3.0	2.403	252
		4.0	3.104	336
38	±0.15	* 3.0	2.628	232
		4.0	3.405	310
		5.0	4.131	387
42	±0.2	3.0	2.929	210
		4.0	3.806	280

* Tube which need a support sleeve for assembly in SUPERLOK DIN Type Tube Fittings.

** Tubes to be used for ISO 8434-2 / SAE J514 norm only.

Stud Ends & Tapered Hold Forms for Tube Fittings

Form of Stud Ends

Form A (DIN3852 Part 1&2) with sealing by washer

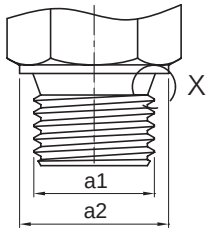

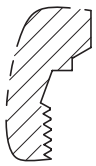

Detail X

Form B (DIN 3852 Part 1&2) with sealing by compression against face of body.

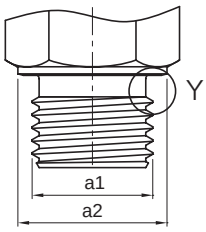

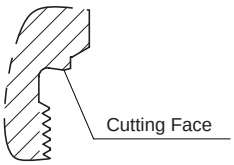

Detail Y

Form E (DIN 3852 Part 11) with sealing by DIN 3869 ring seals (*ED-Ring)

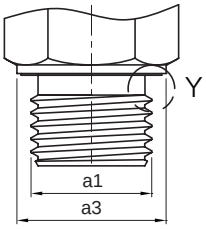

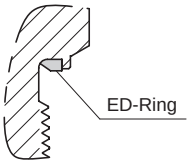

Detail Y

Form F (DIN 3852 Part 3) with sealing by *O-Ring

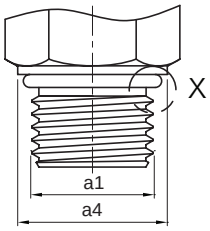

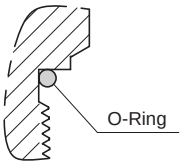

Detail X

* ED-Ring & O-Ring Seals made of NBR Standard (-20℃ to 100℃)
Other Sealing Materials are available on Request.

Form C (DIN 3852 Part 1&2) with sealing in tapered thread

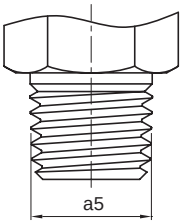

Metric (keg) DIN 158
B.S.P (keg) DIN 2999
NPT (keg) ANSI/ASME B1.20.1-1983

Thread size for Form A, B, E, F Stud Ends			
a1	a2	a3 $^{0}_{-0.2}$	a4 ±0.1
M8 x 1.0	-	-	10.9
M10 x 1.0	14.0	13.9	12.9
M12 x 1.5	17.0	16.9	16.9
M14 x 1.5	19.0	18.9	18.9
M16 x 1.5	21.0	21.9	20.9
M18 x 1.5	23.0	23.9	22.9
M20 x 1.5	25.0	25.9	24.9
M22 x 1.5	27.0	26.9	26.9
M26 x 1.5	31.0	31.9	30.9
M27 x 2.0	32.0	31.9	31.9
M33 x 2.0	39.0	39.9	37.9
M42 x 2.0	49.0	49.9	47.9
M48 x 2.0	55.0	54.9	54.9
G 1/8	14.0	13.9	-
G 1/4	18.0	18.9	-
G 3/8	22.0	21.9	-
G 1/2	26.0	26.9	-
G 3/4	32.0	31.9	-
G 1	39.0	39.9	-
G 1 1/4	49.0	49.9	-
G 1 1/2	55.0	54.9	-
7/16-20UNF	-	-	14.4
9/16-18UNF	-	-	17.6
3/4-16UNF	-	-	22.3
7/8-14UNF	-	-	25.5
1 1/16-12UN	-	-	31.9
1 5/16-12UN	-	-	38.2
1 5/8-12UN	-	-	47.4

hread size for Form C Stud Ends		
a5		
M8 x 1.0 keg.	1/8 NPT	R 1/8 keg.
M10 x 1.0 keg.	1/4 NPT	R 1/4 keg.
M12 x 1.5keg.	3/8 NPT	R 3/8 keg.
M14 x 1.5 keg.	1/2 NPT	R 1/2 keg.
M16 x 1.5 keg.	3/4 NPT	R 3/4 keg
M18 x 1.5 keg.	1 NPT	R 1 keg.
M20 x 1.5 keg.	1 1/4 NPT	R 1 1/4 keg.
M22 x 1.5 keg.	1 1/2 NPT	R 1 1/2 keg.

Stud Ends & Tapered Hold Forms for Tube Fitting

From of Tapped Holes

Form X (DIN 3852 Part 1&2)
for parallel Stud Ends. (from A,B)
*** a7 is Stud Ends Form E**

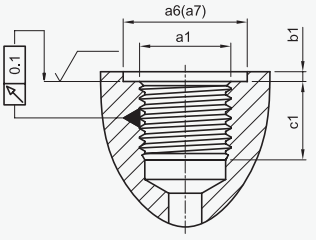

Form W (DIN 3852 Part 3)
for Stud Ends with O-Ring. (Form F)

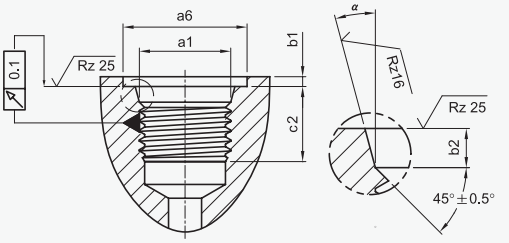

Form Z (DIN 3852 Part 1&2)
for tapered thread Stud Ends.

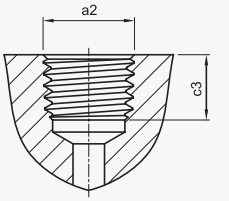

Thread size for		a6	a7	b1	a2 $^{+0.4}_{0}$	C1	C1	C3	$\alpha^{\circ}_{\pm 0.1^{\circ}}$
Form X,W Tapped Holes a1	Form Z Tapped Holes a2	min.		max.		min.	min.	min.	
M8 x 1.0	M8 x 1.0 keg.	13.0	-	1.0	1.6	-	10.0	5.5	12.0
M10 x 1.0	M10 x 1.0 keg.	15.0	15.0	1.0	1.6	8.0	10.0	5.5	12.0
M12 x 1.5	M12 x 1.5 keg.	18.0	18.0	1.5	2.4	12.0	11.5	8.5	12.0
M14 x 1.5	M14 x 1.5 keg.	20.0	20.0	1.5	2.4	12.0	11.5	8.5	15.0
M16 x 1.5	M16 x 1.5 keg.	22.0	23.0	1.5	2.4	12.0	13.0	8.5	15.0
M18 x 1.5	M18 x 1.5 keg.	24.0	25.0	2.0	2.4	12.0	14.5	8.5	15.0
M20 x 1.5	M20 x 1.5 keg.	26.0	27.0	2.0	2.4	14.0	15.0	10.5	15.0
M22 x 1.5	M22 x 1.5 keg.	28.0	28.0	2.5	2.4	14.0	15.5	10.5	15.0
M26 x 1.5	-	32.0	33.0	2.5	3.1	16.0	16.0	-	15.0
M27 x 2.0	-	33.0	33.0	2.5	3.1	16.0	19.0	-	15.0
M33 x 2.0	-	40.0	41.0	2.5	3.1	18.0	19.0	-	15.0
M42 x 2.0	-	50.0	51.0	2.5	3.1	20.0	19.5	-	15.0
M48 x 2.0	-	56.0	56.0	2.5	3.1	22.0	22.0	-	15.0
G 1/8	1/8 NPT	15.0	15.0	1.0	-	8.0	-	6.9	-
G 1/4	1/4 NPT	19.0	20.0	1.5	-	12.0	-	10.0	-
G 3/8	3/8 NPT	23.0	23.0	2.0	-	12.0	-	10.3	-
G 1/2	1/2 NPT	27.0	28.0	2.5	-	14.0	-	13.6	-
G 3/4	3/4 NPT	33.0	33.0	2.5	-	16.0	-	14.1	-
G 1	1 NPT	40.0	41.0	2.5	-	18.0	-	16.8	-
G 1 1/4	1 1/4 NPT	50.0	51.0	2.5	-	20.0	-	17.3	-
G 1 1/2	1 1/2 NPT	56.0	56.0	2.5	-	22.0	-	17.3	-
7/16-20UNF	R 1/8 keg.	21.0	-	1.6	2.4	-	11.5	5.5	12.0
9/16-18UNF	R 1/4 keg.	25.0	-	1.6	2.5	-	12.7	8.5	12.0
3/4-16UNF	R 3/8 keg.	30.0	-	2.4	2.5	-	14.3	8.5	15.0
7/8-14UNF	R 1/2 keg.	34.0	-	2.4	2.5	-	16.7	10.5	15.0
1 1/16-12UN	R 3/4 keg.	41.0	-	2.4	3.3	-	19.0	13.0	15.0
1 5/16-12UN	R 1keg.	49.0	-	3.2	3.3	-	19.0	16.0	15.0
1 5/8-12UN	R 1 1/4 keg.	58.0	-	3.2	3.3	-	19.0	17.0	15.0
	R 1 1/2 keg.	-	-	-	-	-	-	17.0	-

Assembly in Fitting Body

The use of pre-assembly bodies or pre-assembly tools are strongly recommended for all assemblies. Stainless steel tube and fittings as well as standpipe hose ends must be pre-assembled in a pre-assembly tool.

A) Preparing the tube

1 Maximum height H for straight tube end

Minimum length L for short piece of tube

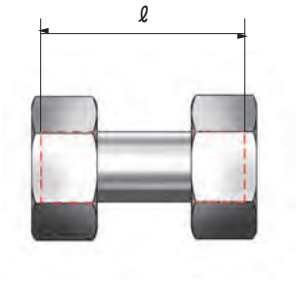

The portion of straight tube H must not deviate from roundness and straightness to the extent that the tube tolerances in DIN 2391 are exceeded.

Series	LL				L										S									
tube o.d	4	5	6	8	6	8	10	12	15	18	22	28	35	42	6	8	10	12	14	16	20	25	30	38
H min	24	25	25	26	31	31	33	33	36	38	41	41	48	48	35	35	37	37	43	43	50	54	58	65
ℓ min	30	32	32	33	39	39	42	42	45	48	53	53	60	60	44	44	47	47	54	54	63	68	73	82

2

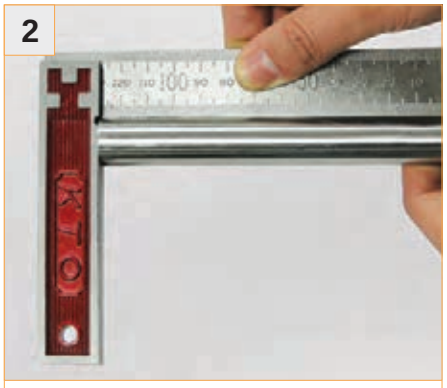

Saw off tube square
1/2° angle tolerance to the tube axis.

3 **Attention** : Do not use tube cutter!

a) tube cut with tube cutter : heavy burr / bevel cut

b) sawed off tube: very little burr

4

Lightly deburr inside and outside edge. Level up 0.3mm x 45 ° (0.012" x 45°) permissible.

B) Preparing fittings parts with lubricants

5

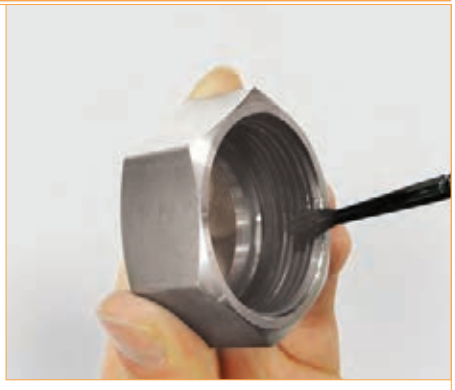

Lubricate thread and cone of fitting body, also compression ring and thread of nut.

Assembly in Fitting Body

C) Components

6

Slip nut and compression ring over tube end.

7

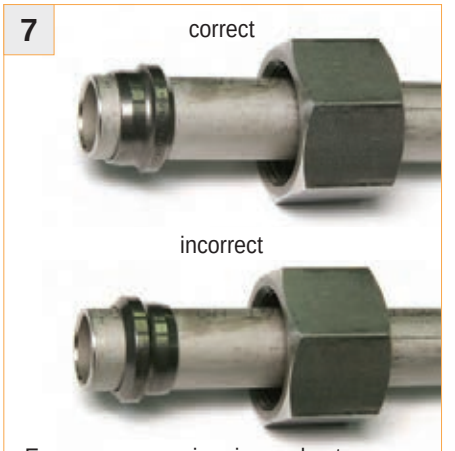

Ensure compression ring and nut are facing the right way.

D) Assembly

8

Screw nut manually on to fitting body until fingertight. Hold tube against the shoulder in the cone of fitting body.

9

To measure the prescribed turns of the nut, mark nut and tube.

10

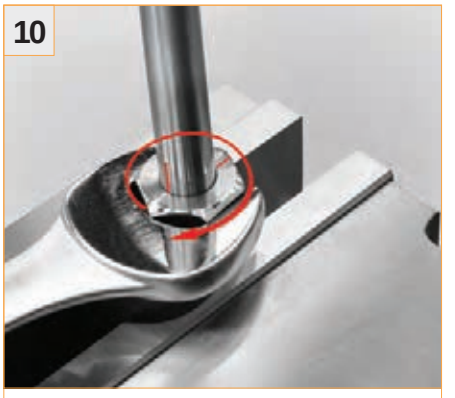

Tighten nut 1-1/2 turns (Tube must not turn with nut). Stop edgs limits over tightening by increasing tightening torque.

E) Check

11

Loosen nut. Remove tube from fitting and check if a visible collar fills space in front of 1st cutting edge completely. If not, tighten slightly more. If dose not matter if ring can be roated on tube end.

F) Final assembly

12

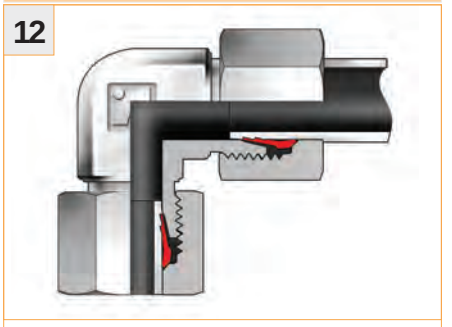

Final assembly of all pre-assembled fittings (DSE, DSBT, DSRT, DSRA) made in the appropriate body (well lubricated) with at least 1/4 turn of the nut beyond the point of a clearly perceptible resistance.

G) Repeated assembly

13

On remaking joints, nut to be tightened without increased effort. Fitting body to be held tight.

* After dismantling the tube ends for inspection they should be refitted into the same inner cone of the fitting body in which assembly was carried out.

WARNING

We warn against using sealing heads, form A, DIN 3868.
We recommend the use of swivel nuts, from B in conformance with DIN 3865.

Ordering Information

Example 1	Male Connector

D	CM	-	10	L	-	02G	ED	-	SS
1	2		3	4		5	6		7

Example 2	Reducing Union Tee

D	RUT	-	10	L	-	10	L	-	08	L	-	B
1	2		3	4		3	4		3	4		7
			* Port1			* Port2			* Port3			

In tees and crosses shown below port2 is referred to as run and port3, port4 is referred to as branch

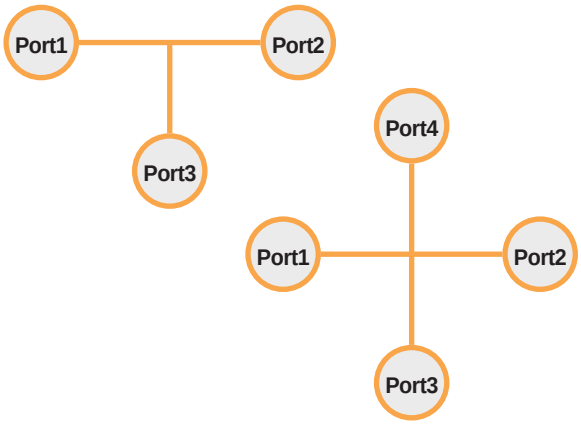

1. SUPERLOK Bite Type Tube Fitting

2. Name of Fitting :Refer to Index

3. Tube O.D

Tube O.D	4mm	6mm	8mm	10mm	12mm	15mm	16mm	18mm	20mm	22mm	25mm	28mm	30mm	35mm	38mm	42mm
Identify	4	6	8	10	12	15	16	18	20	22	25	28	30	35	38	42

4. Series

Series	Very Light	Light	Heavy
Identify	LL	L	S

5. Thread Size : See Thread Specification

6. Elastiomer : ED-Ring & O - Ring seal (Refer to Seal Material)

7. Fitting Material

Carbon Steel (DIN3859)	316 Stainless Steel (DIN17440/1.4571)	Brass
C	SS	B

Thread Specifications

Pipe Thread

Thread Type	Thread Size									Specification
	1/8"	1/4"	3/8"	1/2"	3/4"	1"	1 1/4"	1 1/2"	2"	
NPT	01N	02N	03N	04N	06N	08N	10N	12N	16N	ANSI/ASME B1.20.1
ISO/BSP Parallel	01G	02G	03G	04G	06G	08G	10G	12G	16G	ISO228 (DIN259)
ISO/BSP Tapered	01R	02R	03R	04R	06R	08R	10R	12R	16R	DIN - 2999

Metric Thread

Thread Type	Thread Size									Specification
	M8 x 1.0	M10 x 1.0	M12x 1.5	M14 x 1.5	M16 x 1.5	M18 x 1.5	.....	M42 x 2.0	M48 x 2.0	
Metric Parallel	M8	M10	M12	M14	M16	M18	.....	M42	M48	DIN - 13
Metric Tapered(Keg)	M8K	M10K	M12K	M14K	M16K	M18K	.....	M42K	M48K	DIN - 158

Unified Thread

Specification	Thread Size						
	7/16-20UNF	9/16-18UNF	3/4-16UNF	7/8-14UNF	1 1/16-12UN	1 5/16-12UN	1 5/8-12UN
ASME B1.1	4U	6U	8U	10U	12U	16U	20U

DUS

Union

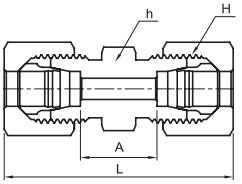

Series	Part Number	Tube O.D.	Dimension			
			H	h	L	A
LL Very Light PN 100	DUS-04LL	4	10.0	9.0	31.0	12.0
	DUS-06LL	6	12.0	11.0	32.0	9.0
	DUS-08LL	8	14.0	12.0	35.0	12.0
	DUS-10LL	10	17.0	14.0	35.0	12.0
	DUS-12LL	12	19.0	17.0	35.0	11.0
L Light PN 315	DUS-06L	6	14.0	12.0	39.0	10.0
	DUS-08L	8	17.0	14.0	40.0	11.0
	DUS-10L	10	19.0	17.0	42.0	13.0
	DUS-12L	12	22.0	19.0	43.0	14.0
	DUS-15L	15	27.0	24.0	46.0	16.0
	DUS-18L	18	32.0	27.0	48.0	16.0
PN 160	DUS-22L	22	36.0	32.0	52.0	20.0
	DUS-28L	28	41.0	41.0	54.0	21.0
	DUS-35L	35	50.0	46.0	63.0	20.0
	DUS-42L	42	60.0	55.0	66.0	21.0
S Heavy PN 630	DUS-06S	6	17.0	14.0	45.0	16.0
	DUS-08S	8	19.0	17.0	47.0	18.0
	DUS-10S	10	22.0	19.0	49.0	17.0
	DUS-12S	12	24.0	22.0	51.0	19.0
	DUS-14S	14	27.0	24.0	57.0	22.0
PN 400	DUS-16S	16	30.0	27.0	57.0	21.0
	DUS-20S	20	36.0	32.0	66.0	23.0
	DUS-25S	25	46.0	41.0	74.0	26.0
	DUS-30S	30	50.0	46.0	80.0	27.0
PN 315	DUS-38S	38	60.0	55.0	90.0	29.0

• All dimensions in millimeters unless specified as “inch”. Dimension are for reference only, subject to change
• Dimensions given approximate length with tightened nut.

DUE

Union Elbow

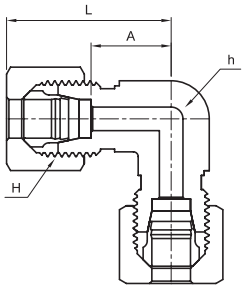

Series	Part Number	Tube O.D.	Dimension			
			H	h	L	A
LL Very Light PN 100	DUE-04LL	4	10.0	9.0	21.0	11.0
	DUE-06LL	6	12.0	9.0	21.0	9.5
	DUE-08LL	8	14.0	12.0	23.0	11.5
	DUE-10LL	10	17.0	14.0	24.0	12.5
	DUE-12LL	12	19.0	17.0	25.0	13.0
L Light PN 315	DUE-06L	6	14.0	12.0	27.0	12.0
	DUE-08L	8	17.0	12.0	29.0	14.0
	DUE-10L	10	19.0	14.0	30.0	15.0
	DUE-12L	12	22.0	17.0	32.0	17.0
	DUE-15L	15	27.0	19.0	36.0	21.0
	DUE-18L	18	32.0	24.0	40.0	23.5
PN 160	DUE-22L	22	36.0	27.0	44.0	27.5
	DUE-28L	28	41.0	36.0	47.0	30.5
	DUE-35L	35	50.0	41.0	56.0	34.5
	DUE-42L	42	60.0	50.0	63.0	40.0
S Heavy PN 630	DUE-06S	6	17.0	12.0	31.0	16.0
	DUE-08S	8	19.0	14.0	32.0	17.0
	DUE-10S	10	22.0	17.0	34.0	17.5
	DUE-12S	12	24.0	17.0	38.0	21.5
	DUE-14S	14	27.0	19.0	40.0	22.0
PN 400	DUE-16S	16	30.0	24.0	43.0	24.5
	DUE-20S	20	36.0	27.0	48.0	26.5
	DUE-25S	25	46.0	36.0	54.0	30.0
	DUE-30S	30	50.0	41.0	62.0	35.5
PN 315	DUE-38S	38	60.0	50.0	72.0	41.0

• All dimensions in millimeters unless specified as “inch”. Dimension are for reference only, subject to change
• Dimensions given approximate length with tightened nut.

DRU

Reducing Union

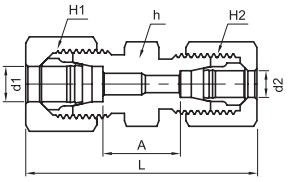

Series	Part Number	Tube O.D.		Dimension				
		d1	d2	H1	H2	h	L	A
L Light PN 315	DRU-08L-06L	8	6	17.0	14.0	14.0	40.0	11.0
	DRU-10L-06L	10	6	19.0	14.0	17.0	41.0	12.0
	DRU-10L-08L	10	8	19.0	17.0	17.0	41.0	12.0
	DRU-12L-06L	12	6	22.0	14.0	19.0	42.0	13.0
	DRU-12L-08L	12	8	22.0	17.0	19.0	42.0	13.0
	DRU-12L-10L	12	10	22.0	19.0	19.0	43.0	14.0
	DRU-15L-10L	15	10	27.0	19.0	24.0	45.0	15.0
	DRU-15L-12L	15	12	27.0	22.0	24.0	45.0	15.0
	DRU-18L-10L	18	10	32.0	19.0	27.0	46.0	15.5
	DRU-18L-12L	18	12	32.0	22.0	27.0	46.0	15.5
	DRU-18L-15L	18	15	32.0	27.0	27.0	48.0	16.5
PN 160	DRU-22L-12L	22	12	36.0	22.0	32.0	48.0	17.5
	DRU-22L-15L	22	15	36.0	27.0	32.0	50.0	18.5
	DRU-22L-18L	22	18	36.0	32.0	32.0	50.0	18.0
	DRU-28L-18L	28	18	41.0	32.0	41.0	52.0	19.0
	DRU-28L-22L	28	22	41.0	36.0	41.0	54.0	21.0
	DRU-35L-22L	35	22	50.0	36.0	46.0	59.0	21.0
	DRU-35L-28L	35	28	50.0	41.0	46.0	59.0	21.0
S Heavy PN 630	DRU-08S-06S	8	6	19.0	17.0	17.0	47.0	18.0
	DRU-10S-06S	10	6	22.0	17.0	19.0	48.0	17.5
	DRU-10S-08S	10	8	22.0	19.0	19.0	48.0	17.5
	DRU-12S-06S	12	6	24.0	17.0	22.0	50.0	19.5
	DRU-12S-08S	12	8	24.0	19.0	22.0	50.0	19.5
	DRU-12S-10S	12	10	24.0	22.0	22.0	51.0	19.0
	DRU-14S-10S	14	10	27.0	22.0	24.0	54.0	20.5
	DRU-14S-12S	14	12	27.0	24.0	24.0	54.0	20.5
PN 400	DRU-16S-12S	16	12	30.0	24.0	27.0	54.0	20.0
	DRU-16S-14S	16	14	30.0	27.0	27.0	57.0	21.5
	DRU-20S-10S	20	10	36.0	22.0	32.0	60.0	22.0
	DRU-20S-12S	20	12	36.0	24.0	32.0	60.0	22.0
	DRU-20S-16S	20	16	36.0	30.0	32.0	63.0	23.0
	DRU-25S-16S	25	16	46.0	30.0	41.0	68.0	25.0
	DRU-25S-20S	25	20	46.0	36.0	41.0	71.0	25.5
	DRU-30S-20S	30	20	50.0	36.0	46.0	74.0	26.0
	DRU-30S-25S	30	25	50.0	46.0	46.0	77.0	26.5
PN 315	DRU-38S-30S	38	30	60.0	50.0	55.0	87.0	29.5

• All dimensions in millimeters unless specified as “inch”. Dimension are for reference only, subject to change
• Dimensions given approximate length with tightened nut.

DUT

Union Tee

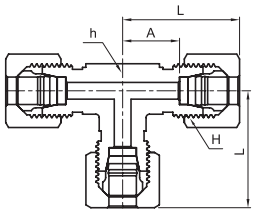

Series	Part Number	Tube O.D.	Dimension			
			H	h	L	A
LL Very Light PN 100	DUT-04LL	4	10.0	9.0	21.0	11.0
	DUT-06LL	6	12.0	9.0	21.0	9.5
	DUT-08LL	8	14.0	12.0	23.0	11.5
	DUT-10LL	10	17.0	14.0	24.0	12.5
	DUT-12LL	12	19.0	14.0	27.0	15.0
L Light PN 315	DUT-06L	6	14.0	12.0	27.0	12.0
	DUT-08L	8	17.0	12.0	29.0	14.0
	DUT-10L	10	19.0	14.0	30.0	15.0
	DUT-12L	12	22.0	17.0	32.0	17.0
	DUT-15L	15	27.0	19.0	36.0	21.0
	DUT-18L	18	32.0	24.0	40.0	23.5
PN 160	DUT-22L	22	36.0	27.0	44.0	27.5
	DUT-28L	28	41.0	36.0	47.0	30.5
	DUT-35L	35	50.0	41.0	56.0	34.5
	DUT-42L	42	60.0	50.0	63.0	40.0
S Heavy PN 630	DUT-06S	6	17.0	12.0	31.0	16.0
	DUT-08S	8	19.0	14.0	32.0	17.0
	DUT-10S	10	22.0	17.0	34.0	17.5
	DUT-12S	12	24.0	17.0	38.0	21.5
	DUT-14S	14	27.0	19.0	40.0	22.0
PN 400	DUT-16S	16	30.0	24.0	43.0	24.5
	DUT-20S	20	36.0	27.0	48.0	26.5
	DUT-25S	25	46.0	36.0	54.0	30.0
	DUT-30S	30	50.0	41.0	62.0	35.5
PN 315	DUT-38S	38	60.0	50.0	72.0	41.0

DUC

Union Cross

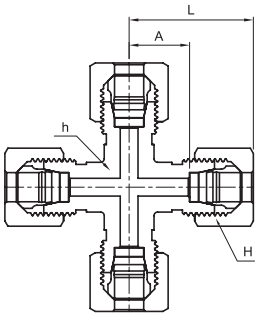

Series	Part Number	Tube O.D.	Dimension			
			H	h	L	A
LL Very Light PN 100	DUC-04LL	4	10.0	9.0	21.0	11.0
	DUC-06LL	6	12.0	9.0	21.0	9.5
	DUC-08LL	8	14.0	12.0	23.0	11.5
	DUC-10LL	10	17.0	14.0	24.0	12.5
	DUC-12LL	12	19.0	14.0	27.0	15.0
L Light PN 315	DUC-06L	6	14.0	12.0	27.0	12.0
	DUC-08L	8	17.0	12.0	29.0	14.0
	DUC-10L	10	19.0	14.0	30.0	15.0
	DUC-12L	12	22.0	17.0	32.0	17.0
	DUC-15L	15	27.0	19.0	36.0	21.0
	DUC-18L	18	32.0	24.0	40.0	23.5
PN 160	DUC-22L	22	36.0	27.0	44.0	27.5
	DUC-28L	28	41.0	36.0	47.0	30.5
	DUC-35L	35	50.0	41.0	56.0	34.5
	DUC-42L	42	60.0	50.0	63.0	40.0
S Heavy PN 630	DUC-06S	6	17.0	12.0	31.0	16.0
	DUC-08S	8	19.0	14.0	32.0	17.0
	DUC-10S	10	22.0	17.0	34.0	17.5
	DUC-12S	12	24.0	17.0	38.0	21.5
	DUC-14S	14	27.0	19.0	40.0	22.0
PN 400	DUC-16S	16	30.0	24.0	43.0	24.5
	DUC-20S	20	36.0	27.0	48.0	26.5
	DUC-25S	25	46.0	36.0	54.0	30.0
	DUC-30S	30	50.0	41.0	62.0	35.5
PN 315	DUC-38S	38	60.0	50.0	72.0	41.0

• All dimensions in millimeters unless specified as “inch”. Dimension are for reference only, subject to change
• Dimensions given approximate length with tightened nut.

DRUT

Reducing Union Tee

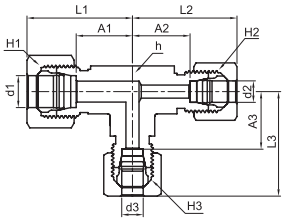

Series	Part Number	Tube O.D.			Dimension									
		d1	d2	d3	H1	H2	H3	h	L1	L2	L3	A1	A2	A3
L Light PN 316	DRUT-06L-06L-08L	6	6	8	14	14	17	14	29	29	29	14.0	14.0	14.0
	DRUT-08L-08L-06L	8	8	6	17	17	14	14	29	29	29	14.0	14.0	14.0
PN 315	DRUT-06L-06L-10L	6	6	10	14	14	19	14	30	30	30	15.0	15.0	15.0
	DRUT-08L-08L-10L	8	8	10	17	17	19	14	30	30	30	15.0	15.0	15.0
	DRUT-10L-10L-06L	10	10	6	19	19	14	14	30	30	30	15.0	15.0	15.0
	DRUT-10L-10L-08L	10	10	8	19	19	17	14	30	30	30	15.0	15.0	15.0
	DRUT-10L-06L-10L	10	6	10	19	14	19	14	30	30	30	15.0	15.0	15.0
PN 315	DRUT-08L-08L-12L	8	8	12	17	17	22	17	32	32	32	17.0	17.0	17.0
	DRUT-12L-12L-06L	12	12	6	22	22	14	17	32	32	32	17.0	17.0	17.0
	DRUT-12L-08L-08L	12	8	8	22	17	17	17	32	32	32	17.0	17.0	17.0
	DRUT-12L-12L-08L	12	12	8	22	22	17	17	32	32	32	17.0	17.0	17.0
	DRUT-12L-10L-10L	12	10	10	22	19	19	17	32	32	32	17.0	17.0	17.0
	DRUT-12L-12L-10L	12	12	10	22	22	19	17	32	32	32	17.0	17.0	17.0
	DRUT-12L-10L-12L	12	10	12	22	19	22	17	32	32	32	17.0	17.0	17.0
PN 315	DRUT-10L-10L-15L	10	10	15	19	19	27	19	36	36	36	21.0	21.0	21.0
	DRUT-12L-12L-15L	12	12	15	22	22	27	19	36	36	36	21.0	21.0	21.0
	DRUT-15L-15L-06L	15	15	6	27	27	14	19	36	36	36	21.0	21.0	21.0
	DRUT-15L-15L-10L	15	15	10	27	27	19	19	36	36	36	21.0	21.0	21.0
	DRUT-15L-12L-12L	15	12	12	27	22	22	19	36	36	36	21.0	21.0	21.0
	DRUT-15L-15L-12L	15	15	12	27	27	22	19	36	36	36	21.0	21.0	21.0
	DRUT-15L-12L-15L	15	12	15	27	22	27	19	36	36	36	21.0	21.0	21.0
PN 315	DRUT-12L-12L-18L	12	12	18	22	22	32	24	39	39	40	24.0	24.0	23.5
	DRUT-18L-10L-10L	18	10	10	32	19	19	24	40	39	39	23.5	24.0	24.0
	DRUT-18L-18L-10L	18	18	10	32	32	19	24	40	40	39	23.5	23.5	24.0
	DRUT-18L-18L-12L	18	18	12	32	32	22	24	40	40	39	23.5	23.5	24.0
	DRUT-18L-18L-15L	18	18	15	32	32	27	24	40	40	39	23.5	23.5	24.0
	DRUT-18L-10L-18L	18	10	18	32	19	32	27	40	39	40	23.5	24.0	23.5
PN 160	DRUT-22L-22L-10L	22	22	10	36	36	19	27	44	44	43	27.5	27.5	28.0
	DRUT-22L-22L-12L	22	22	12	36	36	22	27	44	44	43	27.5	27.5	28.0
	DRUT-22L-15L-15L	22	15	15	36	27	27	27	44	43	43	27.5	28.0	28.0
	DRUT-22L-22L-15L	22	22	15	36	36	27	27	44	44	43	27.5	27.5	28.0
	DRUT-22L-18L-18L	22	18	18	36	32	32	27	44	44	44	27.5	27.5	27.5
	DRUT-22L-22L-18L	22	22	18	36	36	32	27	44	44	44	27.5	27.5	27.5
	DRUT-22L-18L-22L	22	18	22	36	32	36	27	44	44	44	27.5	27.5	27.5
PN 160	DRUT-28L-28L-10L	28	28	10	41	41	19	36	47	44	46	30.5	30.5	31.0
	DRUT-28L-28L-12L	28	28	12	41	41	22	36	47	47	46	30.5	30.5	31.0
	DRUT-28L-28L-15L	28	28	15	41	41	27	36	47	47	46	30.5	30.5	31.0
	DRUT-28L-28L-18L	28	28	18	41	41	32	36	47	47	47	30.5	30.5	30.5
	DRUT-28L-22L-22L	28	22	22	41	36	36	36	47	47	47	30.5	30.5	30.5
	DRUT-28L-28L-22L	28	28	22	41	41	36	36	47	47	47	30.5	30.5	30.5
S Heavy PN 630	DRUT-10S-10S-06S	10	10	6	22	22	17	17	34	34	33	17.5	17.5	18.0
	DRUT-12S-08S-08S	12	8	8	24	19	19	17	38	37	37	21.5	22.0	22.0
	DRUT-12S-12S-08S	12	12	8	24	24	19	17	38	38	37	21.5	21.5	22.0
	DRUT-12S-12S-10S	12	12	10	24	24	22	17	38	38	38	21.5	21.5	21.5
PN 400	DRUT-12S-12S-16S	12	12	16	24	24	30	24	42	42	43	25.5	25.5	24.5
	DRUT-16S-16S-06S	16	16	6	30	30	17	24	43	43	41	24.5	24.5	26.0
	DRUT-16S-16S-08S	16	16	8	30	30	19	24	43	43	41	24.5	24.5	26.0
	DRUT-16S-16S-10S	16	16	10	30	30	22	24	43	43	42	24.5	24.5	25.5
	DRUT-16S-16S-12S	16	16	12	30	30	24	24	43	43	42	24.5	24.5	25.5
PN 400	DRUT-16S-16S-20S	16	16	20	30	30	36	27	47	47	48	28.5	28.5	26.5
	DRUT-20S-20S-10S	20	20	10	36	36	22	27	48	48	46	26.5	26.5	29.5
	DRUT-20S-20S-12S	20	20	12	36	36	24	27	48	48	46	26.5	26.5	29.5
	DRUT-20S-20S-16S	20	20	16	36	36	30	27	48	48	47	26.5	26.5	28.5
PN 400	DRUT-20S-20S-25S	20	20	25	36	36	46	36	53	53	54	31.5	31.5	30.0
	DRUT-25S-25S-16S	25	25	16	46	46	30	36	54	54	52	30.0	30.0	33.5
	DRUT-25S-25S-20S	25	25	20	46	46	36	36	54	54	53	30.0	30.0	31.5
	DRUT-25S-25S-30S	25	25	30	46	46	50	41	61	61	62	37.0	37.0	35.5

- All dimensions in millimeters unless specified as “inch”. Dimension are for reference only, subject to change
- Dimensions given approximate length with tightened nut.

DBHU
Bulkhead Union

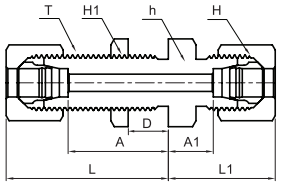

D=16mm Max Bulkhead thickness

Series	Part Number	Tube O.D.	Dimension							
			H	H1	h	L	L1	A	A1	T
L Light PN 315	DBHU-06L	6	14.0	17.0	17.0	42.0	22.0	27.0	7.0	M12 x 1.5
	DBHU-08L	8	17.0	19.0	19.0	42.0	23.0	27.0	8.0	M14 x 1.5
	DBHU-10L	10	19.0	22.0	22.0	43.0	25.0	28.0	10.0	M16 x 1.5
	DBHU-12L	12	22.0	24.0	24.0	44.0	25.0	29.0	10.0	M18 x 1.5
	DBHU-15L	15	27.0	30.0	27.0	46.0	27.0	31.0	12.0	M22 x 1.5
	DBHU-18L	18	32.0	36.0	32.0	49.0	30.0	32.5	13.5	M26 x 1.5
PN 160	DBHU-22L	22	36.0	41.0	36.0	51.0	33.0	34.5	16.5	M30 x 2.0
	DBHU-28L	28	41.0	46.0	41.0	52.0	35.0	35.5	18.5	M36 x 2.0
	DBHU-35L	35	50.0	55.0	50.0	58.0	40.0	36.5	18.5	M45 x 2.0
	DBHU-42L	42	60.0	65.0	60.0	59.0	42.0	36.0	19.0	M52 x 2.0
S Heavy PN 630	DBHU-06S	6	17.0	19.0	19.0	44.0	27.0	29.0	12.0	M14 x 1.5
	DBHU-08S	8	19.0	22.0	22.0	44.0	28.0	29.0	13.0	M16 x 1.5
	DBHU-10S	10	22.0	24.0	24.0	46.0	31.0	29.5	14.5	M18 x 1.5
	DBHU-12S	12	24.0	27.0	27.0	47.0	31.0	30.5	14.5	M20 x 1.5
	DBHU-14S	14	27.0	30.0	30.0	50.0	35.0	32.0	17.0	M22 x 1.5
PN 400	DBHU-16S	16	30.0	32.0	32.0	50.0	35.0	31.5	16.5	M24 x 1.5
	DBHU-20S	20	36.0	41.0	41.0	55.0	39.0	33.5	17.5	M30 x 2.0
	DBHU-25S	25	46.0	46.0	46.0	59.0	44.0	35.0	20.0	M36 x 2.0
	DBHU-30S	30	50.0	50.0	50.0	64.0	48.0	37.5	21.5	M42 x 2.0
PN 315	DBHU-38S	38	60.0	65.0	65.0	68.0	53.0	37.0	22.0	M52 x 2.0

DBUW
Weld Bulkhead Union

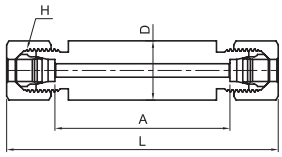

Series	Part Number	Tube O.D.	Dimension			
			H	D	L	A
L Light PN 315	DBUW-06L	6	14.0	18.0	85.0	56.0
	DBUW-08L	8	17.0	20.0	85.0	56.0
	DBUW-10L	10	19.0	22.0	87.0	58.0
	DBUW-12L	12	22.0	25.0	87.0	58.0
	DBUW-15L	15	27.0	28.0	100.0	70.0
	DBUW-18L	18	32.0	32.0	101.0	69.0
PN 315	DBUW-22L	22	36.0	36.0	105.0	73.0
	DBUW-28L	28	41.0	40.0	106.0	73.0
	DBUW-35L	35	50.0	50.0	114.0	71.0
	DBUW-42L	42	60.0	60.0	115.0	70.0
S Heavy PN 630	DBUW-06S	6	17.0	20.0	89.0	60.0
	DBUW-08S	8	19.0	22.0	89.0	60.0
	DBUW-10S	10	22.0	25.0	91.0	59.0
	DBUW-12S	12	24.0	28.0	91.0	59.0
	DBUW-14S	14	27.0	30.0	107.0	72.0
PN 400	DBUW-16S	16	30.0	35.0	107.0	71.0
	DBUW-20S	20	36.0	38.0	114.0	71.0
	DBUW-25S	25	46.0	45.0	120.0	72.0
	DBUW-30S	30	50.0	50.0	126.0	73.0
PN 315	DBUW-38S	38	60.0	60.0	133.0	72.0

• All dimensions in millimeters unless specified as “inch”. Dimension are for reference only, subject to change
• Dimensions given approximate length with tightened nut.

DBUE

Bulkhead Union Elbow

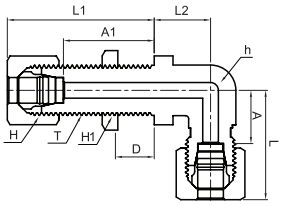

D=16mm Max Bulkhead thickness

Series	Part Number	Tube O.D.	Dimension								
			H	H1	h	L	L1	L2	A	A1	T
L Light PN 315	DBUE-06L	6	14.0	17.0	12.0	27.0	42.0	14.0	12.0	27.0	M12 x 1.5
	DBUE-08L	8	17.0	19.0	12.0	29.0	42.0	17.0	14.0	27.0	M14 x 1.5
	DBUE-10L	10	19.0	22.0	14.0	30.0	43.0	18.0	15.0	28.0	M16 x 1.5
	DBUE-12L	12	22.0	24.0	17.0	32.0	44.0	20.0	17.0	29.0	M18 x 1.5
	DBUE-15L	15	27.0	30.0	19.0	36.0	46.0	23.0	21.0	31.0	M22 x 1.5
	DBUE-18L	18	32.0	36.0	24.0	40.0	49.0	24.0	23.5	32.5	M26 x 1.5
PN 160	DBUE-22L	22	36.0	41.0	27.0	44.0	51.0	30.0	27.5	34.5	M30 x 2.0
	DBUE-28L	28	41.0	46.0	36.0	47.0	52.0	34.0	30.5	35.5	M36 x 2.0
	DBUE-35L	35	50.0	55.0	41.0	56.0	58.0	39.0	34.5	36.5	M45 x 2.0
	DBUE-42L	42	60.0	65.0	50.0	63.0	59.0	43.0	40.0	36.0	M52 x 2.0
S Heavy PN 630	DBUE-06S	6	17.0	19.0	12.0	31.0	44.0	17.0	16.0	29.0	M14 x 1.5
	DBUE-08S	8	19.0	22.0	14.0	32.0	44.0	18.0	17.0	29.0	M16 x 1.5
	DBUE-10S	10	22.0	24.0	17.0	34.0	46.0	20.0	17.5	29.5	M18 x 1.5
	DBUE-12S	12	24.0	27.0	17.0	38.0	47.0	21.0	21.5	30.5	M20 x 1.5
	DBUE-14S	14	27.0	30.0	19.0	40.0	50.0	23.0	22.0	32.0	M22 x 1.5
PN 400	DBUE-16S	16	30.0	32.0	24.0	43.0	50.0	24.0	24.5	31.5	M24 x 1.5
	DBUE-20S	20	36.0	41.0	27.0	48.0	55.0	30.0	26.5	33.5	M30 x 2.0
	DBUE-25S	25	46.0	46.0	36.0	54.0	59.0	34.0	30.0	35.0	M36 x 2.0
	DBUE-30S	30	50.0	50.0	41.0	62.0	64.0	39.0	35.5	37.5	M42 x 2.0
PN 315	DBUE-38S	38	60.0	65.0	50.0	72.0	68.0	43.0	41.0	37.0	M52 x 2.0

• All dimensions in millimeters unless specified as “inch”. Dimension are for reference only, subject to change
• Dimensions given approximate length with tightened nut.

DCM-UO/MO (Unified/Mertic Parallel)

Male Connector with O-Ring

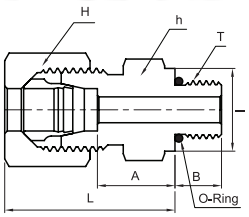

Unified Thread Type

Series	Part Number	Tube O.D.	Dimension						
			H	h	I	L	A	B	T
L Light PN 315	DCM-08L-04UO	8	17.0	17.0	14.4	25.0	9.0	10.0	7/16-20UNF-2A
	DCM-10L-04UO	10	19.0	17.0	14.4	26.0	10.0	11.0	7/16-20UNF-2A
	DCM-12L-06UO	12	22.0	19.0	17.6	26.0	10.0	11.0	9/16-18UNF-2A
	DCM-12L-08UO	12	22.0	24.0	22.3	28.0	11.0	13.0	3/4-16UNF-2A
	DCM-12L-10UO	12	22.0	27.0	25.5	29.0	12.7	14.3	7/8-14UNF-2A
	DCM-15L-08UO	15	27.0	24.0	22.3	29.0	11.0	14.0	3/4-16UNF-2A
	DCM-15L-10UO	15	27.0	27.0	25.5	30.0	12.7	15.3	7/8-14UNF-2A
	DCM-18L-08UO	18	32.0	27.0	22.3	31.0	11.0	14.5	3/4-16UNF-2A
	DCM-18L-10UO	18	32.0	27.0	25.5	31.0	12.7	14.8	7/8-14UNF-2A
PN 160	DCM-22L-10UO	22	36.0	32.0	25.5	33.0	12.7	16.8	7/8-14UNF-2A
	DCM-22L-12UO	22	36.0	32.0	31.9	33.0	15.0	16.5	1 1/16-12UN-2A
	DCM-22L-16UO	22	36.0	41.0	38.2	34.0	15.0	17.5	1 5/16-12UN-2A
	DCM-28L-12UO	28	41.0	41.0	31.9	34.0	15.0	17.5	1 1/16-12UN-2A
	DCM-28L-16UO	28	41.0	41.0	38.2	34.0	15.0	17.5	1 5/16-12UN-2A
	DCM-35L-16UO	35	50.0	46.0	38.2	39.0	15.0	17.5	1 5/16-12UN-2A
	DCM-35L-20UO	35	50.0	50.0	47.7	39.0	15.0	17.5	1 5/8-12UN-2A
	DCM-42L-20UO	42	60.0	55.0	47.7	42.0	15.0	19.0	1 5/8-12UN-2A
S Heavy PN 630	DCM-08S-04UO	8	19.0	17.0	16.0	30.0	9.0	15.0	7/16-20UNF-2A
	DCM-10S-06UO	10	22.0	19.0	17.6	31.0	10.0	14.5	9/16-18UNF-2A
	DCM-12S-06UO	12	24.0	22.0	17.6	31.0	10.0	14.5	9/16-18UNF-2A
	DCM-12S-08UO	12	24.0	24.0	22.3	34.0	11.0	17.5	3/4-16UNF-2A
PN 400	DCM-16S-08UO	16	30.0	24.0	22.3	34.0	11.0	15.5	3/4-16UNF-2A
	DCM-16S-10UO	16	30.0	27.0	25.5	37.0	12.7	18.8	7/8-14UNF-2A
	DCM-20S-08UO	20	36.0	32.0	22.3	42.0	11.0	20.5	3/4-16UNF-2A
	DCM-20S-10UO	20	36.0	32.0	25.5	42.0	12.7	20.8	7/8-14UNF-2A
	DCM-20S-12UO	20	36.0	32.0	31.9	42.0	15.0	20.5	1 1/16-12UN-2A
	DCM-25S-12UO	25	46.0	36.0	31.9	47.0	15.0	23.0	1 1/16-12UN-2A
	DCM-25S-16UO	25	46.0	41.0	38.2	47.0	15.0	23.0	1 5/16-12UN-2A
	DCM-30S-16UO	30	50.0	46.0	38.2	50.0	15.0	23.5	1 5/16-12UN-2A
	DCM-30S-20UO	30	50.0	50.0	47.7	50.0	15.0	23.5	1 5/8-12UN-2A
PN 315	DCM-38S-20UO	38	60.0	55.0	47.7	57.0	15.0	26.0	1 5/8-12UN-2A

Metric Parallel Tread Type

Series	Part Number	Tube O.D.	Dimension						
			H	h	I	L	A	B	T
L Light PN 315	DCM-06L-MO10	6	14.0	14.0	-	23.0	10.0	8.5	M10 x 1.0
	DCM-08L-MO12	8	17.0	17.0	-	25.0	11.5	10.0	M12 x 1.5
	DCM-10L-MO14	10	19.0	19.0	-	26.0	11.5	11.0	M14 x 1.5
	DCM-12L-MO16	12	22.0	22.0	-	27.0	13.0	12.0	M16 x 1.5
	DCM-15L-MO18	15	27.0	24.0	-	29.0	14.5	13.5	M18 x 1.5
	DCM-18L-MO22	18	32.0	27.0	-	30.0	15.5	14.0	M22 x 1.5
PN 160	DCM-22L-MO26	22	36.0	32.0	-	32.0	16.0	16.0	M26 x 1.5
	DCM-28L-MO33	28	41.0	41.0	38.0	34.0	19.0	17.5	M33 x 2.0
	DCM-35L-MO42	35	50.0	50.0	48.0	39.0	19.5	17.5	M42 x 2.0
S Heavy PN 630	DCM-06S-MO12	6	17.0	17.0	-	27.0	11.5	12.0	M12 x 1.0
	DCM-08S-MO14	8	19.0	19.0	-	27.0	11.5	12.0	M14 x 1.5
	DCM-10S-MO16	10	22.0	22.0	-	29.0	13.0	12.5	M1 x 1.5
	DCM-12S-MO18	12	24.0	24.0	-	29.0	14.5	13.0	M18 x 1.5
PN 400	DCM-16S-MO22	16	30.0	27.0	-	33.0	15.5	15.0	M22 x 1.5
	DCM-20S-MO27	20	36.0	32.0	-	37.0	19.0	15.0	M27 x 2.0
	DCM-25S-MO33	25	46.0	41.0	38.0	41.0	19.0	17.0	M33 x 2.0
	DCM-30S-MO42	30	50.0	50.0	48.0	45.0	19.5	18.5	M42 x 2.0

• All dimensions in millimeters unless specified as “inch”. Dimension are for reference only, subject to change
• Dimensions given approximate length with tightened nut.

DCM-GM (BSP Parallel)

Male Connector

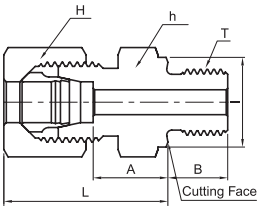

BSP Parallel Thread Type

Series	Part Number	Tube O.D.	Dimension						
			H	h	l	L	A	B	T
L Light PN 315	DCM-06L-01GM	6	14.0	14.0	14.0	23.0	8.5	8.0	PF 1/8
	DCM-06L-02GM	6	14.0	19.0	18.0	25.0	10.0	12.0	PF 1/4
	DCM-06L-03GM	6	14.0	22.0	22.0	26.0	11.5	12.0	PF 3/8
	DCM-06L-04GM	6	14.0	27.0	26.0	27.0	12.0	14.0	PF 1/2
	DCM-08L-01GM	8	17.0	14.0	14.0	23.0	8.5	8.0	PF 1/8
	DCM-08L-02GM	8	17.0	19.0	18.0	25.0	10.0	12.0	PF 1/4
	DCM-08L-03GM	8	17.0	22.0	22.0	26.0	11.5	12.0	PF 3/8
	DCM-08L-04GM	8	17.0	27.0	26.0	27.0	12.0	14.0	PF 1/2
	DCM-10L-02GM	10	19.0	19.0	18.0	26.0	11.0	12.0	PF 1/4
	DCM-10L-03GM	10	19.0	22.0	22.0	27.0	12.5	12.0	PF 3/8
	DCM-10L-04GM	10	19.0	27.0	26.0	28.0	13.0	14.0	PF 1/2
	DCM-12L-02GM	12	22.0	19.0	18.0	27.0	12.0	12.0	PF 1/4
	DCM-12L-03GM	12	22.0	22.0	22.0	27.0	12.5	12.0	PF 3/8
	DCM-12L-04GM	12	22.0	27.0	26.0	28.0	13.0	14.0	PF 1/2
	DCM-12L-06GM	12	22.0	32.0	32.0	29.0	14.0	16.0	PF 3/4
	DCM-15L-03GM	15	27.0	24.0	22.0	29.0	13.5	12.0	PF 3/8
	DCM-15L-04GM	15	27.0	27.0	26.0	29.0	14.0	14.0	PF 1/2
	DCM-15L-06GM	15	27.0	32.0	32.0	30.0	15.0	16.0	PF 3/4
	DCM-18L-03GM	18	32.0	27.0	22.0	29.5	14.0	12.0	PF 3/8
	DCM-18L-04GM	18	32.0	27.0	26.0	31.0	14.5	14.0	PF 1/2
	DCM-18L-06GM	18	32.0	32.0	32.0	30.0	14.5	16.0	PF 3/4
PN 160	DCM-22L-04GM	22	36.0	32.0	26.0	33.0	16.5	14.0	PF 1/2
	DCM-22L-06GM	22	36.0	32.0	32.0	33.0	16.5	16.0	PF 3/4
	DCM-28L-06GM	28	41.0	41.0	32.0	34.0	17.5	16.0	PF 3/4
	DCM-28L-08GM	28	41.0	41.0	39.0	34.0	17.5	18.0	PF 1
	DCM-35L-08GM	35	50.0	46.0	39.0	39.0	17.5	18.0	PF 1
	DCM-35L-10GM	35	50.0	50.0	49.0	39.0	17.5	20.0	PF 1 1/4
	DCM-42L-12GM	42	60.0	55.0	55.0	42.0	19.0	22.0	PF 1 1/2
S Heavy PB 630	DCM-06S-02GM	6	17.0	19.0	18.0	28.0	13.0	12.0	PF 1/4
	DCM-06S-04GM	6	17.0	27.0	26.0	33.0	18.0	14.0	PF 1/2
	DCM-08S-02GM	8	19.0	19.0	18.0	30.0	15.0	12.0	PF 1/4
	DCM-08S-03GM	8	19.0	22.0	22.0	30.0	15.5	12.0	PF 3/8
	DCM-10S-02GM	10	22.0	19.0	18.0	31.0	14.5	12.0	PF 1/4
	DCM-10S-03GM	10	22.0	22.0	22.0	31.0	15.0	12.0	PF 3/8
	DCM-10S-04GM	10	22.0	27.0	26.0	34.0	17.5	14.0	PF 1/2
	DCM-12S-02GM	12	24.0	22.0	18.0	33.0	16.5	12.0	PF 1/4
	DCM-12S-03GM	12	24.0	22.0	22.0	33.0	17.0	12.0	PF 3/8
	DCM-12S-04GM	12	24.0	27.0	26.0	34.0	17.5	14.0	PF 1/2
	DCM-14S-03GM	14	27.0	24.0	22.0	36.0	18.5	12.0	PF 3/8
	DCM-14S-04GM	14	27.0	27.0	26.0	37.0	19.0	14.0	PF 1/2
PB 400	DCM-16S-03GM	16	30.0	27.0	22.0	36.0	18.0	12.0	PF 3/8
	DCM-16S-04GM	16	30.0	27.0	26.0	37.0	18.5	14.0	PF 1/2
	DCM-16S-06GM	16	30.0	32.0	32.0	39.0	20.5	16.0	PF 3/4
	DCM-20S-04GM	20	36.0	32.0	26.0	42.0	20.5	14.0	PF 1/2
	DCM-20S-06GM	20	36.0	32.0	32.0	42.0	20.5	16.0	PF 3/4
	DCM-25S-06GM	25	46.0	41.0	32.0	47.0	23.0	16.0	PF 3/4
	DCM-25S-08GM	25	46.0	41.0	39.0	47.0	23.0	18.0	PF 1
PB 250	DCM-30S-08GM	30	50.0	46.0	39.0	50.0	23.5	18.0	PF 1
	DCM-30S-10GM	30	50.0	50.0	49.0	50.0	23.5	20.0	PF 1 1/4
	DCM-38S-10GM	38	60.0	55.0	49.0	57.0	26.0	20.0	PF 1 1/4
	DCM-38S-12GM	38	60.0	55.0	55.0	57.0	26.0	22.0	PF 1 1/2

• All dimensions in millimeters unless specified as “inch”. Dimension are for reference only, subject to change
• Dimensions given approximate length with tightened nut.

DCM-R (BSP Tapered)

Male Connector

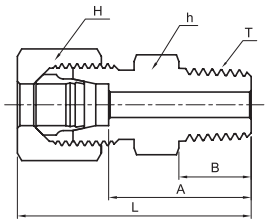

BSP Tapered Thread Type

Series	Part Number	Tube O.D.	Dimension					
			H	h	L	A	B	T
LL Very Light PN 100	DCM-04LL-01R	4	10.0	11.0	26.0	16.0	8.0	PT 1/8
	DCM-06LL-01R	6	12.0	11.0	26.0	14.5	8.0	PT 1/8
	DCM-08LL-01R	8	14.0	12.0	28.0	16.5	8.0	PT 1/8
	DCM-08LL-02R	8	14.0	14.0	32.0	20.5	12.0	PT 1/4
	DCM-10LL-02R	10	17.0	14.0	32.0	20.5	12.0	PT 1/4
	DCM-12LL-02R	12	19.0	17.0	32.0	20.0	12.0	PT 1/4
	DCM-12LL-03R	12	19.0	17.0	32.0	20.0	12.0	PT 3/8
L Light PN 315	DCM-06L-01R	6	14.0	12.0	30.0	15.0	8.0	PT 1/8
	DCM-08L-02R	8	17.0	17.0	35.0	20.0	12.0	PT 1/4
	DCM-10L-02R	10	19.0	17.0	36.0	21.0	12.0	PT 1/4
	DCM-12L-02R	12	22.0	19.0	37.0	22.0	12.0	PT 1/4
	DCM-12L-03R	12	22.0	19.0	37.0	22.0	12.0	PT 3/8
	DCM-12L-04R	12	22.0	24.0	39.0	24.0	14.0	PT 1/2
	DCM-15L-03R	15	27.0	24.0	38.0	23.0	12.0	PT 3/8
	DCM-15L-04R	15	27.0	24.0	40.0	25.0	14.0	PT 1/2
	DCM-18L-04R	18	32.0	27.0	41.0	25.5	14.0	PT 1/2
PN 160	DCM-22L-06R	22	36.0	32.0	46.0	29.5	16.0	PT 3/4

• All dimensions in millimeters unless specified as “inch”. Dimension are for reference only, subject to change
• Dimensions given approximate length with tightened nut.

DCM-M (Metric Parallel)

Male Connector

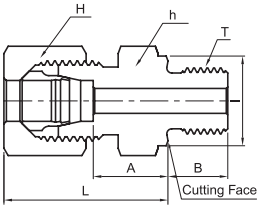

Metric Parallel Thread Type

Series	Part Number	Tube O.D.	Dimension						
			H	h	l	L	A	B	T
L Light PN 315	DCM-06L-M10M	6	14.0	14.0	14.0	23.0	8.5	8.0	M10 x 1.0
	DCM-08L-M12M	8	17.0	17.0	17.0	25.0	10.0	12.0	M12 x 1.5
	DCM-08L-M18M	8	17.0	24.0	23.0	.26.0	11.5	12.0	M18 x 1.5
	DCM-10L-M14M	10	19.0	19.0	19.0	26.0	11.0	12.0	M14 x 1.5
	DCM-10L-M16M	10	19.0	22.0	21.0	27.0	12.0	12.0	M16 x 1.5
	DCM-10L-M18M	10	19.0	24.0	23.0	27.0	12.5	12.0	M18 x 1.5
	DCM-10L-M22M	10	19.0	27.0	27.0	29.0	14.0	14.0	M22 x 1.5
	DCM-12L-M14M	12	22.0	19.0	19.0	26.0	11.0	12.0	M14 x 1.5
	DCM-12L-M16M	12	22.0	22.0	21.0	27.0	12.5	12.0	M16 x 1.5
	DCM-12L-M18M	12	22.0	24.0	23.0	27.0	12.5	12.0	M18 x 1.5
	DCM-12L-M22M	12	22.0	27.0	27.0	29.0	14.0	14.0	M22 x 1.5
	DCM-15L-M16M	15	27.0	24.0	21.0	28.0	13.0	12.0	M16 x 1.5
	DCM-15L-M18M	15	27.0	24.0	23.0	29.0	13.5	12.0	M18 x 1.5
	DCM-15L-M22M	15	27.0	27.0	27.0	30.0	15.0	14.0	M22 x 1.5
	DCM-18L-M18M	18	32.0	27.0	23.0	30.0	14.0	12.0	M18 x 1.5
	DCM-18L-M22M	18	32.0	27.0	27.0	31.0	14.5	14.0	M22 x 1.5
PN 160	DCM-22L-M22M	22	36.0	32.0	27.0	33.0	16.5	14.0	M22 x 1.5
	DCM-22L-M26M	22	36.0	32.0	31.0	33.0	16.5	16.0	M26 x 1.5
	DCM-28L-M33M	28	41.0	41.0	39.0	34.0	17.5	18.0	M33 x 2.0
	DCM-35L-M42M	35	50.0	50.0	49.0	39.0	17.5	20.0	M42 x 2.0
	DCM-42L-M48M	42	60.0	55.0	55.0	42.0	19.0	22.0	M48 x 2.0
S Heavy PB 630	DCM-06S-M12M	6	17.0	17.0	17.0	28.0	13.0	12.0	M12 x 1.5
	DCM-08S-M14M	8	19.0	19.0	19.0	30.0	15.0	12.0	M14 x 1.5
	DCM-10S-M16M	10	22.0	22.0	21.0	31.0	15.0	12.0	M16 x 1.5
	DCM-12S-M18M	12	24.0	24.0	23.0	33.0	17.0	12.0	M18 x 1.5
	DCM-12S-M22M	12	24.0	27.0	27.0	34.0	17.5	14.0	M22 x 1.5
	DCM-14S-M20M	14	27.0	27.0	25.0	37.0	19.0	14.0	M20 x 1.5
PB 400	DCM-16S-M18M	16	30.0	27.0	23.0	36.0	18.0	12.0	M18 x 1.5
	DCM-16S-M22M	16	30.0	27.0	27.0	37.0	18.5	14.0	M22 x 1.5
	DCM-20S-M27M	20	36.0	32.0	32.0	42.0	20.5	16.0	M27 x 2.0
	DCM-25S-M33M	25	46.0	41.0	39.0	47.0	23.0	18.0	M33 x 2.0
PB 250	DCM-30S-M42M	30	50.0	50.0	49.0	50.0	23.5	20.0	M42 x 2.0
	DCM-38S-M48M	38	60.0	55.0	55.0	57.0	26.0	22.0	M48 x 2.0

DCM-MK (Metric Tapered)

Male Connector

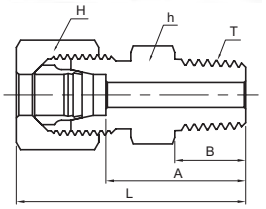

Metric Tapered Thread Type

Series	Part Number	Tube O.D.	Dimension					
			H	h	L	A	B	T
LL Very Light PN 100	DCM-04LL-M06K	4	10	9	26	16	8	M6 x 1keg
	DCM-04LL-M08K	4	10	10	26	16	8	M8 x 1keg
	DCM-06LL-M10K	6	12	11	26	14.5	8	M10 x 1keg
	DCM-08LL-M10K	8	14	12	28	16.5	8	M10 x 1keg

• All dimensions in millimeters unless specified as “inch”. Dimension are for reference only, subject to change
• Dimensions given approximate length with tightened nut.

DCM-GED (BSP Parallel with ED-Ring)

Male Connector with ED-Ring

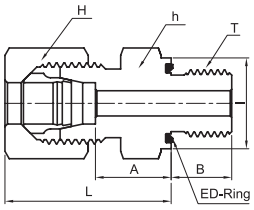

BSP Parallel Thread Type

Series	Part Number	Tube O.D.	Dimension						
			H	h	l	L	A	B	T
L Light PN 315	DCM-06L-01GED	6	14.0	14.0	14.0	23.0	8.5	8.0	PF 1/8
	DCM-06L-02GED	6	14.0	19.0	19.0	25.0	10.0	12.0	PF 1/4
	DCM-08L-01GED	8	17.0	14.0	14.0	24.0	9.5	8.0	PF 1/8
	DCM-08L-02GED	8	17.0	19.0	19.0	25.0	10.0	12.0	PF 1/4
	DCM-08L-03GED	8	17.0	22.0	22.0	26.0	11.5	12.0	PF 3/8
	DCM-10L-02GED	10	19.0	19.0	19.0	26.0	11.0	12.0	PF 1/4
	DCM-10L-03GED	10	19.0	22.0	22.0	27.0	12.5	12.0	PF 3/8
	DCM-10L-04GED	10	19.0	27.0	27.0	28.0	13.0	14.0	PF 1/2
	DCM-12L-02GED	12	22.0	19.0	19.0	27.0	12.0	12.0	PF 1/4
	DCM-12L-03GED	12	22.0	22.0	22.0	27.0	12.5	12.0	PF 3/8
	DCM-12L-04GED	12	22.0	27.0	27.0	28.0	13.0	14.0	PF 1/2
	DCM-15L-03GED	15	27.0	24.0	22.0	29.0	13.5	12.0	PF 3/8
	DCM-15L-04GED	15	27.0	27.0	27.0	29.0	14.0	14.0	PF 1/2
	DCM-18L-04GED	18	32.0	27.0	27.0	31.0	14.5	14.0	PF 1/2
	DCM-18L-06GED	18	32.0	32.0	32.0	31.0	14.5	16.0	PF 3/4
PN 160	DCM-22L-06GED	22	36.0	32.0	32.0	33.0	16.5	16.0	PF 3/4
	DCM-28L-08GED	28	41.0	41.0	40.0	34.0	17.5	18.0	PF 1
	DCM-35L-10GED	35	50.0	50.0	50.0	39.0	17.5	20.0	PF 1 1/4
	DCM-42L-12GED	42	60.0	55.0	55.0	42.0	19.0	22.0	PF 1 1/2
S Heavy PB 630	DCM-06S-02GED	6	17.0	19.0	19.0	28.0	13.0	12.0	PF 1/4
	DCM-08S-02GED	8	19.0	19.0	19.0	30.0	15.0	12.0	PF 1/4
	DCM-08S-03GED	8	19.0	22.0	22.0	30.0	15.5	12.0	PF 3/8
	DCM-10S-02GED	10	22.0	19.0	19.0	31.0	14.5	12.0	PF 1/4
	DCM-10S-03GED	10	22.0	22.0	22.0	31.0	15.0	12.0	PF 3/8
	DCM-10S-04GED	10	22.0	27.0	27.0	34.0	17.5	14.0	PF 1/2
	DCM-12S-02GED	12	24.0	22.0	19.0	33.0	16.5	12.0	PF 1/4
	DCM-12S-03GED	12	24.0	22.0	22.0	33.0	17.0	12.0	PF 3/8
	DCM-12S-04GED	12	24.0	27.0	32.0	34.0	17.5	14.0	PF 1/2
	DCM-14S-04GED	14	27.0	27.0	27.0	37.0	19.0	14.0	PF 1/2
PN 400	DCM-16S-03GED	16	30.0	27.0	22.0	36.0	18.0	12.0	PF 3/8
	DCM-16S-04GED	16	30.0	27.0	27.0	37.0	18.5	14.0	PF 1/2
	DCM-16S-06GED	16	30.0	32.0	27.0	39.0	20.5	16.0	PF 3/4
	DCM-20S-06GED	20	36.0	32.0	32.0	42.0	20.5	16.0	PF 3/4
	DCM-25S-04GED	25	46.0	41.0	27.0	47.0	23.0	14.0	PF 1/2
	DCM-25S-06GED	25	46.0	41.0	32.0	47.0	23.0	16.0	PF 3/4
	DCM-25S-08GED	25	46.0	41.0	40.0	47.0	23.0	18.0	PF 1
	DCM-30S-10GED	30	50.0	50.0	50.0	50.0	23.5	20.0	PF 1 1/4
PN 315	DCM-38S-12GED	38	60.0	55.0	55.0	57.0	26.0	22.0	PF 1 1/2

• All dimensions in millimeters unless specified as “inch”. Dimension are for reference only, subject to change
• Dimensions given approximate length with tightened nut.

DCM-MED (Metric Parallel with ED-Ring)

Male Connector with ED-Ring

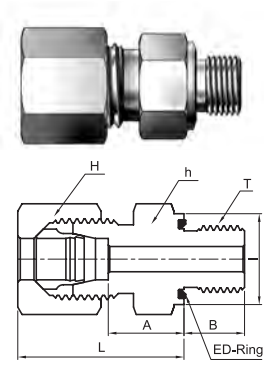

Metric Parallel Thread Type

Series	Part Number	Tube O.D.	Dimension						
			H	h	l	L	A	B	T
L Light PN315	DCM-06L-M10ED	6	14.0	14.0	14.0	23.0	8.5	8.0	M10 x 1.0
	DCM-08L-M12ED	8	17.0	17.0	17.0	25.0	10.0	12.0	M12 x 1.5
	DCM-10L-M14ED	10	19.0	19.0	19.0	26.0	11.0	12.0	M14 x 1.5
	DCM-12L-M16ED	12	22.0	22.0	22.0	27.0	12.5	12.0	M16 x 1.5
	DCM-12L-M18ED	12	22.0	24.0	24.0	27.0	12.5	12.0	M18 x 1.5
	DCM-12L-M22ED	12	22.0	27.0	27.0	29.0	14.0	14.0	M22 x 1.5
	DCM-15L-M18ED	15	27.0	24.0	24.0	29.0	13.5	12.0	M18 x 1.5
	DCM-15L-M22ED	15	27.0	27.0	27.0	30.0	15.0	14.0	M22 x 1.5
	DCM-18L-M22ED	18	32.0	27.0	27.0	31.0	14.5	14.0	M22 x 1.5
PN 160	DCM-22L-M26ED	22	36.0	32.0	32.0	33.0	16.5	16.0	M26 x 1.5
	DCM-28L-M33ED	28	41.0	41.0	40.0	34.0	17.5	18.0	M33 x 2.0
	DCM-35L-M42ED	35	50.0	50.0	50.0	39.0	17.5	20.0	M42 x 2.0
	DCM-42L-M48ED	42	60.0	55.0	55.0	42.0	19.0	22.0	M48 x 2.0
S Heavy PB 630	DCM-06S-M12ED	6	17.0	17.0	17.0	28.0	13.0	12.0	M12 x 1.5
	DCM-08S-M14ED	8	19.0	19.0	19.0	30.0	15.0	12.0	M14 x 1.5
	DCM-10S-M16ED	10	22.0	22.0	22.0	31.0	15.0	12.0	M16 x 1.5
	DCM-12S-M18ED	12	24.0	24.0	24.0	33.0	17.0	12.0	M18 x 1.5
	DCM-14S-M20ED	14	27.0	27.0	26.0	37.0	19.0	14.0	M20 x 1.5
PN 400	DCM-16S-M22ED	16	30.0	27.0	27.0	37.0	18.5	14.0	M22 x 1.5
	DCM-20S-M27ED	20	36.0	32.0	32.0	42.0	20.5	16.0	M27 x 2.0
	DCM-25S-M33ED	25	46.0	41.0	40.0	47.0	23.0	18.0	M33 x 2.0
	DCM-30S-M42ED	30	50.0	50.0	50.0	50.0	23.5	20.0	M42 x 2.0
PN 315	DCM-38S-M48ED	38	60.0	55.0	55.0	57.0	26.0	22.0	M48 x 2.0

• All dimensions in millimeters unless specified as “inch”. Dimension are for reference only, subject to change
• Dimensions given approximate length with tightened nut.

DCM-N (NPT Thread)

Male Connector

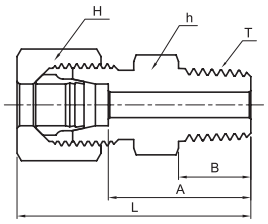

NPT Thread Type

Series	Part Number	Tube O.D.	Dimension					
			H	h	L	A	B	T
LL Very Light PN 100	DCM-04LL-01N	4	10.0	11.0	28.0	18.5	9.9	NPT 1/8
	DCM-06LL-01N	6	12.0	11.0	28.0	16.5	9.9	NPT 1/8
	DCM-08LL-01N	8	14.0	12.0	30.0	18.5	9.9	NPT 1/8
L Light PN 315	DCM-06L-01N	6	14.0	12.0	32.0	17.0	9.9	NPT 1/8
	DCM-06L-02N	6	14.0	17.0	38.0	23.0	14.2	NPT 1/4
	DCM-08L-02N	8	17.0	17.0	38.0	23.0	14.2	NPT 1/4
	DCM-10L-02N	10	19.0	17.0	39.0	24.0	14.2	NPT 1/4
	DCM-10L-03N	10	19.0	19.0	40.0	25.0	14.2	NPT 3/8
	DCM-12L-02N	12	22.0	19.0	40.0	25.0	14.2	NPT 1/4
	DCM-12L-03N	12	22.0	19.0	40.0	25.0	14.2	NPT 3/8
	DCM-12L-04N	12	22.0	22.0	45.0	30.0	19.1	NPT 1/2
	DCM-15L-04N	15	27.0	24.0	46.0	31.0	19.1	NPT 1/2
	DCM-18L-04N	18	32.0	27.0	48.0	31.5	19.1	NPT 1/2
PN 160	DCM-22L-06N	22	36.0	32.0	50.0	33.5	19.1	NPT 3/4
	DCM-28L-08N	28	41.0	41.0	56.0	39.5	23.9	NPT 1
	DCM-35L-10N	35	50.0	46.0	62.0	40.5	23.9	NPT 1 1/4
	DCM-42L-12N	42	60.0	55.0	65.0	42.0	25.4	NPT 1 1/2
S Heavy PN 630	DCM-06S-02N	6	17.0	17.0	43.0	28.0	14.2	NPT 1/4
	DCM-08S-02N	8	19.0	17.0	43.0	28.0	14.2	NPT 1/4
	DCM-10S-02N	10	22.0	19.0	44.0	27.5	14.2	NPT 1/4
	DCM-10S-03N	10	22.0	19.0	44.0	27.5	14.2	NPT 3/8
	DCM-12S-02N	12	24.0	22.0	46.0	29.5	14.2	NPT 1/4
	DCM-12S-03N	12	24.0	22.0	46.0	29.5	14.2	NPT 3/8
	DCM-12S-04N	12	24.0	22.0	51.0	34.5	19.1	NPT 1/2
	DCM-14S-04N	14	27.0	24.0	54.0	36.0	19.1	NPT 1/2
PN 400	DCM-16S-04N	16	30.0	27.0	54.0	35.5	19.1	NPT 1/2
	DCM-20S-06N	20	36.0	32.0	59.0	37.5	19.1	NPT 3/4
	DCM-25S-08N	25	46.0	41.0	69.0	45.0	23.9	NPT 1
	DCM-30S-10N	30	50.0	46.0	73.0	46.5	23.9	NPT 1 1/4
PN 315	DCM-38S-12N	38	60.0	55.0	80.0	49.0	25.4	NPT 1 1/2

• All dimensions in millimeters unless specified as “inch”. Dimension are for reference only, subject to change
• Dimensions given approximate length with tightened nut.

DME-R/MK (BSP Tapered/Metric Tapered)

Male Elbow

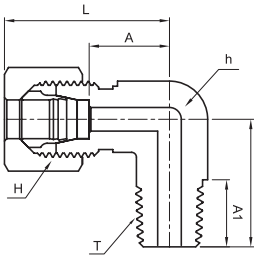

BSP Tapered Thread Type

Series	Part Number	Tube O.D.	Dimension						
			H	h	L	L1	A	A1	T
LL Very Light PN 100	DME-04LL-01R	4.0	10.0	9.0	21.0	17.0	11.0	10.0	PT 1/8
	DME-06LL-01R	6.0	12.0	9.0	21.0	17.0	9.5	10.0	PT 1/8
	DME-08LL-01R	8.0	14.0	12.0	23.0	20.0	11.5	10.0	PT 1/8
	DME-10LL-02R	10.0	17.0	14.0	24.0	23.0	12.5	14.0	PT 1/4
	DME-12LL-02R	12.0	19.0	17.0	25.0	23.0	13.0	14.0	PT 1/4
L Light PN 315	DME-06L-01R	6.0	14.0	12.0	27.0	20.0	12.0	10.0	PT 1/8
	DME-08L-02R	8.0	17.0	12.0	29.0	26.0	14.0	14.0	PT 1/4
	DME-10L-02R	10.0	19.0	14.0	30.0	27.0	15.0	14.0	PT 1/4
	DME-12L-03R	12.0	22.0	17.0	32.0	28.0	17.0	15.0	PT 3/8
	DME-15L-04R	15.0	27.0	19.0	36.0	34.0	21.0	19.0	PT 1/2
	DME-18L-04R	18.0	32.0	24.0	40.0	36.0	23.5	19.0	PT 1/2
S Heavy PN 400	DME-06S-02R	6.0	17.0	12.0	31.0	26.0	16.0	14.0	PT 1/4
	DME-08S-02R	8.0	19.0	14.0	32.0	27.0	17.0	14.0	PT 1/4
	DME-10S-03R	10.0	22.0	17.0	34.0	28.0	17.5	15.0	PT 3/8
	DME-12S-03R	12.0	24.0	17.0	38.0	28.0	21.5	15.0	PT 3/8
	DME-14S-04R	14.0	27.0	19.0	40.0	34.0	22.0	19.0	PT 1/2
	DME-16S-04R	16.0	30.0	24.0	43.0	36.0	24.5	19.0	PT 1/2

Metric Tapered Thread Type

Series	Part Number	Tube O.D.	Dimension						
			H	h	L	L1	A	A1	T
LL Very Light PN 100	DME-04LL-M08K	4	10.0	9.0	21.0	17.0	11.0	8.0	M8 x 1.0Keg
	DME-06LL-M10K	6	12.0	9.0	21.0	17.0	9.5	8.0	M10 x 1.0Keg
	DME-08LL-M10K	8	14.0	12.0	23.0	20.0	11.5	8.0	M10 x 1.0Keg
L Light PN 315	DME-06L-M10K	6	14.0	12.0	27.0	20.0	12.0	8.0	M10 x 1.0Keg
	DME-08L-M12K	8	17.0	12.0	29.0	26.0	14.0	12.0	M12 x 1.5Keg
	DME-10L-M14K	10	19.0	14.0	30.0	27.0	15.0	12.0	M14 x 1.5Keg
	DME-12L-M16K	12	22.0	17.0	32.0	28.0	17.0	14.0	M16 x 1.5Keg
	DME-15L-M18K	15	27.0	19.0	36.0	34.0	21.0	14.0	M18 x 1.5Keg
	DME-18L-M22K	18	32.0	24.0	40.0	36.0	23.5	17.0	M22 x 1.5Keg
S Heavy PN 400	DME-06S-M12K	6	17.0	12.0	31.0	26.0	16.0	12.0	M12 x 1.5Keg
	DME-08S-M14K	8	19.0	14.0	32.0	27.0	17.0	12.0	M14 x 1.5Keg
	DME-10S-M16K	10	22.0	17.0	34.0	28.0	17.5	12.0	M16 x 1.5Keg
	DME-12S-M18K	12	24.0	17.0	38.0	28.0	21.5	12.0	M18 x 1.5Keg
	DME-14S-M20K	14	27.0	19.0	40.0	32.0	22.0	14.0	M20 x 1.5Keg
	DME-16S-M22K	16	30.0	24.0	43.0	32.0	24.5	17.0	M22 x 1.5Keg

• All dimensions in millimeters unless specified as “inch”. Dimension are for reference only, subject to change
• Dimensions given approximate length with tightened nut.

DCF-G/M (BSP Parallel/Metric Parallel)

Female Connector

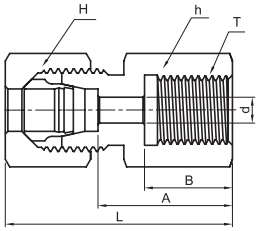

BSP Parallel Thread Type

Series	Part Number	Tube O.D.	Dimension						
			d	H	h	L	A	B	T
L Light PN 315	DCF-06L-01G	6	4.0	14.0	14.0	34.0	19.0	12.0	PF 1/8
	DCF-08L-02G	8	6.0	17.0	19.0	39.0	24.0	17.0	PF 1/4
	DCF-08L-03G	8	6.0	17.0	24.0	40.0	25.0	17.0	PF 3/8
	DCF-08L-04G	8	6.0	17.0	27.0	44.0	29.0	20.0	PF 1/2
	DCF-10L-02G	10	8.0	19.0	19.0	40.0	25.0	17.0	PF 1/4
	DCF-10L-03G	10	8.0	19.0	24.0	41.0	26.0	17.0	PF 3/8
	DCF-10L-04G	10	8.0	19.0	27.0	45.0	30.0	20.0	PF 1/2
	DCF-12L-03G	12	10.0	22.0	24.0	41.0	26.0	17.0	PF 3/8
	DCF-12L-04G	12	10.0	22.0	27.0	45.0	30.0	20.0	PF 1/2
	DCF-15L-04G	15	12.0	27.0	27.0	46.0	31.0	20.0	PF 1/2
	DCF-18L-04G	18	15.0	32.0	27.0	47.0	30.5	20.0	PF 1/2
PB 160	DCF-22L-06G	22	19.0	36.0	36.0	52.0	35.5	22.0	PF 3/4
	DCF-28L-08G	28	24.0	41.0	41.0	55.0	38.0	24.5	PF 1
	DCF-35L-10G	35	30.0	50.0	55.0	63.0	41.0	26.5	PF 1 1/4
	DCF-42L-12G	42	36.0	60.0	60.0	65.0	42.5	28.5	PF 1 1/2
S Heavy PB 630	DCF-06S-02G	6	4.0	17.0	19.0	41.0	26.0	17.0	PF 1/4
	DCF-08S-02G	8	5.0	19.0	19.0	41.0	26.0	17.0	PF 1/4
	DCF-10S-03G	10	7.0	22.0	24.0	43.0	26.5	17.0	PF 3/8
	DCF-12S-03G	12	8.0	24.0	24.0	43.0	26.5	17.0	PF 3/8
	DCF-14S-04G	14	10.0	27.0	30.0	50.0	32.0	20.0	PF 1/2
PB 400	DCF-16S-04G	16	12.0	30.0	30.0	50.0	31.5	20.0	PF 1/2
	DCF-20S-06G	20	16.0	36.0	36.0	56.0	34.5	22.0	PF 3/4
	DCF-25S-08G	25	20.0	46.0	41.0	62.0	37.5	24.5	PF 1
	DCF-30S-10G	30	25.0	50.0	55.0	69.0	42.0	26.5	PF 1 1/4
PB 315	DCF-38S-12G	38	32.0	60.0	60.0	74.0	43.5	28.5	PF 1 1/2

Metric Parallel Thread Type

Series	Part Number	Tube O.D.	Dimension						
			d	H	h	L	A	B	T
L Light PB 315	DCF-06L-M10	6	4.0	14.0	14.0	34.0	19.5	12.5	M10 x 1.0
	DCF-08L-M12	8	6.0	17.0	17.0	39.0	24.0	17.0	M12 x 1.5
	DCF-10L-M14	10	8.0	19.0	19.0	40.0	25.0	17.0	M14 x 1.5
	DCF-12L-M16	12	10.0	22.0	22.0	41.0	26.0	17.0	M16 x 1.5
	DCF-15L-M18	15	12.0	27.0	24.0	43.0	28.0	17.0	M18 x 1.5
	DCF-18L-M22	18	15.0	32.0	30.0	46.0	29.5	19.0	M22 x 1.5
PB 160	DCF-22L-M26	22	19.0	36.0	32.0	51.0	34.5	21.0	M26 x 1.5
	DCF-28L-M33	28	24.0	41.0	41.0	54.0	37.5	24.0	M33 x 2.0
	DCF-35L-M42	35	30.0	50.0	55.0	62.0	40.5	26.0	M42 x 2.0
	DCF-42L-M48	42	36.0	60.0	60.0	65.0	42.0	28.0	M48 x 2.0
S Heavy PB 630	DCF-06S-M12	6	4.0	17.0	17.0	41.0	26.0	17.0	M12 x 1.5
	DCF-08S-M14	8	5.0	19.0	19.0	41.0	26.0	17.0	M14 x 1.5
	DCF-10S-M16	10	7.0	22.0	22.0	43.0	26.5	17.0	M16 x 1.5
	DCF-12S-M18	12	8.0	24.0	24.0	44.0	27.5	17.0	M18 x 1.5
	DCF-14S-M20	14	10.0	27.0	27.0	49.0	31.0	19.0	M20 x 1.5
PB 400	DCF-16S-M22	16	12.0	30.0	30.0	49.0	30.5	19.0	M22 x 1.5
	DCF-20S-M27	20	16.0	36.0	36.0	56.0	34.5	22.0	M27 x 2.0
	DCF-25S-M33	25	20.0	46.0	41.0	61.0	37.0	24.0	M33 x 2.0
	DCF-30S-M42	30	25.0	50.0	55.0	68.0	41.5	26.0	M42 x 2.0
PB 315	DCF-38S-M48	38	32.0	60.0	60.0	74.0	43.0	28.0	M48 x 2.0

• All dimensions in millimeters unless specified as “inch”. Dimension are for reference only, subject to change
• Dimensions given approximate length with tightened nut.

DAE

Adjustable Elbow

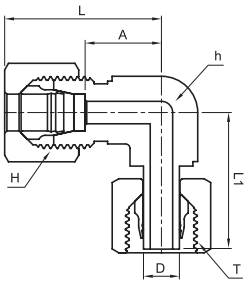

Series	Part Number	Tube O.D.	Dimension						
			D	H	h	L	L1	A	T
L Light PN 315	DAE- 06L	6	6	14.0	12.0	27.0	26.0	12.0	M12 x 1.5
	DAE -08L	8	8	17.0	12.0	29.0	27.5	14.0	M14 x 1.5
	DAE -10L	10	10	19.0	14.0	30.0	29.0	15.0	M16 x 1.5
	DAE -12L	12	12	22.0	17.0	32.0	29.5	17.0	M18 x 1.5
	DAE -15L	15	15	27.0	19.0	36.0	32.5	21.0	M22 x 1.5
	DAE -18L	18	18	32.0	24.0	40.0	35.5	23.5	M26 x 1.5
PN 160	DAE -22L	22	22	36.0	27.0	44.0	38.5	27.5	M30 x 2.0
	DAE -28L	28	28	41.0	36.0	47.0	41.5	30.5	M36 x 2.0
	DAE -35L	35	35	50.0	41.0	56.0	51.0	34.5	M45 x 2.0
	DAE -42L	42	42	60.0	50.0	63.0	56.0	40.0	M52 x 2.0
S Heavy PN 630	DAE -06S	6	6	17.0	12.0	31.0	27.0	16.0	M14 x 1.5
	DAE -08S	8	8	19.0	14.0	32.0	27.5	17.0	M16 x 1.5
	DAE -10S	10	10	22.0	17.0	34.0	30.0	17.5	M18 x 1.5
	DAE -12S	12	12	24.0	17.0	38.0	31.0	21.5	M20 x 1.5
	DAE -14S	14	14	27.0	19.0	40.0	35.0	22.0	M22 x 1.5
PN 400	DAE -16S	16	16	30.0	24.0	43.0	40.0	24.5	M24 x 1.5
	DAE -20S	20	20	36.0	27.0	48.0	44.5	26.5	M30 x 2.0
	DAE -25S	25	25	46.0	36.0	54.0	50.0	30.0	M36 x 2.0
	DAE -30S	30	30	50.0	41.0	62.0	55.0	35.5	M42 x 2.0
PN 315	DAE -38S	38	38	60.0	50.0	72.0	63.0	41.0	M52 x 2.0

DABT

Adjustable Branch Tee

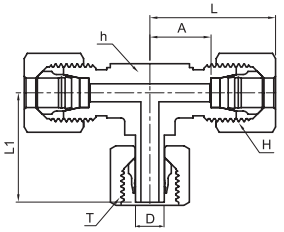

Series	Part Number	Tube O.D.	Dimension						
			D	H	h	L	L1	A	T
L Light PN 315	DABT -06L	6	6	14.0	12.0	27.0	26.0	12.0	M12 x 1.5
	DABT -08L	8	8	17.0	12.0	29.0	27.5	14.0	M14 x 1.5
	DABT -10L	10	10	19.0	14.0	30.0	29.0	15.0	M16 x 1.5
	DABT -12L	12	12	22.0	17.0	32.0	29.5	17.0	M18 x 1.5
	DABT -15L	15	15	27.0	19.0	36.0	32.5	21.0	M22 x 1.5
	DABT -18L	18	18	32.0	24.0	40.0	35.5	23.5	M26 x 1.5
PN 160	DABT -22L	22	22	36.0	27.0	44.0	38.5	27.5	M30 x 2.0
	DABT -28L	28	28	41.0	36.0	47.0	41.5	30.5	M36 x 2.0
	DABT -35L	35	35	50.0	41.0	56.0	51.0	34.5	M45 x 2.0
	DABT -42L	42	42	60.0	50.0	63.0	56.0	40.0	M52 x 2.0
S Heavy PN 630	DABT -06S	6	6	17.0	12.0	31.0	27.0	16.0	M14 x 1.5
	DABT -08S	8	8	19.0	14.0	32.0	27.5	17.0	M16 x 1.5
	DABT -10S	10	10	22.0	17.0	34.0	30.0	17.5	M18 x 1.5
	DABT -12S	12	12	24.0	17.0	38.0	31.0	21.5	M20 x 1.5
	DABT -14S	14	14	27.0	19.0	40.0	35.0	22.0	M22 x 1.5
PN 400	DABT -16S	16	16	30.0	24.0	43.0	40.0	24.5	M24 x 1.5
	DABT -20S	20	20	36.0	27.0	48.0	44.5	26.5	M30 x 2.0
	DABT -25S	25	25	46.0	36.0	54.0	50.0	30.0	M36 x 2.0
	DABT -30S	30	30	50.0	41.0	62.0	55.0	35.5	M42 x 2.0
PN 315	DABT -38S	38	38	60.0	50.0	72.0	63.0	41.0	M52 x 2.0

• All dimensions in millimeters unless specified as “inch”. Dimension are for reference only, subject to change
• Dimensions given approximate length with tightened nut.

DART

Adjustable Run Tee

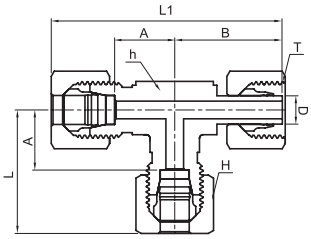

Series	Part Number	Tube O.D.	Dimension							
			D	H	h	L	L1	A	B	T
L Light PN 315	DART -06L	6	6	14.0	12.0	27.0	53.0	12.0	26.0	M12 x 1.5
	DART -08L	8	8	17.0	12.0	29.0	56.0	14.0	27.5	M14 x 1.5
	DART -10L	10	10	19.0	14.0	30.0	59.0	15.0	29.0	M16 x 1.5
	DART -12L	12	12	22.0	17.0	32.0	62.0	17.0	29.5	M18 x 1.5
	DART -15L	15	15	27.0	19.0	36.0	69.0	21.0	32.5	M22 x 1.5
	DART -18L	18	18	32.0	24.0	40.0	75.0	23.5	35.5	M26 x 1.5
PN 160	DART -22L	22	22	36.0	27.0	44.0	83.0	27.5	38.5	M30 x 2.0
	DART -28L	28	28	41.0	36.0	47.0	91.0	30.5	41.5	M36 x 2.0
	DART -35L	35	35	50.0	41.0	56.0	111.0	34.5	51.0	M45 x 2.0
	DART -42L	42	42	60.0	50.0	63.0	123.0	40.0	56.0	M52 x 2.0
S Heavy PN 630	DART -06S	6	6	17.0	12.0	31.0	58.0	16.0	27.0	M14 x 1.5
	DART -08S	8	8	19.0	14.0	32.0	61.0	17.0	27.5	M16 x 1.5
	DART -10S	10	10	22.0	17.0	34.0	66.0	17.5	30.0	M18 x 1.5
	DART -12S	12	12	24.0	17.0	38.0	71.0	21.5	31.0	M20 x 1.5
	DART -14S	14	14	27.0	19.0	40.0	75.0	22.0	35.0	M22 x 1.5
PN 400	DART -16S	16	16	30.0	24.0	43.0	79.0	24.5	40.0	M24 x 1.5
	DART -20S	20	20	36.0	27.0	48.0	93.0	26.5	44.5	M30 x 2.0
	DART -25S	25	25	46.0	36.0	54.0	105.0	30.0	50.0	M36 x 2.0
	DART -30S	30	30	50.0	41.0	62.0	119.0	35.5	55.0	M42 x 2.0
PN 315	DART -38S	38	38	60.0	50.0	72.0	138.0	41.0	63.0	M52 x 2.0

DSE

Swivel Adjustable Elbow

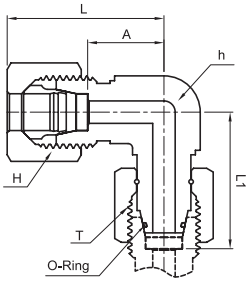

Series	Part Number	Tube O.D.	Dimension					
			H	h	L	L1	A	T
L Light PN 315	DSE- 06L	6	14.0	12.0	27.0	26.0	12.0	M12 x 1.5
	DSE -08L	8	17.0	12.0	29.0	27.5	14.0	M14 x 1.5
	DSE -10L	10	19.0	14.0	30.0	29.0	15.0	M16 x 1.5
	DSE -12L	12	22.0	17.0	32.0	29.5	17.0	M18 x 1.5
	DSE -15L	15	27.0	19.0	36.0	32.5	21.0	M22 x 1.5
	DSE -18L	18	32.0	24.0	40.0	35.5	23.5	M26 x 1.5
PN 160	DSE -22L	22	36.0	27.0	44.0	38.5	27.5	M30 x 2.0
	DSE -28L	28	41.0	36.0	47.0	41.5	30.5	M36 x 2.0
	DSE -35L	35	50.0	41.0	56.0	51.0	34.5	M45 x 2.0
	DSE -42L	42	60.0	50.0	63.0	56.0	40.0	M52 x 2.0
S Heavy PN 630	DSE -06S	6	17.0	12.0	31.0	27.0	16.0	M14 x 1.5
	DSE -08S	8	19.0	14.0	32.0	27.5	17.0	M16 x 1.5
	DSE -10S	10	22.0	17.0	34.0	30.0	17.5	M18 x 1.5
	DSE -12S	12	24.0	17.0	38.0	31.0	21.5	M20 x 1.5
	DSE -14S	14	27.0	19.0	40.0	35.0	22.0	M22 x 1.5
PN 400	DSE -16S	16	30.0	24.0	43.0	36.5	24.5	M24 x 1.5
	DSE -20S	20	36.0	27.0	48.0	44.5	26.5	M30 x 2.0
	DSE -25S	25	36.0	36.0	54.0	50.0	30.0	M36 x 2.0
	DSE -30S	30	50.0	41.0	62.0	55.0	35.5	M42 x 2.0
PN 315	DSE -38S	38	60.0	50.0	72.0	63.0	41.0	M52 x 2.0

• All dimensions in millimeters unless specified as “inch”. Dimension are for reference only, subject to change
• Dimensions given approximate length with tightened nut.

DSBT

Swivel Adjustable Branch Tee

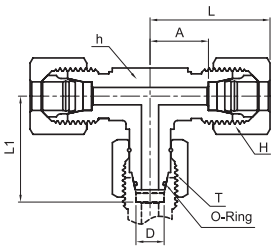

Series	Part Number	Tube O.D.	Dimension					
			H	h	L	L1	A	T
L Light PN 315	DSBT-06L	6	14.0	12.0	27.0	26.0	12.0	M12 x 1.5
	DSBT-08L	8	17.0	12.0	29.0	27.5	14.0	M14 x 1.5
	DSBT-10L	10	19.0	14.0	30.0	29.0	15.0	M16 x 1.5
	DSBT-12L	12	22.0	17.0	32.0	29.5	17.0	M18 x 1.5
	DSBT-15L	15	27.0	19.0	36.0	32.5	21.0	M22 x 1.5
	DSBT-18L	18	32.0	24.0	40.0	35.5	23.5	M26 x 1.5
PN 160	DSBT-22L	22	36.0	27.0	44.0	38.5	27.5	M30 x 2.0
	DSBT-28L	28	41.0	36.0	47.0	41.5	30.5	M36 x 2.0
	DSBT-35L	35	50.0	41.0	56.0	51.0	34.5	M45 x 2.0
	DSBT-42L	42	60.0	50.0	63.0	56.0	40.0	M52 x 2.0
S Heavy PN 630	DSBT-06S	6	17.0	12.0	31.0	27.0	16.0	M14 x 1.5
	DSBT-08S	8	19.0	14.0	32.0	27.5	17.0	M16 x 1.5
	DSBT-10S	10	22.0	17.0	34.0	30.0	17.5	M18 x 1.5
	DSBT-12S	12	24.0	17.0	38.0	31.0	21.5	M20 x 1.5
	DSBT-14S	14	27.0	19.0	40.0	35.0	22.0	M22 x 1.5
PN 400	DSBT-16S	16	30.0	24.0	43.0	36.5	24.5	M24 x 1.5
	DSBT-20S	20	36.0	27.0	48.0	44.5	26.5	M30 x 2.0
	DSBT-25S	25	46.0	36.0	54.0	50.0	30.0	M36 x 2.0
	DSBT-30S	30	50.0	41.0	62.0	55.0	35.5	M42 x 2.0
PN 315	DSBT-38S	38	60.0	50.0	72.0	63.0	41.0	M52 x 2.0

DSRT

Swivel Adjustable Run Tee

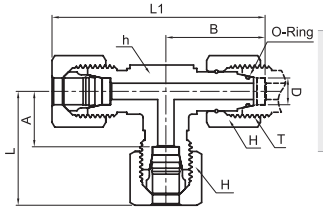

Series	Part Number	Tube O.D.	Dimension						
			H	h	L	L1	A	B	T
L Light PN 315	DSRT-06L	6	14.0	12.0	27.0	53.0	12.0	26.0	M12 x 1.5
	DSRT-08L	8	17.0	12.0	29.0	56.0	14.0	27.5	M14 x 1.5
	DSRT-10L	10	19.0	14.0	30.0	59.0	15.0	29.0	M16 x 1.5
	DSRT-12L	12	22.0	17.0	32.0	61.0	17.0	29.5	M18 x 1.5
	DSRT-15L	15	27.0	19.0	36.0	69.0	21.0	32.5	M22 x 1.5
	DSRT-18L	18	32.0	24.0	40.0	75.0	23.5	35.5	M26 x 1.5
PN 160	DSRT-22L	22	36.0	27.0	44.0	82.0	27.5	38.5	M30 x 2.0
	DSRT-28L	28	41.0	36.0	47.0	89.0	30.5	41.5	M36 x 2.0
	DSRT-35L	35	50.0	41.0	56.0	107.0	34.5	51.0	M45 x 2.0
	DSRT-42L	42	60.0	50.0	63.0	119.0	40.0	56.0	M52 x 2.0
S Heavy PN 630	DSRT-06S	6	17.0	12.0	31.0	58.0	16.0	27.0	M14 x 1.5
	DSRT-08S	8	19.0	14.0	32.0	59.0	17.0	27.5	M16 x 1.5
	DSRT-10S	10	22.0	17.0	34.0	64.0	17.5	30.0	M18 x 1.5
	DSRT-12S	12	24.0	17.0	38.0	69.0	21.5	31.0	M20 x 1.5
	DSRT-14S	14	27.0	19.0	40.0	75.0	22.0	35.0	M22 x 1.5
PN 400	DSRT-16S	16	30.0	24.0	43.0	79.0	24.5	36.5	M24 x 1.5
	DSRT-20S	20	36.0	27.0	48.0	93.0	26.5	44.5	M30 x 2.0
	DSRT-25S	25	46.0	36.0	54.0	104.0	30.0	50.0	M36 x 2.0
	DSRT-30S	30	50.0	41.0	62.0	117.0	35.5	55.0	M42 x 2.0
PN 315	DSRT-38S	38	60.0	50.0	72.0	135.0	41.0	63.0	M52 x 2.0

• All dimensions in millimeters unless specified as “inch”. Dimension are for reference only, subject to change
• Dimensions given approximate length with tightened nut.

DRD

Reducer

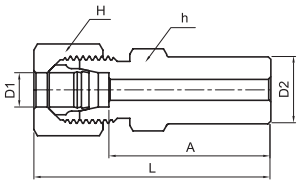

Series	Part Number	Tube O.D.		Dimension			
		D1	D2	H	h	L	A
L Light PN 315	DRD-06L-08L	6	8	14.0	12.0	40.0	25.5
	DRD-06L-10L	6	10	14.0	12.0	42.0	27.5
	DRD-08L-10L	8	10	17.0	14.0	43.0	27.5
	DRD-06L-12L	6	12	14.0	14.0	42.0	27.5
	DRD-08L-12L	8	12	17.0	14.0	43.0	27.5
	DRD-10L-12L	10	12	19.0	17.0	44.0	28.5
	DRD-06L-15L	6	15	14.0	19.0	44.0	29.0
	DRD-08L-15L	8	15	17.0	19.0	44.0	29.0
	DRD-10L-15L	10	15	19.0	19.0	45.0	30.0
	DRD-12L-15L	12	15	22.0	19.0	45.0	30.0
	DRD-06L-18L	6	18	14.0	19.0	46.0	31.0
	DRD-08L-18L	8	18	17.0	19.0	46.0	31.0
	DRD-10L-18L	10	18	19.0	19.0	47.0	32.0
	DRD-12L-18L	12	18	22.0	19.0	47.0	32.0
	DRD-15L-18L	15	18	27.0	22.0	49.0	33.0
PN 160	DRD-06L-22L	6	22	14.0	24.0	48.0	33.0
	DRD-08L-22L	8	22	17.0	24.0	48.0	33.0
	DRD-10L-22L	10	22	19.0	24.0	49.0	34.0
	DRD-12L-22L	12	22	22.0	24.0	49.0	34.0
	DRD-15L-22L	15	22	27.0	24.0	50.0	35.0
	DRD-18L-22L	18	22	32.0	27.0	51.0	34.5
	DRD-06L-28L	6	28	14.0	30.0	48.0	33.0
	DRD-08L-28L	8	28	17.0	30.0	48.0	33.0
	DRD-10L-28L	10	28	19.0	30.0	49.0	34.0
	DRD-12L-28L	12	28	22.0	30.0	49.0	34.0
	DRD-15L-28L	15	28	27.0	30.0	50.0	35.0
	DRD-18L-28L	18	28	32.0	30.0	51.0	36.0
	DRD-22L-28L	22	28	36.0	32.0	53.0	36.5
	DRD-06L-35L	6	35	14.0	36.0	53.0	38.5
	DRD-08L-35L	8	35	17.0	36.0	53.0	38.5
	DRD-10L-35L	10	35	19.0	36.0	55.0	39.5
	DRD-12L-35L	12	35	22.0	36.0	55.0	39.5
	DRD-15L-35L	15	35	27.0	36.0	56.0	40.5
	DRD-18L-35L	18	35	32.0	36.0	56.0	40.0
	DRD-22L-35L	22	35	36.0	36.0	58.0	42.0
	DRD-28L-35L	28	35	41.0	36.0	59.0	42.0
	DRD-06L-42L	6	42	14.0	46.0	56.0	41.0
	DRD-08L-42L	8	42	17.0	46.0	56.0	41.0
	DRD-10L-42L	10	42	19.0	46.0	58.0	42.0
	DRD-12L-42L	12	42	22.0	46.0	58.0	42.0
	DRD-15L-42L	15	42	27.0	46.0	60.0	43.0
	DRD-18L-42L	18	42	32.0	46.0	60.0	42.5
	DRD-22L-42L	22	42	36.0	46.0	62.0	44.5
	DRD-28L-42L	28	42	41.0	46.0	64.0	44.5
	DRD-35L-42L	35	42	50.0	46.0	67.0	43.5

• All dimensions in millimeters unless specified as “inch”. Dimension are for reference only, subject to change
• Dimensions given approximate length with tightened nut.

DRD

Reducer

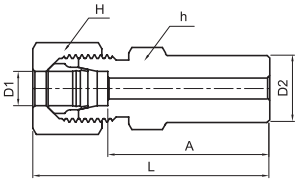

Series	Part Number	Tube O.D.		Dimension			
		D1	D2	H	h	L	A
S Heavy PN 630	DRD-06S-08S	6	8	17.0	14.0	43.0	28.0
	DRD-06S-10S	6	10	17.0	14.0	45.0	30.5
	DRD-08S-10S	8	10	19.0	17.0	45.0	30.5
	DRD-06S-12S	6	12	17.0	14.0	47.0	32.5
	DRD-08S-12S	8	12	19.0	17.0	47.0	32.5
	DRD-10S-12S	10	12	22.0	19.0	48.0	32.0
	DRD-06S-14S	6	14	17.0	17.0	51.0	36.5
	DRD-08S-14S	8	14	19.0	17.0	51.0	36.5
	DRD-10S-14S	10	14	22.0	19.0	52.0	36.0
	DRD-12S-14S	12	14	24.0	22.0	52.0	36.0
	DRD-06S-16S	6	16	17.0	17.0	53.0	38.5
	DRD-08S-16S	8	16	19.0	17.0	53.0	38.5
	DRD-10S-16S	10	16	22.0	19.0	54.0	38.0
	DRD-12S-16S	12	16	24.0	22.0	55.0	38.5
	DRD-14S-16S	14	16	27.0	22.0	57.0	39.5
PN 400	DRD-06S-20S	6	20	17.0	22.0	58.0	43.0
	DRD-08S-20S	8	20	19.0	22.0	58.0	43.0
	DRD-10S-20S	10	20	22.0	22.0	59.0	42.5
	DRD-12S-20S	12	20	24.0	22.0	59.0	42.5
	DRD-14S-20S	14	20	27.0	22.0	62.0	44.0
	DRD-16S-20S	16	20	30.0	24.0	62.0	43.5
	DRD-06S-25S	6	25	17.0	27.0	62.0	47.5
	DRD-08S-25S	8	25	19.0	27.0	62.0	47.5
	DRD-10S-25S	10	25	22.0	27.0	63.0	47.0
	DRD-12S-25S	12	25	24.0	27.0	63.0	47.0
	DRD-14S-25S	14	25	27.0	27.0	66.0	48.5
	DRD-16S-25S	16	25	30.0	27.0	66.0	48.0
	DRD-20S-25S	20	25	36.0	30.0	70.0	48.0
	DRD-06S-30S	6	30	17.0	32.0	67.0	52.0
	DRD-08S-30S	8	30	19.0	32.0	67.0	52.0
	DRD-10S-30S	10	30	22.0	32.0	68.0	51.5
	DRD-12S-30S	12	30	24.0	32.0	68.0	51.5
	DRD-14S-30S	14	30	27.0	32.0	71.0	53.0
	DRD-16S-30S	16	30	30.0	32.0	71.0	52.5
	DRD-20S-30S	20	30	36.0	32.0	74.0	52.5
	DRD-25S-30S	25	30	46.0	36.0	77.0	53.0
PN 315	DRD-06S-38S	6	38	17.0	41.0	72.0	57.0
	DRD-08S-38S	8	38	19.0	41.0	72.0	57.0
	DRD-10S-38S	10	38	22.0	41.0	73.0	56.5
	DRD-12S-38S	12	38	24.0	41.0	73.0	56.5
	DRD-14S-38S	14	38	27.0	41.0	76.0	58.0
	DRD-16S-38S	16	38	30.0	41.0	76.0	57.5
	DRD-20S-38S	20	38	36.0	41.0	79.0	57.5
	DRD-25S-38S	25	38	46.0	41.0	82.0	58.0
	DRD-30S-38S	30	38	50.0	46.0	89.0	58.5

• All dimensions in millimeters unless specified as “inch”. Dimension are for reference only, subject to change
• Dimensions given approximate length with tightened nut.

DSRAP

Swivel Reducing Adaptor

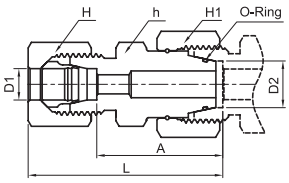

Series	Part Number	Tube O.D.			Dimension			
		D1	D2	H1	H	h	L	A
L Light PN 315	DSRAP-06L-08L	6	8	17.0	14.0	14.0	39.0	24.5
	DSRAP-06L-10L	6	10	19.0	14.0	17.0	39.5	24.5
	DSRAP-08L-10L	8	10	19.0	17.0	17.0	39.5	24.5
	DSRAP-06L-12L	6	12	22.0	14.0	17.0	40.0	25.0
	DSRAP-08L-12L	8	12	22.0	17.0	17.0	40.0	25.0
	DSRAP-10L-12L	10	12	22.0	19.0	17.0	41.0	26.0
	DSRAP-06L-15L	6	15	27.0	14.0	22.0	42.0	27.5
	DSRAP-08L-15L	8	15	27.0	17.0	22.0	42.0	27.5
	DSRAP-10L-15L	10	15	27.0	19.0	22.0	43.0	28.5
	DSRAP-12L-15L	12	15	27.0	22.0	22.0	43.0	28.5
	DSRAP-06L-18L	6	18	32.0	14.0	25.0	43.0	28.0
	DSRAP-08L-18L	8	18	32.0	17.0	25.0	43.0	28.0
	DSRAP-10L-18L	10	18	32.0	19.0	25.0	44.5	29.5
	DSRAP-12L-18L	12	18	32.0	22.0	25.0	44.5	29.5
	DSRAP-15L-18L	15	18	32.0	27.0	25.0	45.5	30.5
PN 160	DSRAP-06L-22L	6	22	36.0	14.0	28.5	47.0	32.0
	DSRAP-08L-22L	8	22	36.0	17.0	28.5	47.0	32.0
	DSRAP-10L-22L	10	22	36.0	19.0	28.5	48.0	33.0
	DSRAP-12L-22L	12	22	36.0	22.0	28.5	48.0	33.0
	DSRAP-15L-22L	15	22	36.0	27.0	28.5	49.0	34.0
	DSRAP-18L-22L	18	22	36.0	32.0	28.5	50.0	33.5
	DSRAP-06L-28L	6	28	41.0	14.0	36.0	49.0	34.0
	DSRAP-08L-28L	8	28	41.0	17.0	36.0	49.0	34.0
	DSRAP-10L-28L	10	28	41.0	19.0	36.0	50.0	35.0
	DSRAP-12L-28L	12	28	41.0	22.0	36.0	50.0	35.0
	DSRAP-15L-28L	15	28	41.0	27.0	36.0	51.0	36.0
	DSRAP-18L-28L	18	28	41.0	32.0	36.0	52.0	35.5
	DSRAP-22L-28L	22	28	41.0	36.0	36.0	54.0	37.5
	DSRAP-06L-35L	6	35	50.0	14.0	46.0	55.0	40.0
	DSRAP-08L-35L	8	35	50.0	17.0	46.0	55.0	40.0
	DSRAP-10L-35L	10	35	50.0	19.0	46.0	56.0	41.0
	DSRAP-12L-35L	12	35	50.0	22.0	46.0	56.0	41.0
	DSRAP-15L-35L	15	35	50.0	27.0	46.0	57.0	42.0
	DSRAP-18L-35L	18	35	50.0	32.0	46.0	58.0	41.5
	DSRAP-22L-35L	22	35	50.0	36.0	46.0	60.0	43.5
	DSRAP-28L-35L	28	35	50.0	41.0	46.0	60.0	43.5
	DSRAP-06L-42L	6	42	60.0	14.0	50.0	55.0	40.5
	DSRAP-08L-42L	8	42	60.0	17.0	50.0	55.0	40.5
	DSRAP-10L-42L	10	42	60.0	19.0	50.0	56.0	41.5
	DSRAP-12L-42L	12	42	60.0	22.0	50.0	56.0	41.5
	DSRAP-15L-42L	15	42	60.0	27.0	50.0	58.0	42.5
	DSRAP-18L-42L	18	42	60.0	32.0	50.0	58.0	42.0
	DSRAP-22L-42L	22	42	60.0	36.0	50.0	60.0	44.0
	DSRAP-28L-42L	28	42	60.0	41.0	50.0	61.0	44.0
	DSRAP-35L-42L	35	42	60.0	50.0	50.0	65.0	43.0

• All dimensions in millimeters unless specified as “inch”. Dimension are for reference only, subject to change
• Dimensions given approximate length with tightened nut.

DSRAP

Swivel Reducing Adaptor

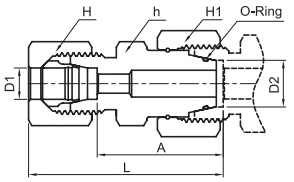

Series	Part Number	Tube O.D.			Dimension			
		D1	D2	H1	H	h	L	A
S Heavy PN 630	DSRAP-06S-08S	6	8	19.0	17.0	17.0	44.0	28.0
	DSRAP-06S-10S	6	10	22.0	17.0	17.0	44.0	29.5
	DSRAP-08S-10S	8	10	22.0	19.0	17.0	44.0	29.5
	DSRAP-06S-12S	6	12	24.0	17.0	19.0	45.0	30.0
	DSRAP-08S-12S	8	12	24.0	19.0	19.0	45.0	30.0
	DSRAP-10S-12S	10	12	24.0	22.0	19.0	46.0	29.5
	DSRAP-06S-14S	6	14	27.0	17.0	22.0	47.5	33.0
	DSRAP-08S-14S	8	14	27.0	19.0	22.0	47.5	33.0
	DSRAP-10S-14S	10	14	27.0	22.0	22.0	48.5	32.5
	DSRAP-12S-14S	12	14	27.0	24.0	22.0	48.5	32.5
	DSRAP-06S-16S	6	16	30.0	17.0	24.0	50.0	35.0
	DSRAP-08S-16S	8	16	30.0	19.0	24.0	50.0	35.0
	DSRAP-10S-16S	10	16	30.0	22.0	24.0	51.0	34.5
	DSRAP-12S-16S	12	16	30.0	24.0	24.0	51.0	34.5
	DSRAP-14S-16S	14	16	30.0	27.0	24.0	54.0	36.0
PN 400	DSRAP-06S-20S	6	20	36.0	17.0	28.5	54.0	39.0
	DSRAP-08S-20S	8	20	36.0	19.0	28.5	54.0	39.0
	DSRAP-10S-20S	10	20	36.0	22.0	28.5	55.0	38.5
	DSRAP-12S-20S	12	20	36.0	24.0	28.5	55.0	38.5
	DSRAP-14S-20S	14	20	36.0	27.0	28.5	58.0	40.0
	DSRAP-16S-20S	16	20	36.0	30.0	28.5	58.0	39.5
	DSRAP-06S-25S	6	25	46.0	17.0	36.0	58.0	43.5
	DSRAP-08S-25S	8	25	46.0	19.0	36.0	58.0	43.5
	DSRAP-10S-25S	10	25	46.0	22.0	36.0	59.0	43.0
	DSRAP-12S-25S	12	25	46.0	24.0	36.0	59.0	43.0
	DSRAP-14S-25S	14	25	46.0	27.0	36.0	62.0	44.5
	DSRAP-16S-25S	16	25	46.0	30.0	36.0	62.0	44.0
	DSRAP-20S-25S	20	25	46.0	36.0	36.0	66.0	44.0
	DSRAP-06S-30S	6	30	50.0	17.0	41.0	66.0	51.0
	DSRAP-08S-30S	8	30	50.0	19.0	41.0	66.0	51.0
	DSRAP-10S-30S	10	30	50.0	22.0	41.0	67.0	50.5
	DSRAP-12S-30S	12	30	50.0	24.0	41.0	67.0	50.5
	DSRAP-14S-30S	14	30	50.0	27.0	41.0	70.0	52.0
	DSRAP-16S-30S	16	30	50.0	30.0	41.0	70.0	51.5
	DSRAP-20S-30S	20	30	50.0	36.0	41.0	73.0	51.5
	DSRAP-25S-30S	25	30	50.0	46.0	41.0	76.0	52.0
PN 315	DSRAP-06S-38S	6	38	60.0	17.0	50.0	70.5	56.0
	DSRAP-08S-38S	8	38	60.0	19.0	50.0	70.5	56.0
	DSRAP-10S-38S	10	38	60.0	22.0	50.0	71.5	55.5
	DSRAP-12S-38S	12	38	60.0	24.0	50.0	71.5	55.5
	DSRAP-14S-38S	14	38	60.0	27.0	50.0	74.5	57.0
	DSRAP-16S-38S	16	38	60.0	30.0	50.0	74.5	56.5
	DSRAP-20S-38S	20	38	60.0	36.0	50.0	78.5	56.5
	DSRAP-25S-38S	25	38	60.0	46.0	50.0	81.5	57.0
	DSRAP-30S-38S	30	38	60.0	50.0	50.0	85.5	58.5

• All dimensions in millimeters unless specified as “inch”. Dimension are for reference only, subject to change
• Dimensions given approximate length with tightened nut.

DAP-GED/MED (BSP Parallel/Metric Parallel with ED-Ring)

Adaptor

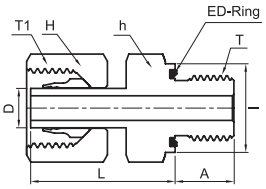

BSP Parallel Thread Type

Series	Part Number	Tube O.D.	Dimension						
			H	h	I	L	A	T	T1
L Light PN315	DAP-06L-01GED	6	14.0	14.0	14.0	24.5	8.0	PF 1/8	M12 x 1.5
	DAP-08L-02GED	8	17.0	19.0	19.0	29.5	12.0	PF 1/4	M14 x 1.5
	DAP-10L-02GED	10	19.0	19.0	19.0	27.5	12.0	PF 1/4	M16 x 1.5
	DAP-12L-03GED	12	22.0	22.0	22.0	34.0	12.0	PF 3/8	M18 x 1.5
	DAP-15L-04GED	15	27.0	27.0	27.0	32.0	14.0	PF 1/2	M22 x 1.5
	DAP-18L-04GED	18	32.0	27.0	27.0	31.5	14.0	PF 1/2	M26 x 1.5
PN 160	DAP-22L-06GED	22	36.0	32.0	32.0	32.5	16.0	PF 3/4	M30 x 2.0
	DAP-28L-08GED	28	41.0	41.0	40.0	35.0	18.0	PF 1	M36 x 2.0
	DAP-35L-10GED	35	50.0	50.0	50.0	42.5	20.0	PF 1 1/4	M45 x 2.0
	DAP-42L-12GED	42	60.0	55.0	55.0	46.5	22.0	PF 1 1/2	M52 x 2.0
S Heavy PB 630	DAP-06S-02GED	6	17.0	19.0	19.0	27.0	12.0	PF 1/4	M14 x 1.5
	DAP-08S-02GED	8	19.0	19.0	19.0	29.5	12.0	PF 1/4	M16 x 1.5
	DAP-10S-03GED	10	22.0	22.0	22.0	32.0	12.0	PF 3/8	M18 x 1.5
	DAP-12S-03GED	12	24.0	22.0	22.0	34.0	12.0	PF 3/8	M20 x 1.5
	DAP-12S-04GED	12	24.0	27.0	27.0	34.5	14.0	PF 1/2	M20 x 1.5
	DAP-14S-04GED	14	27.0	27.0	27.0	36.5	14.0	PF 1/2	M22 x 1.5
PN 400	DAP-16S-04GED	16	30.0	27.0	27.0	37.0	14.0	PF 1/2	M24 x 1.5
	DAP-16S-06GED	16	30.0	32.0	32.0	39.0	16.0	PF 3/4	M24 x 1.5
	DAP-20S-06GED	20	36.0	32.0	32.0	43.0	16.0	PF 3/4	M30 x 2.0
	DAP-25S-08GED	25	46.0	41.0	40.0	48.0	18.0	PF 1	M36 x 2.0
	DAP-30S-10GED	30	50.0	50.0	50.0	51.0	20.0	PF 1 1/4	M42 x 2.0
PN 315	DAP-38S-12GED	38	60.0	55.0	55.0	60.0	22.0	PF 1 1/2	M52 x 2.0

Metric Parallel Thread Type

Series	Part Number	Tube O.D.	Dimension (mm)						
			H	h	I	L	A	T	T1
L Light PN315	DAP-06L-M10ED	6	14.0	14.0	14.0	24.5	8.0	M10 x 1.0	M12 x 1.5
	DAP-08L-M12ED	8	17.0	17.0	17.0	26.5	12.0	M12 x 1.5	M14 x 1.5
	DAP-10L-M14ED	10	19.0	19.0	19.0	27.5	12.0	M14 x 1.5	M16 x 1.5
	DAP-12L-M16ED	12	22.0	22.0	22.0	30.5	12.0	M16 x 1.5	M18 x 1.5
	DAP-15L-M18ED	15	27.0	24.0	24.0	31.5	14.0	M18 x 1.5	M22 x 1.5
	DAP-18L-M22ED	18	32.0	27.0	27.0	31.5	14.0	M22 x 1.5	M26 x 1.5
PN 160	DAP-22L-M26ED	22	36.0	32.0	32.0	32.5	16.0	M26 x 1.5	M30 x 2.0
	DAP-28L-M33ED	28	41.0	41.0	40.0	35.0	18.0	M33 x 2.0	M36 x 2.0
	DAP-35L-M42ED	35	50.0	50.0	50.0	42.5	20.0	M42 x 2.0	M45 x 2.0
	DAP-42L-M48ED	42	60.0	55.0	55.0	46.5	22.0	M48 x 2.0	M52 x 2.0
S Heavy PB 630	DAP-06S-M12ED	6	17.0	17.0	17.0	27.0	12.0	M12 x 1.5	M14 x 1.5
	DAP-08S-M14ED	8	19.0	19.0	19.0	29.5	12.0	M14 x 1.5	M16 x 1.5
	DAP-10S-M16ED	10	22.0	22.0	22.0	32.0	12.0	M16 x 1.5	M18 x 1.5
	DAP-12S-M18ED	12	24.0	24.0	24.0	34.0	12.0	M18 x 1.5	M20 x 1.5
	DAP-14S-M20ED	14	27.0	27.0	27.0	36.5	14.0	M20 x 1.5	M22 x 1.5
PN 400	DAP-16S-M22ED	16	30.0	27.0	27.0	37.0	14.0	M22 x 1.5	M24 x 1.5
	DAP-20S-M27ED	20	36.0	32.0	32.0	43.0	16.0	M27 x 2.0	M30 x 2.0
	DAP-25S-M33ED	25	46.0	41.0	40.0	48.0	18.0	M33 x 2.0	M36 x 2.0
	DAP-30S-M42ED	30	50.0	50.0	50.0	51.0	20.0	M42 x 2.0	M42 x 2.0
PN 315	DAP-38S-M48ED	38	60.0	55.0	55.0	60.0	22.0	M48 x 2.0	M52 x 2.0

• All dimensions in millimeters unless specified as “inch”. Dimension are for reference only, subject to change
• Dimensions given approximate length with tightened nut.

DSAP-GED/MED (BSP Parallel/Metric Parallel with ED-Ring)

Swivel Adaptor

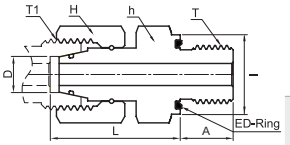

BSP Parallel Thread Type

Series	Part Number	Tube O.D.	Dimension						
			H	h	I	L	A	T	T1
L Light PN315	DSAP-06L-01GED	6	14.0	14.0	14.0	24.5	8.0	PF 1/8	M12 x 1.5
	DSAP-08L-02GED	8	17.0	19.0	19.0	29.5	12.0	PF 1/4	M14 x 1.5
	DSAP-10L-02GED	10	19.0	19.0	19.0	27.5	12.0	PF 1/4	M16 x 1.5
	DSAP-12L-03GED	12	22.0	22.0	22.0	34.0	12.0	PF 3/8	M18 x 1.5
	DSAP-15L-04GED	15	27.0	27.0	27.0	32.0	14.0	PF 1/2	M22 x 1.5
	DSAP-18L-04GED	18	32.0	27.0	27.0	31.5	14.0	PF 1/2	M26 x 1.5
PN 160	DSAP-22L-06GED	22	36.0	32.0	32.0	32.5	16.0	PF 3/4	M30 x 2.0
	DSAP-28L-08GED	28	41.0	41.0	40.0	35.0	18.0	PF 1	M36 x 2.0
	DSAP-35L-10GED	35	50.0	50.0	50.0	42.5	20.0	PF 1 1/4	M45 x 2.0
	DSAP-42L-12GED	42	60.0	55.0	55.0	46.5	22.0	PF 1 1/2	M52 x 2.0
S Heavy PB 630	DSAP-06S-02GED	6	17.0	19.0	19.0	27.0	12.0	PF 1/4	M14 x 1.5
	DSAP-08S-02GED	8	19.0	19.0	19.0	29.5	12.0	PF 1/4	M16 x 1.5
	DSAP-10S-03GED	10	22.0	22.0	22.0	32.0	12.0	PF 3/8	M18 x 1.5
	DSAP-12S-03GED	12	24.0	22.0	22.0	34.0	12.0	PF 3/8	M20 x 1.5
	DSAP-14S-04GED	14	27.0	27.0	27.0	36.5	14.0	PF 1/2	M22 x 1.5
PN 400	DSAP-16S-04GED	16	30.0	27.0	27.0	37.0	14.0	PF 1/2	M24 x 1.5
	DSAP-20S-06GED	20	36.0	32.0	32.0	43.0	16.0	PF 3/4	M30 x 2.0
	DSAP-25S-08GED	25	46.0	41.0	40.0	48.0	18.0	PF 1	M36 x 2.0
	DSAP-30S-10GED	30	50.0	50.0	50.0	51.0	20.0	PF 1 1/4	M42 x 2.0
PN 315	DSAP-38S-12GED	38	60.0	55.0	55.0	60.0	22.0	PF 1 1/2	M52 x 2.0

Metric Parallel Thread Type

Series	Part Number	Tube O.D.	Dimension						
			H	h	I	L	A	T	T1
L Light PN315	DSAP-06L-M10ED	6	14.0	14.0	14.0	24.5	8.0	M10 x 1.0	M12 x 1.5
	DSAP-08L-M12ED	8	17.0	19.0	17.0	26.5	12.0	M12 x 1.5	M14 x 1.5
	DSAP-10L-M14ED	10	19.0	19.0	19.0	27.5	12.0	M14 x 1.5	M16 x 1.5
	DSAP-12L-M16ED	12	22.0	22.0	22.0	30.5	12.0	M16 x 1.5	M18 x 1.5
	DSAP-15L-M18ED	15	27.0	24.0	24.0	31.5	12.0	M18 x 1.5	M22 x 1.5
	DSAP-18L-M22ED	18	32.0	27.0	27.0	31.5	14.0	M22 x 1.5	M26 x 1.5
PN 160	DSAP-22L-M26ED	22	36.0	32.0	32.0	32.5	16.0	M26 x 1.5	M30 x 2.0
	DSAP-28L-M33ED	28	41.0	41.0	40.0	35.0	18.0	M33 x 2.0	M36 x 2.0
	DSAP-35L-M42ED	35	50.0	50.0	50.0	42.5	20.0	M42 x 2.0	M45 x 2.0
	DSAP-42L-M48ED	42	60.0	55.0	55.0	46.5	22.0	M48 x 2.0	M52 x 2.0
S Heavy PB 630	DSAP-06S-M12ED	6	17.0	17.0	17.0	27.0	12.0	M12 x 1.5	M14 x 1.5
	DSAP-08S-M14ED	8	19.0	19.0	19.0	29.5	12.0	M14 x 1.5	M16 x 1.5
	DSAP-10S-M16ED	10	22.0	22.0	22.0	32.0	12.0	M16 x 1.5	M18 x 1.5
	DSAP-12S-M18ED	12	24.0	24.0	24.0	34.0	12.0	M18 x 1.5	M20 x 1.5
	DSAP-14S-M20ED	14	27.0	27.0	26.0	36.5	14.0	M20 x 1.5	M22 x 1.5
PN 400	DSAP-16S-M22ED	16	30.0	27.0	27.0	37.0	14.0	M22 x 1.5	M24 x 1.5
	DSAP-20S-M27ED	20	36.0	32.0	32.0	43.0	16.0	M27 x 2.0	M30 x 2.0
	DSAP-25S-M33ED	25	46.0	41.0	40.0	48.0	18.0	M33 x 2.0	M36 x 2.0
	DSAP-30S-M42ED	30	50.0	50.0	50.0	51.0	20.0	M42 x 2.0	M45 x 2.0
PN 315	DSAP-38S-M48ED	38	60.0	55.0	55.0	60.0	22.0	M48 x 2.0	M52 x 2.0

• All dimensions in millimeters unless specified as “inch”. Dimension are for reference only, subject to change
• Dimensions given approximate length with tightened nut.

DSLU

Swivel Union

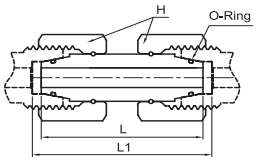

Series	Part Number	Tube O.D.	Dimension		
			H	L	L1
L Light PN500	DSLU-06L	6	17.0	34.0	36.0
	DSLU-08L	8	17.0	34.0	36.0
	DSLU-10L	10	19.0	36.0	37.0
PB 400	DSLU-12L	12	22.0	36.0	37.0
	DSLU-15L	15	27.0	39.0	40.0
	DSLU-18L	18	32.0	40.5	42.5
PB 250	DSLU-22L	22	36.0	45.0	47.0
	DSLU-28L	28	46.0	47.0	49.0
	DSLU-35L	35	50.0	53.0	58.0
	DSLU-42L	42	60.0	53.0	59.0
S Heavy PB 800	DSLU-06S	6	17.0	37.0	39.0
	DSLU-08S	8	19.0	37.0	39.0
	DSLU-10S	10	22.0	41.0	43.0
PN 630	DSLU-12S	12	24.0	43.0	44.0
	DSLU-14S	14	27.0	45.0	48.0
	DSLU-16S	16	30.0	46.0	50.0
PN 400	DSLU-20S	20	36.0	55.0	60.0
	DSLU-25S	25	46.0	58.0	66.0
	DSLU-30S	30	50.0	62.0	73.0
	DSLU-38S	38	60.0	67.0	83.0

• All dimensions in millimeters unless specified as “inch”. Dimension are for reference only, subject to change
• Dimensions given approximate length with tightened nut.

DBE-G/M (BSP Parallel/Metric Parallel)

Banjo Elbow

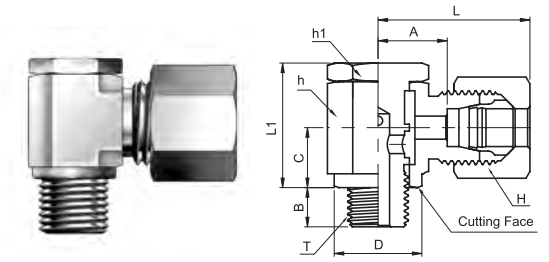

For Tube O.D. up to 15mm

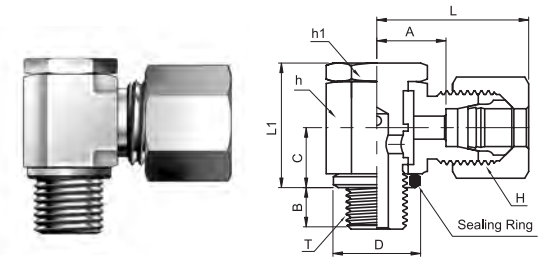

For Tube O.D. 16mm and larger

BSP Parallel Thread Type

Series	Part Number	Tube O.D.	Dimension									
			D	H	h	h1	L	L1	A	B	C	T
L Light PB 250	DBE-06L-01G	6	14.0	14.0	14.0	14.0	25.0	21.0	10.5	6.0	10.0	PF 1/8
	DBE-08L-02G	8	18.0	17.0	19.0	19.0	28.0	27.0	13.0	9.0	13.0	PF 1/4
	DBE-10L-02G	10	18.0	19.0	19.0	19.0	29.0	27.0	14.0	9.0	13.0	PF 1/4
	DBE-12L-03G	12	22.0	22.0	22.0	22.0	30.0	32.0	15.5	9.0	15.0	PF 3/8
	DBE-15L-04G	15	26.0	27.0	27.0	27.0	34.0	37.5	19.0	11.0	18.0	PF 1/2
PB 160	DBE-18L-04G	18	26.0	32.0	30.0	27.0	37.0	44.0	20.5	11.0	21.5	PF 1/2
	DBE-22L-06G	22	32.0	36.0	36.0	32.0	42.0	49.0	25.5	13.0	24.0	PF 3/4
S Heavy PB 250	DBE-06S-02G	6	18.0	17.0	19.0	19.0	30.0	27.0	15.0	9.0	13.0	PF 1/4
	DBE-08S-02G	8	18.0	19.0	19.0	19.0	30.0	27.0	15.0	9.0	13.0	PF 1/4
	DBE-10S-03G	10	22.0	22.0	22.0	22.0	32.0	32.0	16.0	9.0	15.0	PF 3/8
	DBE-12S-03G	12	22.0	24.0	24.0	24.0	33.0	37.0	17.0	9.0	18.0	PF 3/8
	DBE-14S-04G	14	26.0	27.0	27.0	27.0	38.0	37.0	20.0	11.0	18.0	PF 1/2
PB 160	DBE-16S-04G	16	26.0	30.0	30.0	27.0	40.0	44.0	21.5	11.0	21.5	PF 1/2
	DBE-20S-06G	20	32.0	36.0	36.0	32.0	46.0	49.0	24.5	13.0	24.0	PF 3/4

Metric Parallel Thread Type

Series	Part Number	Tube O.D.	Dimension									
			D	H	h	h1	L	L1	A	B	C	T
L Light PB 250	DBE-06L-M10	6	14.0	14.0	14.0	14.0	25.0	21.5	10.5	6.0	10.0	M10 x 1.0
	DBE-08L-M12	8	17.0	17.0	17.0	17.0	27.0	25.0	12.0	9.0	12.0	M12 x 1.5
	DBE-10L-M14	10	19.0	19.0	19.0	19.0	29.0	27.0	14.0	9.0	13.0	M14 x 1.5
	DBE-12L-M16	12	21.0	22.0	22.0	22.0	30.0	32.0	15.5	9.0	15.0	M16 x 1.5
	DBE-15L-M18	15	23.0	27.0	24.0	24.0	33.0	37.5	17.5	9.0	18.0	M18 x 1.5
PB 160	DBE-18L-M22	18	27.0	32.0	30.0	27.0	37.0	44.0	20.5	11.0	21.5	M22 x 1.5
	DBE-22L-M26	22	31.0	36.0	36.0	32.0	42.0	49.0	25.5	13.0	24.0	M26 x 1.5
S Heavy PB 250	DBE-06S-M12	6	17.0	17.0	17.0	17.0	29.0	25.0	14.0	9.0	12.0	M12 x 1.5
	DBE-08S-M14	8	19.0	19.0	19.0	19.0	30.0	27.0	15.0	9.0	13.0	M14 x 1.5
	DBE-10S-M16	10	21.0	22.0	22.0	22.0	32.0	32.0	16.0	9.0	15.0	M16 x 1.5
	DBE-12S-M18	12	23.0	24.0	24.0	24.0	33.0	37.0	17.0	9.0	18.0	M18 x 1.5
	DBE-14S-M20	14	25.0	27.0	27.0	27.0	38.0	37.0	20.0	11.0	18.0	M20 x 1.5
PB 160	DBE-16S-M22	16	27.0	30.0	30.0	27.0	40.0	44.0	21.5	11.0	21.5	M22 x 1.5
	DBE-20S-M27	20	32.0	36.0	36.0	32.0	46.0	49.0	24.5	13.0	24.0	M27 x 2.0

• All dimensions in millimeters unless specified as “inch”. Dimension are for reference only, subject to change
• Dimensions given approximate length with tightened nut.

DHBE-G/M (BSP Parallel/Metric Parallel)

High Pressure Banjo Elbow

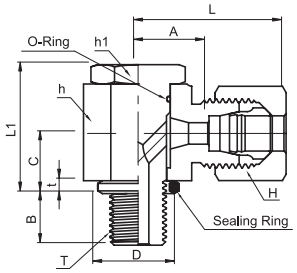

BSP Parallel Thread Type

Series	Part Number	Tube O.D.	Dimension										
			D	H	h	h1	L	L1	A	B	C	t	T
L Light PB 315	DHBE-06L-01G	6	14.0	14.0	17.0	17.0	27.0	24.0	12.0	8.0	10.5	2.5	PF 1/8
	DHBE-08L-02G	8	18.0	17.0	22.0	19.0	29.0	30.0	14.5	12.0	14.0	3.0	PF 1/4
	DHBE-10L-02G	10	18.0	19.0	22.0	19.0	30.0	30.0	15.5	12.0	14.0	3.0	PF 1/4
	DHBE-12L-03G	12	22.0	22.0	27.0	24.0	33.0	36.0	18.0	12.0	16.5	3.0	PF 3/8
	DHBE-15L-04G	15	26.0	27.0	32.0	30.0	37.0	45.0	21.5	14.0	21.5	4.5	PF 1/2
	DHBE-18L-04G	18	26.0	32.0	32.0	30.0	37.0	45.0	21.0	14.0	21.5	4.5	PF 1/2
PB 160	DHBE-22L-06G	22	32.0	36.0	41.0	36.0	44.0	53.0	27.5	16.0	24.0	3.5	PF 3/4
	DHBE-28L-08G	28	39.0	41.0	50.0	46.0	49.0	66.0	32.0	18.0	30.5	3.5	PF 1
	DHBE-35L-10G	35	49.0	50.0	60.0	55.0	58.0	76.0	36.0	20.0	35.5	3.5	PF 1 1/4
	DHBE-42L-12G	42	55.0	60.0	70.0	60.0	63.0	87.0	40.5	22.0	40.5	3.5	PF 1 1/2
S Heavy PB 400	DHBE-06S-02G	6	18.0	17.0	22.0	19.0	31.0	30.0	16.5	12.0	14.0	3.0	PF 1/4
	DHBE-08S-02G	8	18.0	19.0	22.0	19.0	31.0	30.0	16.5	12.0	14.0	3.0	PF 1/4
	DHBE-10S-03G	10	22.0	22.0	27.0	24.0	35.0	36.0	18.5	12.0	16.5	3.0	PF 3/8
	DHBE-12S-03G	12	22.0	24.0	27.0	24.0	35.0	36.0	18.5	12.0	16.5	3.0	PF 3/8
	DHBE-16S-04G	16	26.0	30.0	32.0	30.0	40.0	45.0	22.0	14.0	21.5	4.5	PF 1/2
	DHBE-20S-06G	20	32.0	36.0	41.0	36.0	48.0	53.0	26.5	16.0	24.0	3.5	PF 3/4
PB 250	DHBE-25S-08G	25	39.0	46.0	50.0	46.0	56.0	66.0	31.5	18.0	30.5	3.5	PF 1
	DHBE-30S-10G	30	49.0	50.0	60.0	55.0	64.0	76.0	37.0	20.0	34.5	3.5	PF 1 1/4
	DHBE-38S-12G	38	55.0	60.0	70.0	60.0	72.0	87.0	41.5	22.0	40.5	3.5	PF 1 1/2

Metric Parallel Thread Type

Series	Part Number	Tube O.D.	Dimension										
			D	H	h	h1	L	L1	A	B	C	t	T
L Light PB 315	DHBE-06L-M10	6	14.0	14.0	17.0	17.0	27.0	24.0	12.0	8.0	10.5	2.5	M10 x 1.0
	DHBE-08L-M12	8	17.0	17.0	22.0	19.0	29.0	30.0	14.5	12.0	14.0	3.0	M12 x 1.5
	DHBE-10L-M14	10	19.0	19.0	22.0	19.0	30.0	30.0	15.5	12.0	14.0	3.0	M14 x 1.5
	DHBE-12L-M16	12	21.0	22.0	27.0	24.0	33.0	36.0	18.0	12.0	16.5	3.0	M16 x 1.5
	DHBE-15L-M18	15	23.0	27.0	30.0	27.0	36.0	39.5	20.5	12.0	18.5	3.0	M18 x 1.5
	DHBE-18L-M22	18	27.0	32.0	32.0	30.0	37.0	45.0	21.0	14.0	21.5	4.5	M22 x 1.5
PB 160	DHBE-22L-M26	22	31.0	36.0	41.0	36.0	44.0	53.0	27.5	16.0	24.0	3.5	M26 x 1.5
	DHBE-28L-M33	28	39.0	41.0	50.0	46.0	49.0	66.0	32.0	18.0	30.5	3.5	M33 x 2.0
	DHBE-35L-M42	35	49.0	50.0	60.0	55.0	58.0	76.0	36.0	20.0	35.5	3.5	M42 x 2.0
	DHBE-42L-M48	42	55.0	60.0	70.0	60.0	63.0	87.0	40.5	22.0	40.5	3.5	M48 x 2.0
S Heavy PB 400	DHBE-06S-M12	6	17.0	17.0	22.0	19.0	31.0	30.0	16.5	12.0	14.0	3.0	M12 x 1.5
	DHBE-08S-M14	8	19.0	19.0	22.0	19.0	31.0	30.0	16.5	12.0	14.0	3.0	M14 x 1.5
	DHBE-10S-M16	10	21.0	22.0	27.0	24.0	35.0	36.0	18.5	12.0	16.5	3.0	M16 x 1.5
	DHBE-12S-M18	12	23.0	24.0	30.0	27.0	36.0	39.5	20.0	12.0	18.5	3.0	M18 x 1.5
	DHBE-16S-M22	16	27.0	30.0	32.0	30.0	40.0	45.0	22.0	14.0	21.5	4.5	M22 x 1.5
	DHBE-20S-M27	20	32.0	36.0	41.0	36.0	48.0	53.0	26.5	16.0	24.0	3.5	M27 x 2.0
PB 160	DHBE-25S-M33	25	39.0	46.0	50.0	46.0	56.0	66.0	31.5	18.0	30.5	3.5	M33 x 2.0
	DHBE-30S-M42	30	49.0	50.0	60.0	55.0	64.0	76.0	37.0	20.0	35.5	3.5	M42 x 2.0
	DHBE-38S-M48	38	55.0	60.0	70.0	60.0	72.0	87.0	41.5	22.0	40.5	3.5	M48 x 2.0

• All dimensions in millimeters unless specified as “inch”. Dimension are for reference only, subject to change
• Dimensions given approximate length with tightened nut.

DHBT-G/M (BSP Parallel/Metric Parallel)

High Pressure Banjo Tee

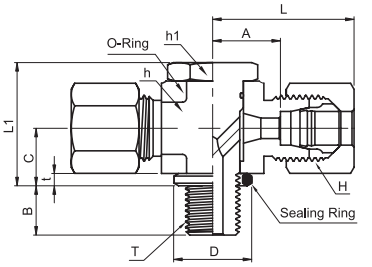

BSP Parallel Thread Type

Series	Part Number	Tube O.D.	Dimension										
			D	H	h	h1	L	L1	A	B	C	t	T
L Light PB 315	DHBT-06L-01G	6	14.0	14.0	17.0	17.0	27.0	24.0	12.0	8.0	10.5	2.5	PF 1/8
	DHBT-08L-02G	8	18.0	17.0	22.0	19.0	29.0	30.0	14.5	12.0	14.0	3.0	PF 1/4
	DHBT-10L-02G	10	18.0	19.0	22.0	19.0	30.0	30.0	15.5	12.0	14.0	3.0	PF 1/4
	DHBT-12L-03G	12	22.0	22.0	27.0	24.0	33.0	36.0	18.0	12.0	16.5	3.0	PF 3/8
	DHBT-15L-04G	15	26.0	27.0	32.0	30.0	37.0	45.0	21.5	14.0	21.5	4.5	PF 1/2
	DHBT-18L-04G	18	26.0	32.0	32.0	30.0	37.0	45.0	21.0	14.0	21.5	4.5	PF 1/2
PB 160	DHBT-22L-06G	22	32.0	36.0	41.0	36.0	44.0	53.0	27.5	16.0	24.0	3.5	PF 3/4
	DHBT-28L-08G	28	39.0	41.0	50.0	46.0	49.0	66.0	32.0	18.0	30.5	3.5	PF 1
	DHBT-35L-10G	35	49.0	50.0	60.0	55.0	58.0	76.0	36.0	20.0	35.5	3.5	PF 1 1/4
	DHBT-42L-12G	42	55.0	60.0	70.0	60.0	63.0	87.0	40.5	22.0	40.5	3.5	PF 1 1/2
S Heavy PB 400	DHBT-06S-02G	6	18.0	17.0	22.0	19.0	31.0	30.0	16.5	12.0	14.0	3.0	PF 1/4
	DHBT-08S-02G	8	18.0	19.0	22.0	19.0	31.0	30.0	16.5	12.0	14.0	3.0	PF 1/4
	DHBT-10S-03G	10	22.0	22.0	27.0	24.0	35.0	36.0	18.5	12.0	16.5	3.0	PF 3/8
	DHBT-12S-03G	12	22.0	24.0	27.0	24.0	35.0	36.0	18.5	12.0	16.5	3.0	PF 3/8
	DHBT-16S-04G	16	26.0	30.0	32.0	30.0	40.0	45.0	22.0	14.0	21.5	4.5	PF 1/2
	DHBT-20S-06G	20	32.0	36.0	41.0	36.0	48.0	53.0	26.5	16.0	24.0	3.5	PF 3/4
PB 250	DHBT-25S-08G	25	39.0	46.0	50.0	46.0	56.0	66.0	31.5	18.0	30.5	3.5	PF 1
	DHBT-30S-10G	30	49.0	50.0	60.0	55.0	64.0	76.0	37.0	20.0	35.5	3.5	PF 1 1/4
	DHBT-38S-12G	38	55.0	60.0	70.0	60.0	72.0	87.0	41.5	22.0	40.5	3.5	PF 1 1/2

Metric Parallel Thread Type

Series	Part Number	Tube O.D.	Dimension										
			D	H	h	h1	L	L1	A	B	C	t	T
L Light PB 315	DHBT-06L-M10	6	14.0	14.0	17.0	17.0	27.0	24.0	12.0	8.0	10.5	2.5	M10 x 1.0
	DHBT-08L-M12	8	17.0	17.0	22.0	19.0	29.0	30.0	14.5	12.0	14.0	3.0	M12 x 1.5
	DHBT-10L-M14	10	19.0	19.0	22.0	19.0	30.0	30.0	15.5	12.0	14.0	3.0	M14 x 1.5
	DHBT-12L-M16	12	21.0	22.0	27.0	24.0	33.0	36.0	18.0	12.0	16.5	3.0	M16 x 1.5
	DHBT-15L-M18	15	23.0	27.0	30.0	27.0	36.0	39.5	20.5	12.0	18.5	3.0	M18 x 1.5
	DHBT-18L-M22	18	27.0	32.0	32.0	30.0	37.0	45.0	21.0	14.0	21.5	4.5	M22 x 1.5
PB 160	DHBT-22L-M26	22	31.0	36.0	41.0	36.0	44.0	53.0	27.5	16.0	24.0	3.5	M26 x 1.5
	DHBT-28L-M33	28	39.0	41.0	50.0	46.0	49.0	66.0	32.0	18.0	30.5	3.5	M33 x 2.0
	DHBT-35L-M42	35	49.0	50.0	60.0	55.0	58.0	76.0	36.0	20.0	35.5	3.5	M42 x 2.0
	DHBT-42L-M48	42	55.0	60.0	70.0	60.0	63.0	87.0	40.5	22.0	40.5	3.5	M48 x 2.0
S Heavy PB 400	DHBT-06S-M12	6	17.0	17.0	22.0	19.0	31.0	30.0	16.5	12.0	14.0	3.0	M12 x 1.5
	DHBT-08S-M14	8	19.0	19.0	22.0	19.0	31.0	30.0	16.5	12.0	14.0	3.0	M14 x 1.5
	DHBT-10S-M16	10	21.0	22.0	27.0	24.0	35.0	36.0	18.5	12.0	16.5	3.0	M16 x 1.5
	DHBT-12S-M18	12	23.0	24.0	30.0	27.0	36.0	39.5	20.0	12.0	18.5	3.0	M18 x 1.5
	DHBT-16S-M22	16	27.0	30.0	32.0	30.0	40.0	45.0	22.0	14.0	21.5	4.5	M22 x 1.5
	DHBT-20S-M27	20	32.0	36.0	41.0	36.0	48.0	53.0	26.5	16.0	24.0	3.5	M27 x 2.0
PB 250	DHBT-25S-M33	25	39.0	46.0	50.0	46.0	56.0	66.0	31.5	18.0	30.5	3.5	M33 x 2.0
	DHBT-30S-M42	30	49.0	50.0	60.0	55.0	64.0	76.0	37.0	20.0	35.5	3.5	M42 x 2.0
	DHBT-38S-M48	38	55.0	60.0	70.0	60.0	72.0	87.0	41.5	22.0	40.5	3.5	M48 x 2.0

• All dimensions in millimeters unless specified as “inch”. Dimension are for reference only, subject to change
• Dimensions given approximate length with tightened nut.

DFGC-G (BSP Parallel)

Pressure Gauge Connector

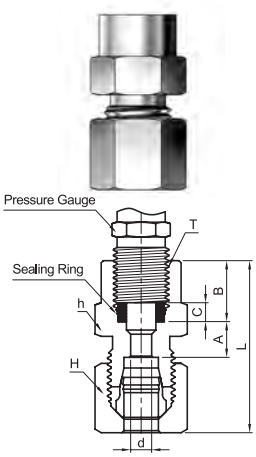

Series	Part Number	Tube O.D.	Dimension							
			d	H	h	L	A	B	C	T
L Light PN 315	DFGC-06L-02G	6	2.5	14.0	19.0	37.0	7.5	14.5	4.5	PF 1/4
	DFGC-08L-02G	8	5.5	17.0	19.0	37.0	7.5	14.5	4.5	PF 1/4
	DFGC-10L-02G	10	5.5	19.0	19.0	38.0	8.5	14.5	4.5	PF 1/4
	DFGC-12L-02G	12	5.5	22.0	19.0	38.0	8.5	14.5	4.5	PF 1/4
S Heavy PN 630	DFGC-06S-04G	6	3.5	17.0	27.0	46.0	11.0	20.0	5.0	PF 1/2
	DFGC-08S-04G	8	3.5	19.0	27.0	46.0	11.0	20.0	5.0	PF 1/2
	DFGC-10S-04G	10	7.0	22.0	27.0	47.0	10.5	20.0	5.0	PF 1/2
	DFGC-12S-04G	12	7.0	24.0	27.0	47.0	10.5	20.0	5.0	PF 1/2

DSGC-G (BSP Parallel)

Pressure Gauge Swivel Connector

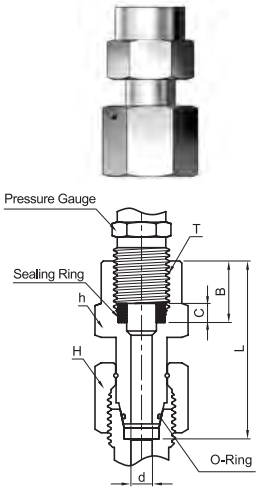

Series	Part Number	Tube O.D.	Dimension						
			d	H	h	L	B	C	T
L Light PN 315	DSGC-06L-02G	6	2.5	14.0	19.0	35.5	14.5	4.5	PF 1/4
	DSGC-08L-02G	8	4.0	17.0	19.0	35.5	14.5	4.5	PF 1/4
	DSGC-10L-02G	10	5.5	19.0	19.0	36.0	14.5	4.5	PF 1/4
	DSGC-12L-02G	12	5.5	22.0	19.0	36.0	14.5	4.5	PF 1/4
S Heavy PN 630	DSGC-06S-02G	6	2.5	17.0	19.0	35.5	14.5	4.5	PF 1/4
	DSGC-08S-02G	8	4.0	19.0	19.0	35.5	14.5	4.5	PF 1/4
	DSGC-10S-02G	10	6.0	22.0	19.0	36.0	14.5	4.5	PF 1/4
	DSGC-12S-02G	12	7.0	24.0	19.0	39.0	14.5	4.5	PF 1/4
	DSGC-06S-04G	6	2.5	17.0	27.0	42.5	20.0	5.0	PF 1/2
	DSGC-08S-04G	8	4.0	19.0	27.0	43.0	20.0	5.0	PF 1/2
	DSGC-10S-04G	10	6.0	22.0	27.0	43.5	20.0	5.0	PF 1/2
	DSGC-12S-04G	12	7.0	24.0	27.0	45.0	20.0	5.0	PF 1/2

DGAP-G (BSP Parallel)

Gauge Adaptor

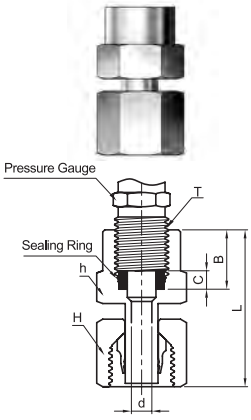

Series	Part Number	Tube O.D.	Dimension						
			d	H	h	L	B	C	T
L Light PN 315	DGAP-06L-02G	6	3.5	14.0	19.0	38.0	14.5	4.5	PF 1/4
	DGAP-08L-02G	8	5.5	17.0	19.0	38.0	14.5	4.5	PF 1/4
	DGAP-10L-02G	10	7.5	19.0	19.0	39.5	14.5	4.5	PF 1/4
	DGAP-12L-02G	12	9.0	22.0	19.0	40.5	14.5	4.5	PF 1/4
S Heavy PN 630	DGAP-06S-04G	6	3.5	17.0	27.0	45.0	20.0	5.0	PF 1/2
	DGAP-08S-04G	8	4.5	19.0	27.0	45.0	20.0	5.0	PF 1/2
	DGAP-10S-04G	10	6.5	22.0	27.0	47.0	20.0	5.0	PF 1/2
	DGAP-12S-04G	12	7.5	24.0	27.0	47.5	20.0	5.0	PF 1/2

• All dimensions in millimeters unless specified as “inch”. Dimension are for reference only, subject to change
• Dimensions given approximate length with tightened nut.

DTPC

Tee Test Point Connector

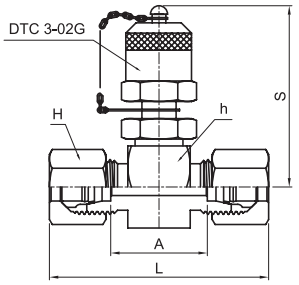

Series	Part Number	Tube O.D.	Dimension				
			H	h	L	A	S
L Light PN 315	DTPC 3-06L	6	14	24	50	20.5	50
	DTPC 3-08L	8	17	24	50	20.5	50
	DTPC 3-10L	10	19	24	52	22.5	50
	DTPC 3-12L	12	22	24	52	22.5	50
	DTPC 3-15L	15	27	30	55	24.5	53
	DTPC 3-18L	18	32	32	56	23.5	54
PB 160	DTPC 3-22L	22	36	36	60	27.5	56
	DTPC 3-28L	28	41	41	61	27.5	58
	DTPC 3-35L	35	50	46	69	25.5	61
	DTPC 3-42L	42	60	55	70	24.5	65
S Heavy PN 630	DTPC 3-06S	6	17	24	54	24.5	50
	DTPC 3-08S	8	19	24	54	24.5	50
	DTPC 3-10S	10	22	24	56	23.5	50
	DTPC 3-12S	12	24	24	56	23.5	50
	DTPC 3-14S	14	27	27	62	26.5	51
PN 400	DTPC 3-16S	16	30	30	62	25.5	53
	DTPC 3-20S	20	36	36	69	25.5	56
	DTPC 3-25S	25	46	41	75	26.5	58
	DTPC 3-30S	30	50	46	81	27.5	61
PN 315	DTPC 3-38S	38	60	55	90	29	65

DTC

Test Coupling

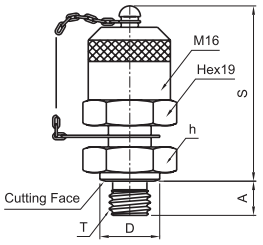

Series	Part Number	Dimension				
		h	D	S	A	T
PB 630	DTC 3-01G	17	14	41	8	PF 1/8
	DTC 3-02G	19	18	41	10	PF 1/4
	DTC 3-03G	22	22	41	12	PF 3/8
	DTC 3-04G	27	26	41	14	PF 1/2
	DTC 3-M10	17	14	41	8	M10 x 1.0
	DTC 3-M12	17	17	41	12	M12 x 1.5
	DTC 3-M14	19	19	41	12	M14 x 1.5
	DTC 3-M16	22	21	41	12	M16 x 1.5

• All dimensions in millimeters unless specified as “inch”. Dimension are for reference only, subject to change
• Dimensions given approximate length with tightened nut.

DWC

Welding Connector

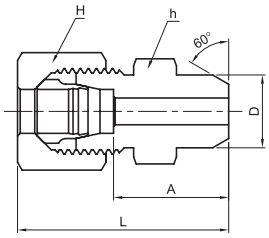

Series	Part Number	Tube O.D.	Dimension				
			D	H	h	L	A
L Light PN 315	DWC - 06L	6	10	14	12	29	14
	DWC - 08L	8	12	17	14	31	16
	DWC - 10L	10	14	19	17	33	18
	DWC - 12L	12	16	22	19	33	18
	DWC - 15L	15	19	27	22	37	22
	DWC - 18L	18	22	32	27	40	23.5
PB 160	DWC - 22L	22	27	36	32	45	28.5
	DWC - 28L	28	32	41	41	47	30.5
	DWC - 35L	35	40	50	46	54	32.5
	DWC - 42L	42	46	60	55	58	35
S Heavy PN 630	DWC - 06S	6	11	17	14	34	19
	DWC - 08S	8	13	19	17	36	21
	DWC - 10S	10	15	22	19	39	22.5
	DWC - 12S	12	17	24	22	41	24.5
	DWC - 14S	14	19	27	24	45	27
PN 400	DWC - 16S	16	21	30	27	45	26.5
	DWC - 20S	20	26	36	32	51	29.5
	DWC - 25S	25	31	46	41	56	32
	DWC - 30S	30	36	50	46	62	35.5
PN 315	DWC - 38S	38	44	60	55	69	38

DAWC

Welding Connector with DWN

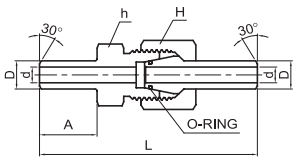

Series S MAX. Pressure	Part Number	Tube O.D.	Dimension				
			d	H	h	L	A
PB248	DAWC-10 x 1.0		8				
PB357	DAWC-10 x 1.5	10	7	22	19	58	10
PB458	DAWC-10 x 2.0		6				
PB303	DAWC-12 x 1.5		9				
PB391	DAWC-12 x 2.0	12	8	24	22	65	15
PB474	DAWC-12 x 2.5		7				
PB234	DAWC-16 x 1.5		13				
PB303	DAWC-16 x 2.0	16	12	30	27	74.5	16.5
PB370	DAWC-16 x 2.5		11				
PB433	DAWC-16 x 3.0		10				
PB249	DAWC-20 x 2.0		16				
PB305	DAWC-20 x 2.5	20	15	36	32	84	19
PB357	DAWC-20 x 3.0		14				
PB458	DAWC-20 x 4.0		12				
PB292	DAWC-25 x 3.0		19				
PB378	DAWC-25 x 4.0	25	17	46	41	94.5	19.5
PB458	DAWC-25 x 5.0		15				
PB248	DAWC-30 x 3.0		24				
PB321	DAWC-30 x 4.0	30	22	50	46	102	23
PB391	DAWC-30 x 5.0		20				
PB460	DAWC-30 x 6.0		18				
PB260	DAWC-38 x 4.0		30				
PB318	DAWC-38 x 5.0	38	28	60	55	111	23
PB373	DAWC-38 x 6.0		26				
PB427	DAWC-38 x 7.0		24				

• All dimensions in millimeters unless specified as “inch”. Dimension are for reference only, subject to change
• Dimensions given approximate length with tightened nut.

DWN

Welding Nipple

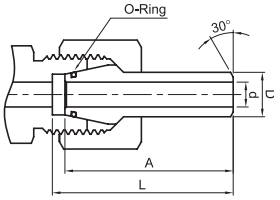

Pressure Rating		Part Number	Tube O.D.	Dimension		
Fittings	DWN and Tube		D	d	L	A
PN630	PB 248	DWN-10 x 1.0	10	8	35.5	33
	PB 357	DWN-10 x 1.5		7		
	PB 458	DWN-10 x 2.0		6		
PN630	PB 303	DWN-12 x 1.5	12	9	35.5	33
	PB 391	DWN-12 x 2.0		8		
	PB 474	DWN-12 x 2.5		7		
PN400	PB 234	DWN-16 x 1.5	16	13	42.5	39
	PB 303	DWN-16 x 2.0		12		
	PB 370	DWN-16 x 2.5		11		
	PB 433	DWN-16 x 3.0		10		
PN400	PB 249	DWN-20 x 2.0	20	16	47.5	43.5
	PB 303	DWN-20 x 2.5		15		
	PB 357	DWN-20 x 3.0		14		
	PB 458	DWN-20 x 4.0		12		
PN400	PB 292	DWN-25 x 3.0	25	19	55	49.5
	PB 378	DWN-25 x 4.0		17		
	PB 458	DWN-25 x 5.0		15		
PN400	PB 248	DWN-30 x 3.0	30	24	58.5	51.5
	PB 321	DWN-30 x 4.0		22		
	PB 391	DWN-30 x 5.0		20		
	PB 460	DWN-30 x 6.0		18		
PN315	PB 260	DWN-38 x 4.0	38	30	66	56.5
	PB 318	DWN-38 x 5.0		28		
	PB 373	DWN-38 x 6.0		26		
	PB 427	DWN-38 x 7.0		24		

DRWN

Reducing Welding

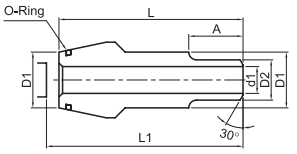

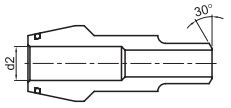

Pressure Rating		Part Number	Tube O.D.		Dimension				
Fittings	DWN and Tube		D1	D2	d1	d2	L1	L	A
PN630	PB 526	DRWN-10- 6 x 1.5	10	6	3	5	37.5	35	12
	PB 526	DRWN-10- 8 x 2.0	10	8	4	-	37.5	35	12
	PB 526	DRWN-12- 8 x 2.0	12	8	4	6	37.5	35	14
	PB 357	DRWN-12-10 x 1.5	12	10	7	-	37.5	35	14
PN400	PB 474	DRWN-16-12 x 2.5	16	12	7	-	46.5	43	15
	PB 474	DRWN-20-12 x 2.5	20	12	7	-	51.5	47.5	15
	PB 433	DRWN-20-16 x 3.0	20	16	10	-	53.5	49.5	17
	PB 433	DRWN-25-16 x 3.0	25	16	10	-	56.5	51	17
	PB 458	DRWN-25-20 x 4.0	25	20	12	-	59.5	54	20
	PB 303	DRWN-30-16 x 2.0	30	16	12	-	67	60	17
	PB 303	DRWN-30-20 x 2.5	30	20	15	-	70	63	20
	PB 292	DRWN-30-25 x 3.0	30	25	19	-	70	63	20
PN315	PB 303	DRWN-38-16 x 2.0	38	16	12	-	79	69.5	17
	PB 303	DRWN-38-20 x 2.5	38	20	15	-	82	72.5	20
	PB 292	DRWN-38-25 x 3.0	38	25	19	-	82	72.5	20
	PB 321	DRWN-38-30 x 4.0	38	30	22	-	82	72.5	20

• All dimensions in millimeters unless specified as “inch”. Dimension are for reference only, subject to change
• Dimensions given approximate length with tightened nut.

DMFC

Male Female Connector

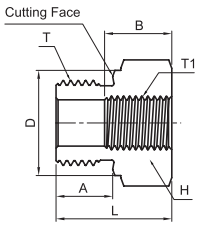

BSP Parallel Thread Type

Series	Part Number	Dimension						
		H	D	L	A	B	T	T1
PB 630	DMFC-03G-01G	22	22	22.5	12	8	PF 3/8	PF 1/8
PB 630	DMFC-04G-01G	27	26	24	14	8	PF 1/2	PF 1/8
PB 400	DMFC-04G-02G	27	26	24	14	12	PF 1/2	PF 1/4
PB 400	DMFC-06G-02G	32	32	26	16	12	PF 3/4	PF 1/4
	DMFC-06G-03G	32	32	26	16	12	PF 3/4	PF 3/8
PB 400	DMFC-08G-02G	41	39	29	18	12	PF1	PF 1/4
	DMFC-08G-03G	41	39	29	18	12	PF1	PF 3/8
	DMFC-08G-04G	41	39	29	18	14	PF1	PF 1/2
PB 250	DMFC-10G-04G	50	49	32	20	14	PF 1 1/4	PF 1/2
	DMFC-10G-06G	50	49	32	20	16	PF 1 1/4	PF 3/4
PB 250	DMFC-12G-04G	55	55	36	22	14	PF 1 1/2	PF 1/2
	DMFC-12G-06G	55	55	36	22	16	PF 1 1/2	PF 3/4
	DMFC-12G-08G	55	55	36	22	18	PF 1 1/2	PF1

DMFG

Male Female Gauge Connector

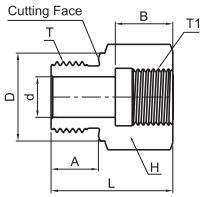

BSP Parallel Thread Type

Series	Part Number	Dimension							
		H	d	D	L	A	B	T	T1
PB 630	DMFG-01G-02G	19	4	14	31	8	17	PF 1/8	PF 1/4
	DMFG-01G-03G	24	4	14	32	8	17	PF 1/8	PF 3/8
	DMFG-02G-01G	19	5	18	28	12	12	PF 1/4	PF 1/8
	DMFG-02G-03G	24	5	18	36	12	17	PF 1/4	PF 3/8
	DMFG-02G-04G	30	5	18	40	12	20	PF 1/4	PF 1/2
PB 400	DMFG-02G-06G	36	5	18	43	12	22	PF 1/4	PF 3/4
PB 630	DMFG-03G-02G	22	8	22	36	12	17	PF 3/8	PF 1/4
	DMFG-03G-04G	30	8	22	41	12	20	PF 3/8	PF 1/2
PB 250	DMFG-03G-06G	36	8	22	44	12	22	PF 3/8	PF 3/4
PB 400	DMFG-04G-03G	27	12	26	36	14	17	PF 1/2	PF 3/8
	DMFG-04G-06G	36	12	26	46	14	22	PF 1/2	PF 3/4
	DMFG-04G-08G	41	12	26	49	14	24.5	PF 1/2	PF 1
PB 250	DMFG-04G-10G	55	10	26	53	14	26.5	PF 1/2	PF 1 1/4
PB 400	DMFG-06G-04G	32	16	32	41	16	20	PF 3/4	PF 1/2
	DMFG-06G-08G	41	16	32	51	16	24.5	PF 3/4	PF 1
	DMFG-06G-10G	55	16	32	55	16	26.5	PF 3/4	PF 1 1/4
PB 250	DMFG-06G-12G	60	16	32	57	16	28.5	PF 3/4	PF 1 1/2
PB 400	DMFG-08G-06G	41	20	39	47	18	22	PF 1	PF 3/4
PB 250	DMFG-08G-10G	55	20	39	57	18	26.5	PF 1	PF 1 1/4
	DMFG-08G-12G	60	20	39	59	18	28.5	PF 1	PF 1 1/2
	DMFG-10G-08G	50	25	49	52	20	24.5	PF 1 1/4	PF 1
	DMFG-10G-12G	60	25	49	60	20	28.5	PF 1 1/4	PF 1 1/2
	DMFG-12G-10G	55	32	55	58	22	26.5	PF 1 1/2	PF 1 1/4
	DMFG-16G-12G	70	40	68	62	24	28.5	PF 2	PF 1 1/2

• All dimensions in millimeters unless specified as “inch”. Dimension are for reference only, subject to change
• Dimensions given approximate length with tightened nut.

DMFC-ED

Male Female Connector with ED-Ring

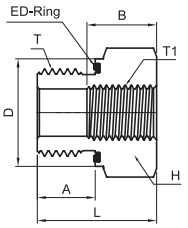

BSP Parallel Thread Type

Series	Part Number	Dimension						
		H	D	L	A	B	T	T1
PB 630	DMFC-03ED-01G	22	22	22.5	12	8	PF 3/8	PF 1/8
PB 630	DMFC-04ED-01G	27	26	24	14	8	PF 1/2	PF 1/8
PB 400	DMFC-04ED-02G	27	26	24	14	12	PF 1/2	PF 1/4
PB 400	DMFC-06ED-02G	32	32	26	16	12	PF 3/4	PF 1/4
	DMFC-06ED-03G	32	32	26	16	12	PF 3/4	PF 3/8
PB 400	DMFC-08ED-02G	41	39	29	18	12	PF1	PF 1/4
	DMFC-08ED-03G	41	39	29	18	12	PF1	PF 3/8
	DMFC-08ED-04G	41	39	29	18	14	PF1	PF 1/2
PB 250	DMFC-10ED-04G	50	49	32	20	14	PF 1 1/4	PF 1/2
	DMFC-10ED-06G	50	49	32	20	16	PF 1 1/4	PF 3/4
PB 250	DMFC-12ED-04G	55	55	36	22	14	PF 1 1/2	PF 1/2
	DMFC-12ED-06G	55	55	36	22	16	PF 1 1/2	PF 3/4
	DMFC-12ED-08G	55	55	36	22	18	PF 1 1/2	PF1

DMFG-ED

Male Female Gauge Connector with ED-Ring

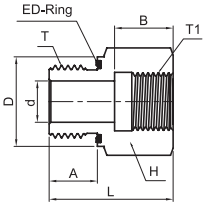

BSP Parallel Thread Type

Series	Part Number	Dimension							
		H	d	D	L	A	B	T	T1
PB 630	DMFG-01ED-02G	19	4	14	31	8	17	PF 1/8	PF 1/4
	DMFG-01ED-03G	24	4	14	32	8	17	PF 1/8	PF 3/8
	DMFG-02ED-01G	19	5	18	28	12	12	PF 1/4	PF 1/8
	DMFG-02ED-03G	24	5	18	36	12	17	PF 1/4	PF 3/8
	DMFG-02ED-04G	30	5	18	40	12	20	PF 1/4	PF 1/2
PB450	DMFG-02ED-06G	36	5	18	43	12	22	PF 1/4	PF 3/4
PB 630	DMFG-03ED-02G	22	8	22	36	12	17	PF 3/8	PF 1/4
	DMFG-03ED-04G	30	8	22	41	12	20	PF 3/8	PF 1/2
PB400	DMFG-03ED-06G	36	8	22	44	12	22	PF 3/8	PF 3/4
PB400	DMFG-04ED-03G	27	12	26	36	14	17	PF 1/2	PF 3/8
	DMFG-04ED-06G	36	12	26	46	14	22	PF 1/2	PF 3/4
	DMFG-04ED-08G	41	12	26	49	14	24.5	PF 1/2	PF 1
PB250	DMFG-04ED-10G	55	10	26	53	14	26.5	PF 1/2	PF 1 1/4
PB400	DMFG-06ED-04G	32	16	32	41	16	20	PF 3/4	PF 1/2
	DMFG-06ED-08G	41	16	32	51	16	24.5	PF 3/4	PF 1
	DMFG-06ED-10G	55	16	32	55	16	26.5	PF 3/4	PF 1 1/4
PB250	DMFG-06ED-12G	60	16	32	57	16	28.5	PF 3/4	PF 1 1/2
PB400	DMFG-08ED-06G	41	20	39	47	18	22	PF 1	PF 3/4
PB250	DMFG-08ED-10G	55	20	39	57	18	26.5	PF 1	PF 1 1/4
	DMFG-08ED-12G	60	20	39	59	18	28.5	PF 1	PF 1 1/2
	DMFG-10ED-08G	50	25	49	52	20	24.5	PF 1 1/4	PF 1
	DMFG-10ED-12G	60	25	49	60	20	28.5	PF 1 1/4	PF 1 1/2
	DMFG-12ED-10G	55	32	55	58	22	26.5	PF 1 1/2	PF 1 1/4
	DMFG-16ED-12G	70	40	68	62	24	28.5	PF 2	PF 1 1/2

• All dimensions in millimeters unless specified as “inch”. Dimension are for reference only, subject to change
• Dimensions given approximate length with tightened nut.

DC
Tube Cap

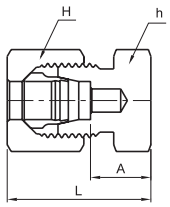

Series	Part Number	Tube O.D.	Dimension			
			H	h	L	A
L Light PN 315	DC-06L	6	14	12	22	7.0
	DC-08L	8	17	14	23	8.0
	DC-10L	10	19	17	24	9.0
	DC-12L	12	22	19	25	10.0
	DC-15L	15	27	24	26	11.0
	DC-18L	18	32	27	28	11.5
PN 160	DC-22L	22	36	32	30	13.5
	DC-28L	28	41	41	31	14.5
	DC-35L	35	50	46	36	14.5
	DC-42L	42	60	55	39	16.0
S Heavy PN 630	DC-06S	6	17	14	26	11.0
	DC-08S	8	19	17	28	13.0
	DC-10S	10	22	19	29	12.5
	DC-12S	12	24	22	31	14.5
	DC-14S	14	27	24	34	16.0
PN 400	DC-16S	16	30	27	34	15.5
	DC-20S	20	36	32	39	17.5
	DC-25S	25	46	41	44	20.0
	DC-30S	30	50	46	47	20.5
PN 315	DC-38S	38	60	55	54	23.0

DP
Plug

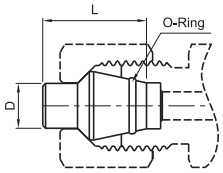

Series	Part Number	Tube O.D.	Dimension	
			D	L
L Light PN 315	DP-06LS	6	6	18.5
	DP-08LS	8	8	18.5
	DP-10LS	10	10	20
	DP-12LS	12	12	20.5
	DP-15L	15	15	20.5
	DP-18L	18	18	22.5
PN 160	DP-22L	22	22	25
	DP-28L	28	28	25.5
	DP-35L	35	35	30
	DP-42L	42	42	30
S Heavy PN 630	DP-14S	14	14	22.5
PN 400	DP-16S	16	16	23.5
	DP-20S	20	20	28.5
	DP-25S	25	25	29
	DP-30S	30	30	30.5
PN 315	DP-38S	38	38	33

• All dimensions in millimeters unless specified as “inch”. Dimension are for reference only, subject to change
• Dimensions given approximate length with tightened nut.

DBP-GED/MED(BSP Parallel/Metric Parallel)

Blanking Plugs for Port with ED-Ring

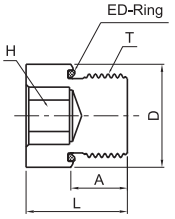

Series	Part Number	T		Dimension			
		M(Metric)	G(PF)	D	H	L	A
PB 400	DBP-01GED	M10 x 1.0	1/8	14.0	5	12.0	8
	-	M12 x 1.5	-	17.0	6	17.0	12
	DBP-02GED	M14 x 1.5	1/4	19.0	6	17.0	12
	DBP-03GED	M16 x 1.5	3/8	22.0	8	17.0	12
	-	M18 x 1.5	-	23.9	8	17.0	12
	-	M20 x 1.5	-	25.9	10	19.0	14
	DBP-04GED	M22 x 1.5	1/2	27.0	10	19.0	14
	-	M26 x 1.5	-	31.9	12	21.0	16
	DBP-06GED	M27 x 2.0	3/4	32.0	12	21.0	16
	DBP-08GED	M33 x 2.0	1	39.9	17	22.5	16
PB 250	DBP-10GED	M42 x 2.0	1 1/4	49.9	22	22.5	16
	DBP-12GED	M48 x 2.0	1 1/2	55.0	24	22.5	16

DBP-M (Metric Parallel)

Blanking Plugs with O-Ring

(accord.to ISO 6149-3/DIN 3582)

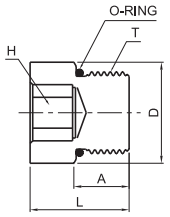

Series	Part Number	T	Dimension			
		M(Metric)	D	H	L	A
PB 630	DBP-M10	M10 x 1	13	5	14	10
	DBP-M12	M12 x 1.5	17	6	16.5	11.5
	DBP-M14	M14 x 1.5	19	6	16.5	11.5
	DBP-M16	M16 x 1.5	21	6	18	13
	DBP-M18	M18 x 1.5	23	8	19.5	14.5
	DBP-M22	M22 x 1.5	27	10	20.5	15.5
	DBP-M26	M26 x 1.5	31	12	21	16
	DBP-M27	M27 x 2	32	12	24	19
	DBP-M33	M33 x 2	38	17	25.5	19
	DBP-M42	M42 x 2	48	22	26	19.5

• All dimensions in millimeters unless specified as “inch”. Dimension are for reference only, subject to change
• Dimensions given approximate length with tightened nut.

Tube end Dimension

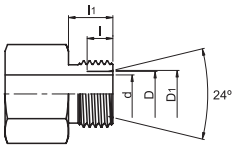

DNT

NUT

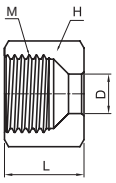

DCR

Cutting Ring

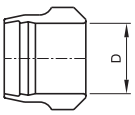

Series	Nut Part Number	Cutting Ring Part Number	Tube O.D.	DN Size	Dimension							
					D	D1	d	H	L	M	l	l1
LL Very Light	DNT-04LL	DCR-04LL	4	3	4	5	3	10	11.5	M8 x 1.0	4	8
	DNT-06LL	DCR-06LL	6	4	6	7.5	4.5	12	12	M10 x 1.0	5.5	8
	DNT-08LL	DCR-08LL	8	6	8	9.5	6	14	12.5	M12 x 1.0	5.5	9
	DNT-10LL	DCR-10LL	10	8	10	11.5	8	17	12.5	M14 x 1.0	6	9
	DNT-12LL	DCR-12LL	12	10	12	13.5	10	19	13	M16 x 1.0	6	9
L Light	DNT-06L	DCR-06	6	4	6	8.1	4	14	15	M12 x 1.5	7	10
	DNT-08L	DCR-08	8	6	8	10.1	6	17	15	M14 x 1.5	7	10
	DNT-10L	DCR-10	10	8	10	12.3	8	19	16	M16 x 1.5	7	11
	DNT-12L	DCR-12	12	10	12	14.3	10	22	16	M18 x 1.5	7	11
	DNT-15L	DCR-15	15	12	15	17.3	12	27	17.5	M22 x 1.5	7	12
	DNT-18L	DCR-18	18	16	18	20.3	15	32	18	M26 x 1.5	7.5	12
	DNT-22L	DCR-22	22	20	22	24.3	19	36	20.5	M30 x 2.0	7.5	14
	DNT-28L	DCR-28	28	25	28	30.3	24	41	21	M36 x 2.0	7.5	14
	DNT-35L	DCR-35	35	32	35	38	30	50	24	M45 x 2.0	10.5	16
	DNT-42L	DCR-42	42	40	42	45	36	60	24	M52 x 2.0	11	16
S Heavy	DNT-06S	DCR-06	6	3	6	8.1	4	17	16.5	M14 x 1.5	7	12
	DNT-08S	DCR-08	8	4	8	10.1	5	19	16.5	M16 x 1.6	7	12
	DNT-10S	DCR-10	10	6	10	12.3	7	22	17.5	M18 x 1.5	7.5	12
	DNT-12S	DCR-12	12	8	12	14.3	8	24	18	M2 x 1.5	7.5	12
	DNT-14S	DCR-14	14	10	14	16.3	10	27	20.5	M22 x 1.5	8	14
	DNT-16S	DCR-16	16	12	16	18.3	12	30	21	M24 x 1.5	8.5	14
	DNT-20S	DCR-20	20	16	20	22.9	16	36	24	M30 x 2.0	10.5	16
	DNT-25S	DCR-25	25	20	25	27.9	20	46	27	M36 x 2.0	12	18
	DNT-30S	DCR-30	30	25	30	33	25	50	29.5	M42 x 2.0	13.5	20
	DNT-38S	DCR-38	38	32	38	41	32	60	32.5	M52 x 2.0	16	22

DED

ED-Ring

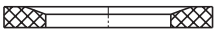

Part Number	For Male Thread	
DED- M8	M8 x 1.0	-
DED-M10	M10 x 1.0	PF 1/8
DED-M12	M12 x 1.5	-
DED-M14	M14 x 1.5	PF 1/4
DED-M16	M16 x 1.5	-
DED-03G	-	PF 3/8
DED-M18	M18 x 1.5	-
DED-M20	M20 x 1.5	-
DED-04G	-	PF 1/2
DED-M22	M22 x 1.5	--
DED-M26	M26 x 1.5	PF 3/4
DED-M27	M27 x 2.0	
DED-M33	M33 x 2.0	PF 1
DED-M42	M42 x 2.0	PF 1 1/4
DED-M48	M48 x 2.0	PF 1 1/2

DOR

O-Ring

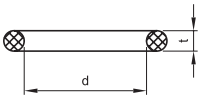

Part Number	For Male Thread	
DOR-4	4	1.5
DOR-6	6	1.5
DOR-7.5	7.5	1.5
DOR-9	9	1.5
DOR-10	10	2.0
DOR-12	12	2.0
DOR-15	15	2.0
DOR-16.3	16.3	2.4
DOR-20	20	2
DOR-20.3	20.3	2.4
DOR-25.3	25.3	2.4
DOR-26	26	2
DOR-32	32	2.5
DOR-33.3	33.3	2.4
DOR-38	38	2.5

• All dimensions in millimeters unless specified as “inch”. Dimension are for reference only, subject to change
• Dimensions given approximate length with tightened nut.

Bite Type Tube Fittings (DIN2353)

www.sks-online.com

SUPERLOK®

Bite Type Tube Fittings (JIS B2351)

www.superlok.com

INDEX

SUPERLOK Bite Type Fitting is manufactured to JIS B2351& KS B1535 under strict ISO 9001 procedure

Standard of SUPERLOK Bite Type Fitting

Bite type fitting consists of three parts : BODY, SLEEVE and NUT, and is designed to work over medium and heavy wall tubing. See Fig.1

BODY, SHOULDER, SLEEVE, NUT & TUBE

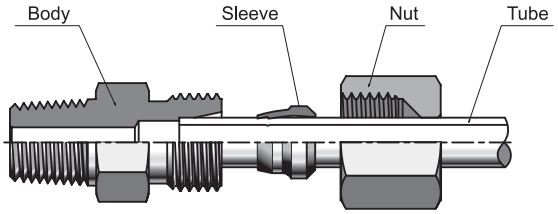

Fig.1

The sleeve is driven forward on the tube by the nut. As the sleeve moves forward it meets the seal seat angle of the body which causes the sleeve to cam inward into the tube. The sleeve then bites into the tube causing a small ridge of tube material to be pushed up in front of the biting edge of the sleeve. See Fig.2

Internal ridge on Tube

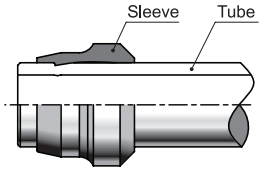

Fig.2

The make up of the fitting is critical in that the tube must be bottomed against the tube stop in the body or presetting tool during make up. If it is not bottomed the tube will move forward with the sleeve and a bite will not be achieved.
Make sure the tube is bottomed. A check is possible to see if the tube was bottomed during make up. To make this check look at the end of the tube, and notice if a circular appearing ring has been impressed into the tube end face. This impression will be caused by the tube stop which has a slight reverse angle rather than a flat face.

Pressure Range & Working Temperature

Material			Carbon Steel	Stainless Steel	Brass
Pressure (Kgf/cm²)	O.D (mm)	4-15	500		250
		16-22	400		210
		25-28	350		170
		30-38	250		150
		40-50	210		120
Temperature			-40℃ to 120℃ (DIN 3859)	-60℃ to 400℃ (DIN 17440)	-60℃ to 175℃

Material Specifications

Parts	Carbon Steel	Stainless Steel	Brass
Forged Body	JIS G4051 S20C-S48C	SUS316, SUS304	JIS H3250 C3771
Bar Stock Body	JIS G4051 S20C-S48C	SUS316, SUS304	JIS H3250 C3604
Cold Formed Nut	JIS G4051 S10C-S20C		
Bar Stock Nut	JIS G4051 S20C-S48C	SUS316, SUS304	JIS H3250 C3604
Sleeve	JIS G4051 S10C	SUS316, SUS304	JIS H3250 C3604

Tubing Selection

Carbon Steel :

Seamless, welded, fully annealed and redrawn tube suitable for bending with maximum hardness Rockwell B72.

Stainless Steel :

Seamless, welded, fully annealed and redrawn tube suitable for bending with maximum hardness Rockwell B90

Copper :

For seamless coils, soft or light annealed, maximum hardness Rockwell F55.
For straight lengths, light drawn and general purpose, maximum hardness 60 on Rockwell 30T scale.

Assembly Instructions

Step 1. Cutting the tube :

Cut tube squarely and lightly deburr the end internally and externally.

Step 2. Sleeve placement :

Set a nut and sleeve on the tube. Make sure the sleeve and the nut are facing the fitting.

Step 3. Lubrication :

Lightly lubricate threads on tool or body as well as the tail and lead end of the sleeve with an extreme friction lubricant.

Step 4. Pre-setting :

Insert tube end into tool or fitting until it bottoms against the shoulder(to hold tube motionless during pre-setting operation) and screw nut down finger tight.

Step 5. Final setting :

Wrench nut down 1-1/2 turns to pre-set the sleeve reliable make up of all flareless tube fittings is dependent upon the sleeve traveling a prescribed distance into the tapered fitting throat in order to bite into the tube and effect a positive grip and seal.

Reassembly Instructions

Fitting can be used many times. To ensure this, parts must be clean and free of defects.

Step 1. Insert the tube into fitting body until sleeve seats firmly in the fitting and hand-tighten the nut.

Step 2. Tighten the nut with a wrench by holding the fitting body with a backup wrench until a sharp rise in torque is felt.
Further tighten the nut 1/4 to 1/2 turn.

Pre-Set Inspection

All SUPERLOK fitting presets must be disassembled and inspected for proper sleeve pre-set before final installation for service. The following detailed inspection procedures must be followed regardless of the method used to pre-set the sleeve to the tube. (See Fig.3)

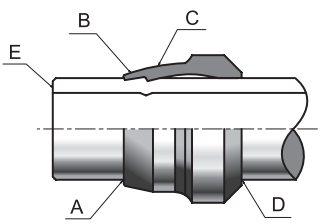

Fig.3

1. A ridge of metal (A) has been raised above the tube surface to a height of at least 50% of the thickness of the sleeve leading edge, completely around the tube.

2. While the leading edge of the sleeve may be coined flat (B) there is a slight bow to the balance of the pilot section (C).

3. The tail or back end of the sleeve is snug against the tube (D).

4. There is a slight indentation around the end of the tube (E) that indicates the tube was bottomed in the tool or fitting during pre-setting (if evidence of this complete contact is not visible the sleeve may not be properly pre-set).

5. Avoid rotating the sleeve. Steel sleeve should not be capable of moving back and forth along the tube beyond the bite area (a stainless steel sleeve will move more than steel because of it's spring back characteristics).

Trouble Shooting Guide

Problems with bite type fittings are most of ten traced to faulty Pre-Set/Assembly procedure.

1. Tube not bottomed

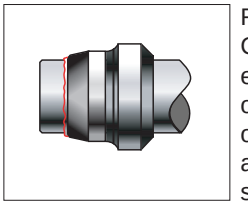

Remedy:
Check for the indentation on the tube end or compare the length from the end of the tube to the front end of the sleeve of a known good assembly to that of the assembly in question. This assembly should be scrapped.

2. Shallow bite

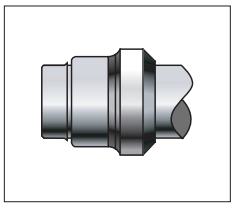

Remedy:
Inspect for turned up ridge of material. A failure to achieve this ridge can be traced either to the nut not being tightened enough or the tube not being bottomed against the stop which allowed the tube to travel forward with the sleeve. In some instances this assembly may be re-worked.

3. Over-set sleeve

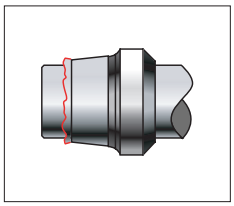

Remedy:
Too much pressure or more than 1-3/4 turns from finger tight were used to pre-set sleeve, or the nut was severely over-tightened in final assembly. This assembly should be scrapped.

4. Sleeve cocked on tube

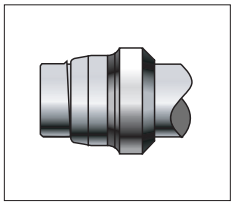

Remedy:
The sleeve may become cocked on the tube when the tube end is not properly lined up with the body. Generally, this condition is caused by faulty tube bending. All bent tube assemblies should drop into the fitting body prior to make up. This assembly should be scrapped.

5. No bite

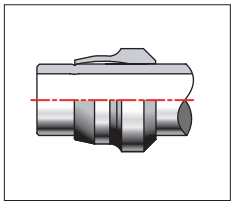

Remedy:
If all of the prior checks have been made and the sleeve still shows no sign of biting the tube, it may be that the tube is too hard. This assembly should be scrapped.

Ordering Information

Example 1

B	CM	-	08	-	02	R
1	2		3		4	5

Example 2

B	US	-	12
1	2		3

1. SUPERLOK Bite Type Fitting

2. Name of Fitting

3. Tube and Pipe Designations

Metric Tube	Out dia.	4	6	8	10	12..... 38		40	50
	Designation	04	06	08	10	12..... 38		40	50
SCH, PIPE	Nominal dia.	1/8	1/4	3/8	1/2	3/4	1	1 1/4	1 1/2
	Out dia.	10.5	13.8	17.3	21.7	27.2	34.0	42.7	48.6
	Designation	6A	8A	10A	15A	20A	25A	32A	40A

4. Pipe Thread Designations

Thread	1/8	1/4	3/8	1/2	3/4	1	1 1/4	1 1/2	2
Designation	01	02	03	04	06	08	10	12	16

5. Thread Symbols

Type	Symbol	Specification
Taper Threads	R	JIS B 0203(PT), ISO 7/1
	N	ANSI B 1.20.1(NPT)
Parallel Threads	G	JIS B 0202(PF), ISO 228/1

Material Indication System

- C = Carbon Steel
- SS = 316 Stainless Steel
- 304 = 304 Stainless Steel
- B = Brass

Example

BCM - 08 - 02 R - B

Brass

BUS

Straight Union

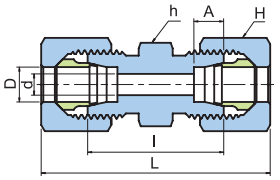

Part Number	Tube O.D. D	Dimension					
		d	A	H	h	l	L
BUS-04	4	2.5	6	12	12	20	35
BUS-06	6	4	7	14	14	30	51
BUS-08	8	6	7	17	17	31	52
BUS-10	10	8	7	19	17	31	54
BUS-12	12	10	7	22	19	31	54
BUS-15	15	12	7.5	27	24	36	61
BUS-16	16	13	7.5	30	27	36	61
BUS-18	18	14	8	32	27	36	61
BUS-20	20	17	8	36	30	38	63
BUS-22	22	18	9	36	32	38	63
BUS-25	25	20	10	41	36	39	66
BUS-28	28	22	10	46	41	43	71
BUS-30	30	25	10	46	41	43	72
BUS-32	32	26	11	50	46	44	73
BUS-35	35	28	11	55	46	44	79
BUS-38	38	32	12	60	50	46	85
BUS-40	40	32	12	60	55	55	94
BUS-42	42	34	12	60	55	55	94
BUS-50	50	40	12	75	65	60	103
BUS-6A	1/8 10.5	8	7	19	17	31	54
BUS-8A	1/4 13.8	11	7.5	24	22	36	60
BUS-10A	3/8 17.3	14	8	32	27	36	61
BUS-15A	1/2 21.7	18	9	36	32	38	63
BUS-20A	3/4 27.2	22	10	46	41	43	71
BUS-25A	1 34.0	28	11	55	46	44	79
BUS-32A	1 1/4 42.7	34	12	65	60	57	98
BUS-40A	1 1/2 48.6	40	12	75	65	60	103

BUE

Union Elbow

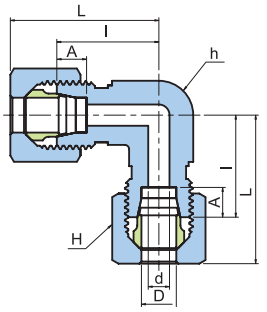

Part Number	Tube O.D. D	Dimension					
		d	A	H	h	l	L
BUE-04	4	2.5	6	12	12	15	22.5
BUE-06	6	4	7	14	14	20	30.5
BUE-08	8	6	7	17	17	23	33.5
BUE-10	10	8	7	19	17	23	34.5
BUE-12	12	10	7	22	19	24	35.5
BUE-15	15	12	7.5	27	24	29	41.5
BUE-16	16	13	7.5	30	27	32	44.5
BUE-18	18	14	8	32	27	32	44.5
BUE-20	20	17	8	36	30	33	45.5
BUE-22	22	18	9	36	32	34	46.5
BUE-25	25	20	10	41	36	36	49.5
BUE-28	28	22	10	46	41	41	55
BUE-30	30	25	10	46	41	41	55.5
BUE-32	32	26	11	50	46	45	59.5
BUE-35	35	28	11	55	46	46	63.5
BUE-38	38	32	12	60	50	50	69.5
BUE-40	40	32	12	60	55	55	74.5
BUE-42	42	34	12	60	55	55	74.5
BUE-50	50	40	12	75	65	62	83.5
BUE-6A	1/8 10.5	8	7	19	17	23	34.5
BUE-8A	1/4 13.8	11	7.5	24	22	28	40
BUE-10A	3/8 17.3	14	8	32	27	32	44.5
BUE-15A	1/2 21.7	18	9	36	32	34	46.5
BUE-20A	3/4 27.2	22	10	46	41	41	55
BUE-25A	1 34.0	28	11	55	46	46	63.5
BUE-32A	1 1/4 42.7	34	12	65	60	57	77.5
BUE-40A	1 1/2 48.6	40	12	75	65	62	83.5

• All dimensions in millimeters unless specified as “inch”. Dimension are for reference only, subject to change
• Dimensions given approximate length with tightened nut.

BUT
Union Tee

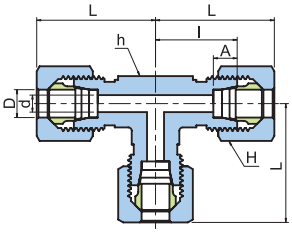

Part Number	Tube O.D. D		Dimension					
			d	A	H	h	l	L
BUT-04	4		2.5	6	12	12	15	22.5
BUT-06	6		4	7	14	14	20	30.5
BUT-08	8		6	7	17	17	23	33.5
BUT-10	10		8	7	19	17	23	34.5
BUT-12	12		10	7	22	19	24	35.5
BUT-15	15		12	7.5	27	24	29	41.5
BUT-16	16		13	7.5	30	27	32	44.5
BUT-18	18		14	8	32	27	32	44.5
BUT-20	20		17	8	36	30	33	45.5
BUT-22	22		18	9	36	32	34	46.5
BUT-25	25		20	10	41	36	36	49.5
BUT-28	28		22	10	46	41	41	55
BUT-30	30		25	10	46	41	41	55.5
BUT-32	32		26	11	50	46	45	59.5
BUT-35	35		28	11	55	46	46	63.5
BUT-38	38		32	12	60	50	50	69.5
BUT-40	40		32	12	60	55	55	74.5
BUT-42	42		34	12	60	55	55	74.5
BUT-50	50		40	12	75	65	62	83.5
BUT-6A	1/8	10.5	8	7	19	17	23	34.5
BUT-8A	1/4	13.8	11	7.5	24	22	28	40
BUT-10A	3/8	17.3	14	8	32	27	32	44.5
BUT-15A	1/2	21.7	18	9	36	32	34	46.5
BUT-20A	3/4	27.2	22	10	46	41	41	55
BUT-25A	1	34.0	28	11	55	46	46	63.5
BUT-32A	1 1/4	42.7	34	12	65	60	57	77.5
BUT-40A	1 1/2	48.6	40	12	75	65	62	83.5

BUC
Union Cross

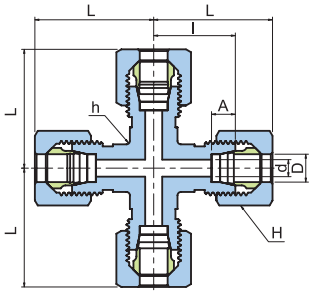

Part Number	Tube O.D. D	Dimension					
		d	A	H	h	l	L
BUC-06	6	4	7	14	17	23	33.5
BUC-08	8	6	7	17	17	23	33.5
BUC-10	10	8	7	19	19	24	35.5
BUC-12	12	10	7	22	19	24	35.5
BUC-15	15	12	7.5	27	27	32	44.5
BUC-16	16	13	7.5	30	27	32	44.5
BUC-18	18	14	8	32	30	33	45.5
BUC-20	20	17	8	36	30	33	45.5
BUC-25	25	20	10	41	36	36	49.5
BUC-30	30	25	10	46	46	45	59.5
BUC-32	32	26	11	50	46	45	59.5

• All dimensions in millimeters unless specified as “inch”. Dimension are for reference only, subject to change
• Dimensions given approximate length with tightened nut.

BBHU

Bulkhead Union

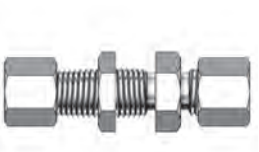

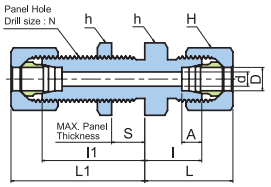

Part Number	Tube O.D. D	Dimension									
		d	A	H	h	l	l1	L	L1	S	N
BBHU-04	4	2.5	6	12	14	14	25	21.5	32.5	13	10.5
BBHU-06	6	4	7	14	17	19	32	29.5	42.5	13	12.5
BBHU-08	8	6	7	17	19	19	32	29.5	42.5	13	14.5
BBHU-10	10	8	7	19	22	20	32	31.5	43.5	13	16.5
BBHU-12	12	10	7	22	24	20	32	31.5	43.5	13	18.5
BBHU-15	15	12	7.5	27	27	22	37	34.5	49.5	15	22.5
BBHU-16	16	13	7.5	30	30	24	37	36.5	49.5	15	24.5
BBHU-18	18	14	8	32	32	24	39	36.5	51.5	15	26.5
BBHU-20	20	17	8	36	32	24	39	36.5	51.5	15	28.5
BBHU-22	22	18	9	36	36	25	39	37.5	51.5	15	30.5
BBHU-25	25	20	10	41	41	25	39	38.5	52.5	15	35.5
BBHU-28	28	22	10	46	46	28	41	42	55	15	38.5
BBHU-30	30	25	10	46	46	28	41	42.5	55.5	15	40.5
BBHU-32	32	26	11	50	50	30	43	44.5	57.5	15	42.5
BBHU-35	35	28	11	55	50	30	43	47.5	60.5	15	45.5
BBHU-38	38	32	12	60	55	31	45	50.5	64.5	15	48.5
BBHU-40	40	32	12	60	60	37	50	56.5	69.5	15	52.5
BBHU-50	50	40	12	75	70	43	50	64.5	71.5	15	64.5
BBHU-6A	1/8 10.5	8	7	19	22	20	32	31.5	43.5	13	16.5
BBHU-8A	1/4 13.8	11	7.5	24	27	22	37	34	49	15	20.5
BBHU-10A	3/8 17.3	14	8	32	32	24	39	36.5	51.5	15	26.5
BBHU-15A	1/2 21.7	18	9	36	36	25	39	37.5	51.5	15	30.5
BBHU-20A	3/4 27.2	22	10	46	46	28	41	42	55	15	38.5
BBHU-25A	1 34.0	28	11	55	50	30	43	47.5	60.5	15	45.5
BBHU-32A	1 1/4 42.7	34	12	65	65	40	50	60.5	70.5	15	56.5
BBHU-40A	1 1/2 48.6	40	12	75	70	43	50	64.5	71.5	15	64.5

BBUE

Bulkhead Union Elbow

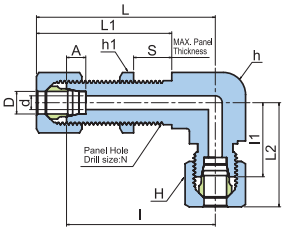

Part Number	Tube O.D. D	Dimension											
		d	A	h1	H	A	l	l1	L	L1	L2	S	N
BBUE-06	6	4	17	17	14	7	45	23	55.5	42.5	33.5	13	12.5
BBUE-08	8	6	19	19	17	7	46	24	56.5	42.5	34.5	13	14.5
BBUE-10	10	8	22	22	19	7	48	26	59.5	43.5	37.5	13	16.5
BBUE-12	12	10	24	24	22	7	49	27	60.5	43.5	38.5	13	18.5
BBUE-15	15	12	27	27	27	7.5	57	31	69.5	49.5	43.5	15	22.5
BBUE-16	16	13	30	30	30	7.5	59	33	71.5	49.5	45.5	15	24.5
BBUE-18	18	14	32	32	32	8	63	33	75.5	51.5	45.5	15	26.5
BBUE-20	20	17	32	36	36	8	65	33	77.5	51.5	45.5	15	28.5
BBUE-22	22	18	36	36	36	9	65	36	77.5	51.5	48.5	15	30.5
BBUE-25	25	20	41	41	41	10	68	39	81.5	52.5	52.5	15	35.5
BBUE-28	28	22	41	46	46	10	70	41	84	55	55	15	38.5
BBUE-30	30	25	46	46	46	10	74	46	88.5	55.5	60.5	15	40.5

• All dimensions in millimeters unless specified as “inch”. Dimension are for reference only, subject to change
• Dimensions given approximate length with tightened nut.

BCM-R

Male Connector

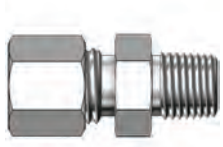

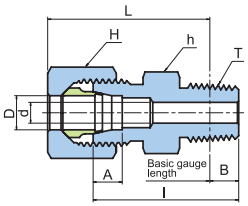

Part Number	Tube O.D. D	Dimension							
		d	A	B	H	h	l	L	T
BCM-04-01R	4	2.5	6	3.97	12	12	22	25.5	PT 1/8
BCM-06-01R	6	4	7	3.97	14	14	28	34.5	PT 1/8
BCM-06-02R	6	4	7	6.01	14	17	33	37.5	PT 1/4
BCM-08-01R	8	4	7	3.97	17	17	29	35.5	PT 1/8
BCM-08-02R	8	6	7	6.01	17	17	33	37.5	PT 1/4
BCM-10-02R	10	7	7	6.01	19	17	33	38.5	PT 1/4
BCM-10-03R	10	8	7	6.35	19	19	34	39	PT 3/8
BCM-10-04R	10	8	7	8.16	19	22	39	42.5	PT 1/2
BCM-12-02R	12	7	7	6.01	22	19	33	38.5	PT 1/4
BCM-12-03R	12	9	7	6.35	22	19	34	39	PT 3/8
BCM-12-04R	12	10	7	8.16	22	24	39	42.5	PT 1/2
BCM-15-03R	15	9	7.5	6.35	27	24	37	43	PT 3/8
BCM-15-04R	15	12	7.5	8.16	27	24	41	45.5	PT 1/2
BCM-16-03R	16	9	7.5	6.35	30	27	37	43	PT 3/8
BCM-16-04R	16	12	7.5	8.16	30	27	41	45.5	PT 1/2
BCM-18-03R	18	9	8	6.35	32	27	37	43	PT 3/8
BCM-18-04R	18	12	8	8.16	32	27	41	45.5	PT 1/2
BCM-20-04R	20	12	8	8.16	36	30	43	47.5	PT 1/2
BCM-20-06R	20	16	8	9.53	36	30	45	48	PT 3/4
BCM-22-04R	22	12	9	8.16	36	32	43	47.5	PT 1/2
BCM-22-06R	22	16	9	9.53	36	32	45	48	PT 3/4
BCM-25-06R	25	16	10	9.53	41	36	46	50	PT 3/4
BCM-25-08R	25	20	10	10.39	41	36	49	52	PT 1
BCM-28-06R	28	16	10	9.53	46	41	48	52.5	PT 3/4
BCM-28-08R	28	22	10	10.39	46	41	51	54.5	PT 1
BCM-30-08R	30	22	10	10.39	46	41	51	55	PT 1
BCM-30-10R	30	25	10	12.70	46	46	55	57	PT 1 1/4
BCM-32-10R	32	26	11	12.70	50	46	55	57	PT 1 1/4
BCM-35-10R	35	28	11	12.70	55	46	55	60	PT 1 1/4
BCM-38-12R	38	32	12	12.70	60	50	57	64	PT 1 1/2
BCM-40-12R	40	32	12	12.70	60	55	62	69	PT 1 1/2
BCM-42-12R	42	34	12	12.70	60	55	62	69	PT 1 1/2
BCM-50-16R	50	40	12	15.88	75	65	71	76.5	PT 2
BCM-6A-01R	1/8 10.5	4	7	3.97	19	17	29	36.5	PT 1/8
BCM-6A-02R	1/8 10.5	7	7	6.01	19	17	33	38.5	PT 1/4
BCM-8A-02R	1/4 13.8	7	7.5	6.01	24	22	36	42	PT 1/4
BCM-8A-03R	1/4 13.8	9	7.5	6.35	24	22	37	42.5	PT 3/8
BCM-10A-03R	3/8 17.3	9	8	6.35	32	27	37	43	PT 3/8
BCM-10A-04R	3/8 17.3	12	8	8.16	32	27	41	45.5	PT 1/2
BCM-15A-04R	1/2 21.7	12	9	8.16	36	32	43	47.5	PT 1/2
BCM-15A-06R	1/2 21.7	16	9	9.53	36	32	45	48	PT 3/4
BCM-20A-06R	3/4 27.2	16	10	9.53	46	41	48	52.5	PT 3/4
BCM-20A-08R	3/4 27.2	22	10	10.39	46	41	51	54.5	PT 1
BCM-25A-08R	1 34.0	22	11	10.39	55	46	52	59	PT 1
BCM-25A-10R	1 34.0	28	11	12.70	55	46	55	60	PT 1 1/4
BCM-32A-10R	1 1/4 42.7	31	12	12.70	65	60	64	72	PT 1 1/4
BCM-32A-12R	1 1/4 42.7	34	12	12.70	65	60	64	72	PT 1 1/2
BCM-40A-12R	1 1/2 48.6	36	12	12.70	75	65	67	76	PT 1 1/2
BCM-40A-16R	1 1/2 48.6	40	12	15.88	75	65	71	76.5	PT 2

• All dimensions in millimeters unless specified as “inch”. Dimension are for reference only, subject to change
• Dimensions given approximate length with tightened nut.

BCM-G

Male Connector (For Copper Gasket)

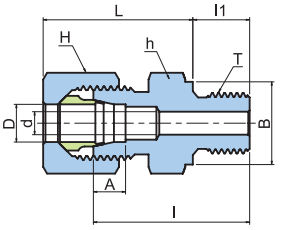

Part Number	Tube O.D. D		Dimension								
			d	A	B	H	h	l	l1	L	T
BCM-04-01G	4		2.5	6	14	12	14	23	8	22.5	PF1/8
BCM-06-01G	6		4	7	14	14	14	28	8	30.5	PF1/8
BCM-06-02G	6		4	7	18	14	19	33	12	31.5	PF1/4
BCM-08-01G	8		4	7	14	17	17	28	8	30.5	PF1/8
BCM-08-02G	8		6	7	18	17	19	33	12	31.5	PF1/4
BCM-10-02G	10		6	7	18	19	19	33	12	32.5	PF1/4
BCM-10-03G	10		8	7	21.5	19	22	34	12	33.5	PF3/8
BCM-12-02G	12		6	7	18	22	19	33	12	32.5	PF1/4
BCM-12-03G	12		8	7	21.5	22	22	34	12	33.5	PF3/8
BCM-12-04G	12		10	7	25.5	22	27	39	14	36.5	PF1/2
BCM-15-03G	15		8	7.5	21.5	27	24	37	12	37.5	PF3/8
BCM-15-04G	15		12	7.5	25.5	27	27	41	14	39.5	PF1/2
BCM-16-04G	16		12	7.5	25.5	30	27	41	14	39.5	PF1/2
BCM-18-04G	18		12	8	25.5	32	27	41	14	39.5	PF1/2
BCM-20-06G	20		16	8	31.5	36	32	46	16	42.5	PF3/4
BCM-22-04G	22		12	9	25.5	36	32	43	14	41.5	PF1/2
BCM-22-06G	22		16	9	31.5	36	32	46	16	42.5	PF3/4
BCM-25-06G	25		16	10	31.5	41	36	46	16	43.5	PF3/4
BCM-25-08G	25		20	10	38	41	41	50	18	45.5	PF1
BCM-28-08G	28		22	10	38	46	41	52	18	48	PF1
BCM-30-08G	30		22	10	38	46	41	52	18	48.5	PF1
BCM-30-10G	30		25	10	48.5	46	50	57	20	51.5	PF1 1/4
BCM-32-10G	32		26	11	48.5	50	50	57	20	51.5	PF1 1/4
BCM-35-10G	35		28	11	48.5	55	50	57	20	54.5	PF1 1/4
BCM-38-12G	38		32	12	53.5	60	55	58	21	56.5	PF1 1/2
BCM-40-12G	40		32	12	53.5	60	55	62	21	60.5	PF1 1/2
BCM-42-12G	42		34	12	53.5	60	55	62	21	60.5	PF1 1/2
BCM-50-16G	50		40	12	66	75	70	73	25	69.5	PF2
BCM-6A-01G	1/8	10.5	4	7	14	19	17	29	8	32.5	PF1/8
BCM-6A-02G	1/8	10.5	6	7	18	19	19	33	12	32.5	PF1/4
BCM-8A-02G	1/4	13.8	6	7.5	18	24	22	36	12	36	PF1/4
BCM-8A-03G	1/4	13.8	8	7.5	21.5	24	22	36	12	36	PF3/8
BCM-10A-03G	3/8	17.3	8	8	21.5	32	27	38	12	38.5	PF3/8
BCM-10A-04G	3/8	17.3	12	8	25.5	32	27	41	14	39.5	PF1/2
BCM-15A-04G	1/2	21.7	12	9	25.5	36	32	43	14	41.5	PF1/2
BCM-15A-06G	1/2	21.7	16	9	31.5	36	32	46	16	42.5	PF3/4
BCM-20A-06G	3/4	27.2	16	10	31.5	46	41	50	16	48	PF3/4
BCM-20A-08G	3/4	27.2	22	10	38	46	41	52	18	48	PF1
BCM-25A-08G	1	34.0	22	11	38	55	46	54	18	53.5	PF1
BCM-25A-10G	1	34.0	28	11	48.5	55	50	57	20	54.5	PF1 1/4
BCM-32A-10G	1 1/4	42.7	31	12	48.5	65	60	63	20	63.5	PF1 1/4
BCM-32A-12G	1 1/4	42.7	34	12	53.5	65	60	64	21	63.5	PF1 1/2
BCM-40A-12G	1 1/2	48.6	36	12	53.5	75	65	65	21	65.5	PF1 1/2
BCM-40A-16G	1 1/2	48.6	40	12	66	75	70	73	25	69.5	PF2

• All dimensions in millimeters unless specified as “inch”. Dimension are for reference only, subject to change
• Dimensions given approximate length with tightened nut.

BCM-GO

Male Connector (For O-Ring)

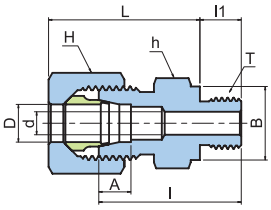

Part Number	Tube O.D. D		Dimension								
			d	A	B	H	h	l	l1	L	T
BCM-04-01GO	4		2.5	6	14	12	14	23	8	22.5	PF 1/8
BCM-06-01GO	6		4	7	14	14	14	28	8	30.5	PF 1/8
BCM-06-02GO	6		4	7	19	14	19	33	12	31.5	PF 1/4
BCM-08-01GO	8		4	7	14	17	17	28	8	30.5	PF 1/8
BCM-08-02GO	8		6	7	19	17	19	33	12	31.5	PF 1/4
BCM-10-02GO	10		6	7	19	19	19	33	12	32.5	PF 1/4
BCM-10-03GO	10		8	7	22	19	22	34	12	33.5	PF 3/8
BCM-12-02GO	12		6	7	19	22	19	33	12	32.5	PF 1/4
BCM-12-03GO	12		8	7	22	22	22	34	12	33.5	PF 3/8
BCM-12-04GO	12		10	7	27	22	27	39	14	36.5	PF 1/2
BCM-15-03GO	15		8	7.5	22	27	24	37	12	37.5	PF 3/8
BCM-15-04GO	15		12	7.5	27	27	27	41	14	39.5	PF 1/2
BCM-16-04GO	16		12	7.5	27	30	27	41	14	39.5	PF 1/2
BCM-18-04GO	18		12	8	27	32	27	41	14	39.5	PF 1/2
BCM-20-06GO	20		16	8	36	36	36	46	16	42.5	PF 3/4
BCM-22-04GO	22		12	9	27	36	32	43	14	41.5	PF 1/2
BCM-22-06GO	22		16	9	36	36	36	46	16	42.5	PF 3/4
BCM-25-06GO	25		16	10	36	41	36	46	16	43.5	PF 3/4
BCM-25-08GO	25		20	10	41	41	41	50	18	45.5	PF 1
BCM-28-08GO	28		22	10	41	46	41	52	18	48	PF 1
BCM-30-08GO	30		22	10	41	46	41	52	18	48.5	PF 1
BCM-30-10GO	30		25	10	50	46	50	57	20	51.5	PF 1 1/4
BCM-32-10GO	32		26	11	50	50	50	57	20	51.5	PF 1 1/4
BCM-35-10GO	35		28	11	50	55	50	57	20	54.5	PF 1 1/4
BCM-38-12GO	38		32	12	55	60	55	58	21	56.5	PF 1 1/2
BCM-40-12GO	40		32	12	55	60	55	62	21	60.5	PF 1 1/2
BCM-42-12GO	42		34	12	55	60	55	62	21	60.5	PF 1 1/2
BCM-50-16GO	50		40	12	75	75	70	73	25	69.5	PF 2
BCM-6A-01GO	1/8	10.5	4	7	14	19	17	29	8	32.5	PF 1/8
BCM-6A-02GO	1/8	10.5	6	7	19	19	19	33	12	32.5	PF 1/4
BCM-8A-02GO	1/4	13.8	6	7.5	19	24	22	36	12	36	PF 1/4
BCM-8A-03GO	1/4	13.8	8	7.5	22	24	22	36	12	36	PF 3/8
BCM-10A-03GO	3/8	17.3	8	8	22	32	27	38	12	38.5	PF 3/8
BCM-10A-04GO	3/8	17.3	12	8	27	32	27	41	14	39.5	PF 1/2
BCM-15A-04GO	1/2	21.7	12	9	27	36	32	43	14	41.5	PF 1/2
BCM-15A-06GO	1/2	21.7	16	9	36	36	36	46	16	42.5	PF 3/4
BCM-20A-06GO	3/4	27.2	16	10	36	46	41	50	16	48	PF 3/4
BCM-20A-08GO	3/4	27.2	22	10	41	46	41	52	18	48	PF 1
BCM-25A-08GO	1	34.0	22	11	41	55	46	54	18	53.5	PF 1
BCM-25A-10GO	1	34.0	28	11	50	55	50	57	20	54.5	PF 1 1/4
BCM-32A-10GO	1 1/4	42.7	31	12	50	65	60	63	20	63.5	PF 1 1/4
BCM-32A-12GO	1 1/4	42.7	34	12	55	65	60	64	21	63.5	PF 1 1/2
BCM-40A-12GO	1 1/2	48.6	36	12	55	75	65	65	21	65.5	PF 1 1/2
BCM-40A-16GO	1 1/2	48.6	40	12	75	75	75	73	25	69.5	PF 2

• All dimensions in millimeters unless specified as “inch”. Dimension are for reference only, subject to change
• Dimensions given approximate length with tightened nut.

BLCM

Long
Male Connector

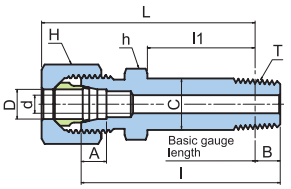

Part Number	Tube O.D. D	Dimension									
		d	A	B	C	H	h	l	l1	L	T
BLCM-04-01R	4	2.5	6	3.97	10.5	12	12	46	30	49.5	PT 1/8
BLCM-06-01R	6	4	7	3.97	10.5	14	14	63	41	69.5	PT 1/8
BLCM-08-02R	8	6	7	6.01	14	17	17	70	45	74.5	PT 1/4
BLCM-10-02R	10	7	7	6.01	14	19	17	71	46	76.5	PT 1/4
BLCM-10-03R	10	8	7	6.35	17.5	19	19	72	46.5	77	PT 3/8
BLCM-12-02R	12	7	7	6.01	14	22	19	71	46	76.5	PT 1/4
BLCM-12-03R	12	9	7	6.35	17.5	22	19	72	46.5	77	PT 3/8
BLCM-15-03R	15	9	7.5	6.35	17.5	27	24	81	52.5	87	PT 3/8
BLCM-15-04R	15	12	7.5	8.16	22	27	24	86	56	90.5	PT 1/2
BLCM-16-04R	16	12	7.5	8.16	22	30	27	86	56	90.5	PT 1/2
BLCM-18-04R	18	12	8	8.16	22	32	27	86	56	90.5	PT 1/2
BLCM-20-06R	20	16	8	9.53	27.5	36	30	92	58.5	95	PT 3/4
BLCM-22-06R	22	16	9	9.53	27.5	36	32	93	59.5	96	PT 3/4
BLCM-25-08R	25	20	10	10.39	34	41	36	99	63.5	102	PT 1
BLCM-28-08R	28	22	10	10.39	34	46	41	104	66.5	107.5	PT 1
BLCM-30-10R	30	25	10	12.70	42.5	46	46	109	68.5	111	PT 1 1/4
BLCM-32-10R	32	26	11	12.70	42.5	50	46	110	69.5	112	PT 1 1/4
BLCM-6A-02R	1/8 10.5	7	7	6.01	14	19	17	71	46	76.5	PT 1/4
BLCM-8A-03R	1/4 13.8	9	7.5	6.35	17.5	24	22	81	52.5	86.5	PT 3/8
BLCM-10A-03R	3/8 17.3	9	8	6.35	17.5	32	27	81	52.5	87	PT 3/8
BLCM-15A-04R	3/8 17.3	12	8	8.16	22	32	27	86	56	90.5	PT 1/2
BLCM-20A-06R	1/2 21.7	16	9	9.53	27.5	36	32	93	59.5	96	PT 3/4
BLCM-25A-08R	3/4 27.2	22	10	10.39	34	46	41	104	66.5	107.5	PT 1

• All dimensions in millimeters unless specified as “inch”. Dimension are for reference only, subject to change
• Dimensions given approximate length with tightened nut.

BME

Male Elbow

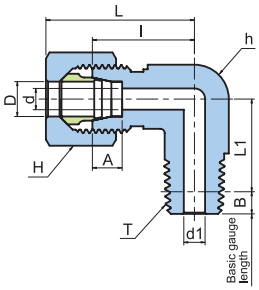

Part Number	Tube O.D. D	Dimension									
		d	d1	A	B	H	h	l	L	L1	T
BME-04-01R	4	2.5	4	6	3.97	12	12	17	22.5	14.7	PT 1/8
BME-06-01R	6	4	4	7	3.97	14	14	20	30.5	14	PT 1/8
BME-06-02R	6	4	7	7	6.01	14	17	23	33.5	17	PT 1/4
BME-08-01R	8	6	4	7	3.97	17	17	23	33.5	16	PT 1/8
BME-08-02R	8	6	7	7	6.01	17	17	23	33.5	18	PT 1/4
BME-10-02R	10	8	7	7	6.01	19	17	23	34.5	19	PT 1/4
BME-10-03R	10	8	9	7	6.35	19	19	24	35.5	19.5	PT 3/8
BME-10-04R	10	8	12	7	8.16	19	22	29	40.5	26	PT 1/2
BME-12-02R	12	10	7	7	6.01	22	19	24	35.5	20	PT 1/4
BME-12-03R	12	10	9	7	6.35	22	19	24	35.5	20.5	PT 3/8
BME-12-04R	12	10	12	7	8.16	22	24	29	40.5	26	PT 1/2
BME-15-03R	15	12	9	7.5	6.35	27	24	29	41.5	23.5	PT 3/8
BME-15-04R	15	12	12	7.5	8.16	27	24	29	41.5	26	PT 1/2
BME-16-03R	16	13	9	7.5	6.35	30	27	32	44.5	25.5	PT 3/8
BME-16-04R	16	13	12	7.5	8.16	30	27	32	44.5	27	PT 1/2
BME-18-03R	18	14	9	8	6.35	32	27	32	44.5	27.5	PT 3/8
BME-18-04R	18	14	12	8	8.16	32	27	32	44.5	30	PT 1/2
BME-20-04R	20	17	12	8	8.16	36	30	33	45.5	32	PT 1/2
BME-20-06R	20	17	16	8	9.53	36	30	33	45.5	30.5	PT 3/4
BME-22-04R	22	18	12	9	8.16	36	32	34	46.5	32	PT 1/2
BME-22-06R	22	18	16	9	9.53	36	32	34	46.5	32.5	PT 3/4
BME-25-06R	25	20	16	10	9.53	41	36	36	49.5	33.5	PT 3/4
BME-25-08R	25	20	22	10	10.39	41	36	36	49.5	35.5	PT 1
BME-28-06R	28	22	16	10	9.53	46	41	41	55	37.5	PT 3/4
BME-28-08R	28	22	22	10	10.39	46	41	41	55	39.5	PT 1
BME-30-08R	30	25	22	10	10.39	46	41	41	55.5	39.5	PT 1
BME-30-10R	30	25	31	10	12.70	46	46	46	60.5	42.5	PT 1 1/4
BME-32-10R	32	26	31	11	12.70	50	46	46	60.5	43.5	PT 1 1/4
BME-35-10R	35	28	31	11	12.70	55	46	46	63.5	45.5	PT 1 1/4
BME-38-12R	38	32	36	12	12.70	60	50	50	69.5	48.5	PT 1 1/2
BME-40-12R	40	32	36	12	12.70	60	55	55	74.5	49.5	PT 1 1/2
BME-42-12R	42	34	36	12	12.70	60	55	55	74.5	49.5	PT 1 1/2
BME-50-16R	50	40	46	12	15.88	75	65	62	83.5	58	PT 2
BME-6A-01R	1/8 10.5	8	4	7	3.97	19	17	23	34.5	17	PT 1/8
BME-6A-02R	1/8 10.5	8	7	7	6.01	19	17	23	34.5	19	PT 1/4
BME-8A-02R	1/4 13.8	11	7	7.5	6.01	24	22	28	40	22	PT 1/4
BME-8A-03R	1/4 13.8	11	9	7.5	6.35	24	22	28	40	22.5	PT 3/8
BME-10A-03R	3/8 17.3	14	9	8	6.35	32	27	32	44.5	27.5	PT 3/8
BME-10A-04R	3/8 17.3	14	12	8	8.16	32	27	32	44.5	30	PT 1/2
BME-15A-04R	1/2 21.7	18	12	9	8.16	36	32	34	46.5	32	PT 1/2
BME-15A-06R	1/2 21.7	18	16	9	9.53	36	32	34	46.5	32.5	PT 3/4
BME-20A-06R	3/4 27.2	22	16	10	9.53	46	41	41	55	37.5	PT 3/4
BME-20A-08R	3/4 27.2	22	22	10	10.39	46	41	41	55	39.5	PT 1
BME-25A-08R	1 34.0	28	22	11	10.39	55	46	46	63.5	44.5	PT 1
BME-25A-10R	1 34.0	28	31	11	12.70	55	46	46	63.5	45.5	PT 1 1/4
BME-32A-10R	1 1/4 42.7	34	31	12	12.70	65	60	57	77.5	51.5	PT 1 1/4
BME-32A-12R	1 1/4 42.7	34	36	12	12.70	75	60	57	77.5	51.5	PT 1 1/2
BME-40A-12R	1 1/2 48.6	40	36	12	12.70	75	65	62	83.5	57.5	PT 1 1/2
BME-40A-16R	1 1/2 48.6	40	46	12	15.88	75	65	62	83.5	58	PT 2

• All dimensions in millimeters unless specified as “inch”. Dimension are for reference only, subject to change
• Dimensions given approximate length with tightened nut.

BLME

Long Male Elbow

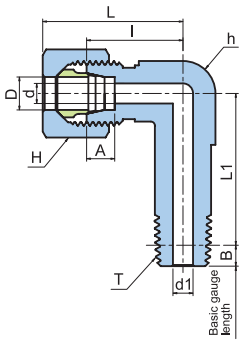

Part Number	Tube O.D. D	Dimension									
		d	d1	A	B	H	h	l	L	L1	T
BLME-06-01R	6	4	4	7	3.97	14	14	20	30.5	36	PT 1/8
BLME-08-02R	8	6	7	7	6.01	17	17	23	33.5	43	PT 1/4
BLME-10-02R	10	8	7	7	6.01	19	17	23	34.5	46	PT 1/4
BLME-12-02R	12	10	7	7	6.01	22	19	24	35.5	52	PT 1/4
BLME-12-03R	12	10	9	7	6.35	22	19	24	35.5	53	PT 3/8
BLME-15-03R	15	12	9	7.5	6.35	27	24	29	41.5	61.5	PT 3/8
BLME-15-04R	15	12	12	7.5	8.16	27	24	29	41.5	67	PT 1/2
BLME-16-04R	16	13	12	7.5	8.16	30	27	32	44.5	70	PT 1/2
BLME-18-04R	18	14	12	8	8.16	32	27	32	44.5	77	PT 1/2
BLME-20-06R	20	17	16	8	9.53	36	30	33	45.5	82.5	PT 3/4
BLME-22-06R	22	18	16	9	9.53	36	32	34	46.5	83.5	PT 3/4
BLME-25-06R	25	20	16	10	9.53	41	36	36	49.5	90.5	PT 3/4
BLME-25-08R	25	20	22	10	10.39	41	36	36	49.9	91.5	PT 1
BLME-28-08R	28	22	22	10	10.39	46	41	41	55	104.5	PT 1
BLME-30-10R	30	25	31	10	12.70	46	46	46	60.5	104.5	PT 1 1/4
BLME-32-10R	32	26	31	11	12.70	50	46	46	60.5	104.5	PT 1 1/4
BLME-35-10R	35	28	31	11	12.70	55	46	46	63.5	121.5	PT 1 1/4

BPME

Positionable Male Elbow

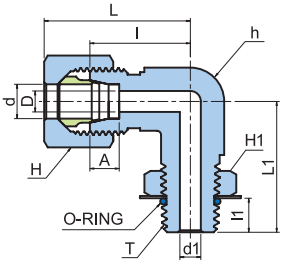

Part Number	Tube O.D. D	Dimension										
		d	d1	A	H	H1	h	l	l1	L	L1	T
BPME-06-01G	6	4	4	7	14	14	14	20	10	30.5	30	PF 1/8
BPME-08-02G	8	6	6	7	17	19	17	23	12	33.5	34	PF 1/4
BPME-10-02G	10	8	6	7	19	19	17	23	12	34.5	35	PF 1/4
BPME-12-02G	12	10	6	7	22	19	19	24	12	35.5	36	PF 1/4
BPME-12-03G	12	10	9	7	22	22	19	24	12	35.5	36	PF 3/8
BPME-12-04G	12	10	12	7	22	27	24	24	16	35.5	46	PF 1/2
BPME-15-03G	15	12	9	7.5	27	22	24	29	12	41.5	40	PF 3/8
BPME-15-04G	15	12	12	7.5	27	27	24	29	16	41.5	46	PF 1/2
BPME-16-04G	16	13	12	7.5	30	27	24	32	16	44.5	46	PF 1/2
BPME-18-04G	18	14	12	8	32	27	30	32	16	44.5	52	PF 1/2
BPME-20-06G	20	17	16	8	36	36	30	33	17	45.5	52	PF 3/4
BPME-22-06G	22	18	16	9	36	36	32	34	17	46.5	52	PF 3/4
BPME-25-06G	25	20	16	10	41	36	36	36	17	49.5	60	PF 3/4
BPME-25-08G	25	20	22	10	41	41	36	36	21	49.5	62	PF 1
BPME-28-08G	28	22	22	10	46	41	41	41	21	55	62	PF 1
BPME-30-08G	30	25	22	10	46	41	41	41	21	55.5	66	PF 1
BPME-30-10G	30	25	31	10	46	50	46	44	21	58.5	66	PF 1 1/4
BPME-32-10G	32	26	31	11	50	50	46	46	21	60.5	66	PF 1 1/4
BPME-35-10G	35	28	31	11	55	50	46	46	21	63.5	66	PF 1 1/4
BPME-38-12G	38	32	36	12	60	55	50	50	21	69.5	73	PF 1 1/2

• All dimensions in millimeters unless specified as “inch”. Dimension are for reference only, subject to change
• Dimensions given approximate length with tightened nut.

BBE

Banjo Elbow

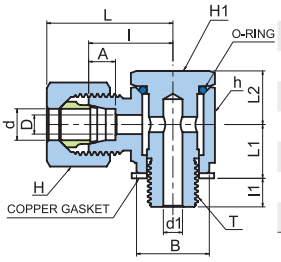

Part Number	Tube O.D. D		Dimension													
			d	d1	A	B	H	H1	h	I	I1	L	L1	L2	O-Ring	T
BBE-06-01G	6		4	4	7	14	14	17	17	23	8	33.5	13	14	P10	PF1/8
BBE-08-02G	8		6	7	7	18	17	22	22	25	12	35.5	16	17	P12	PF1/4
BBE-10-02G	10		8	7	7	18	19	22	22	25	12	36.5	16	17	P12	PF1/4
BBE-12-03G	12		10	9	7	21.5	22	27	27	29	12	40.5	19	22	P18	PF3/8
BBE-15-04G	15		12	12	7.5	25.5	27	30	36	36	14	48.5	24	28	P22	PF1/2
BBE-16-04G	16		13	12	7.5	25.5	30	30	36	36	14	48.5	24	28	P22	PF1/2
BBE-18-04G	18		14	12	8	25.5	32	30	36	36	14	48.5	24	28	P22	PF1/2
BBE-20-06G	20		17	16	8	31.5	36	41	41	38	16	50.5	28	32	P28	PF3/4
BBE-22-06G	22		18	16	9	31.5	36	41	42	38	16	50.5	28	32	P28	PF3/4
BBE-25-08G	25		20	22	10	38	41	50	50	42	18	55.5	37	38	P36	PF1
BBE-28-08G	28		22	22	10	38	46	50	50	42	18	56	37	38	P36	PF1
BBE-6A-02G	1/8	10.5	8	7	7	18	19	22	22	25	12	36.5	16	17	P12	PF1/4
BBE-8A-03G	1/4	13.8	11	9	7.5	21.5	24	27	27	29	12	41	19	22	P18	PF3/8
BBE-10A-04G	3/8	17.3	14	12	8	25.5	32	30	36	36	14	48.5	24	28	P22	PF1/2
BBE-15A-06G	1/2	21.7	18	16	9	31.5	36	41	41	38	16	50.5	28	32	P28	PF3/4
BBE-20A-08G	3/4	27.2	22	22	10	38	46	50	50	42	18	56	37	38	P36	PF1

BMBT

Male Branch Tee

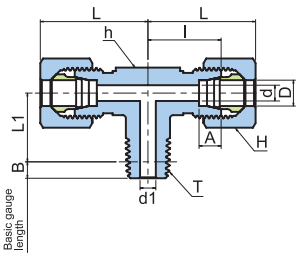

Part Number	Tube O.D. D		Dimension									
			d	d1	A	B	H	h	I	L	L1	T
BMBT-04-01R	4		2.5	4	6	3.97	12	12	15	22.5	13	PT 1/8
BMBT-06-01R	6		4	4	7	3.97	14	14	20	30.5	14	PT 1/8
BMBT-06-02R	6		4	7	7	6.01	14	17	23	33.5	17	PT 1/4
BMBT-08-01R	8		6	4	7	3.97	17	17	23	33.5	16	PT 1/8
BMBT-08-02R	8		6	7	7	6.01	17	17	23	33.5	18	PT 1/4
BMBT-10-02R	10		8	7	7	6.01	19	17	23	34.5	19	PT 1/4
BMBT-10-03R	10		8	9	7	6.35	19	19	24	35.5	19.5	PT 3/8
BMBT-12-02R	12		10	7	7	6.01	22	19	24	35.5	18	PT 1/4
BMBT-12-03R	12		10	9	7	6.35	22	19	24	35.5	20.5	PT 3/8
BMBT-15-03R	15		12	9	7.5	6.35	27	24	29	41.5	23.5	PT 3/8
BMBT-15-04R	15		12	12	7.5	8.16	27	24	29	41.5	26	PT 1/2
BMBT-16-04R	16		13	12	7.5	8.16	30	27	32	44.5	27	PT 1/2
BMBT-18-04R	18		14	12	8	8.16	32	27	32	44.5	30	PT 1/2
BMBT-20-06R	20		17	16	8	9.53	36	30	33	45.5	30.5	PT 3/4
BMBT-22-06R	22		18	16	9	9.53	36	32	34	46.5	32.5	PT 3/4
BMBT-25-06R	25		20	16	10	9.53	41	36	36	49.5	33.5	PT 3/4
BMBT-25-08R	25		20	22	10	10.39	41	36	36	49.5	35.5	PT 1
BMBT-28-08R	28		22	22	10	10.39	46	41	41	55	39.5	PT 1
BMBT-30-08R	30		25	22	10	10.39	46	41	41	55.5	39.5	PT 1
BMBT-30-10R	30		25	31	10	12.70	46	46	46	60.5	42.5	PT 1 1/4
BMBT-32-10R	32		26	31	11	12.70	50	46	46	60.5	43.5	PT 1 1/4
BMBT-35-10R	35		28	31	11	12.70	55	46	46	63.5	45.5	PT 1 1/4
BMBT-38-12R	38		32	36	12	12.70	60	50	50	69.5	48.5	PT 1 1/2
BMBT-40-12R	40		32	36	12	12.70	60	55	55	74.5	49.5	PT 1 1/2
BMBT-50-16R	50		40	46	12	15.88	75	65	62	83.5	58	PT 2
BMBT-6A-02R	1/8	10.5	8	7	7	6.01	19	17	23	34.5	19	PT 1/4
BMBT-8A-03R	1/4	13.8	11	9	7.5	6.35	24	22	28	40	22.5	PT 3/8
BMBT-10A-04R	3/8	17.3	14	12	8	8.16	32	27	32	44.5	30	PT 1/2
BMBT-15A-06R	1/2	21.7	18	16	9	9.53	36	32	34	46.5	32.5	PT 3/4
BMBT-20A-08R	3/4	27.2	22	22	10	10.39	46	41	41	55	39.5	PT 1
BMBT-25A-10R	1	34.0	28	31	11	12.70	55	46	46	63.5	45.5	PT 1 1/4
BMBT-32A-12R	1 1/4	42.7	34	36	12	12.70	65	60	57	77.5	51.5	PT 1 1/2
BMBT-40A-16R	1 1/2	48.6	40	46	12	15.88	75	65	62	83.5	58	PT 2

• All dimensions in millimeters unless specified as “inch”. Dimension are for reference only, subject to change
• Dimensions given approximate length with tightened nut.

BMRT

Male Run Tee

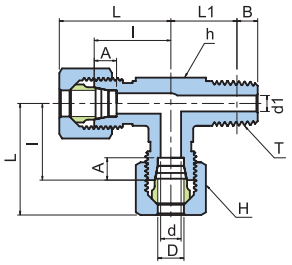

Part Number	Tube O.D. D		Dimension									
			d	d1	A	B	H	h	l	L	L1	T
BMRT-04-01R	4		2.5	4	6	3.97	12	12	15	22.5	13	PT 1/8
BMRT-06-01R	6		4	4	7	3.97	14	14	20	30.5	14	PT 1/8
BMRT-06-02R	6		4	7	7	6.01	14	17	23	33.5	17	PT 1/4
BMRT-08-01R	8		6	4	7	3.97	17	17	23	33.5	16	PT 1/8
BMRT-08-02R	8		6	7	7	6.01	17	17	23	33.5	18	PT 1/4
BMRT-10-02R	10		8	7	7	6.01	19	17	23	34.5	19	PT 1/4
BMRT-10-03R	10		8	9	7	6.35	19	19	24	35.5	19.5	PT 3/8
BMRT-12-02R	12		10	7	7	6.01	22	19	24	35.5	18	PT 1/4
BMRT-12-03R	12		10	9	7	6.35	22	19	24	35.5	20.5	PT 3/8
BMRT-15-03R	15		12	9	7.5	6.35	27	24	29	41.5	23.5	PT 3/8
BMRT-15-04R	15		12	12	7.5	8.16	27	24	29	41.5	26	PT 1/2
BMRT-16-04R	16		13	12	7.5	8.16	30	27	32	44.5	27	PT 1/2
BMRT-18-04R	18		14	12	8	8.16	32	27	32	44.5	30	PT 1/2
BMRT-20-06R	20		17	16	8	9.53	36	30	33	45.5	30.5	PT 3/4
BMRT-22-06R	22		18	16	9	9.53	36	32	34	46.5	32.5	PT 3/4
BMRT-25-06R	25		20	16	10	9.53	41	36	36	49.5	33.5	PT 3/4
BMRT-25-08R	25		20	22	10	10.39	41	36	36	49.5	35.5	PT 1
BMRT-28-08R	28		22	22	10	10.39	46	41	41	55	39.5	PT 1
BMRT-30-08R	30		25	22	10	10.39	46	41	41	55.5	39.5	PT 1
BMRT-30-10R	30		25	31	10	12.70	46	46	46	60.5	42.5	PT 1 1/4
BMRT-32-10R	32		26	31	11	12.70	50	46	46	60.5	43.5	PT 1 1/4
BMRT-35-10R	35		28	31	11	12.70	55	46	46	63.5	45.5	PT 1 1/4
BMRT-38-12R	38		32	36	12	12.70	60	50	50	69.5	48.5	PT 1 1/2
BMRT-40-12R	40		32	36	12	12.70	60	55	55	74.5	49.5	PT 1 1/2
BMRT-50-16R	50		40	46	12	15.88	75	65	62	83.5	58	PT 2
BMRT-6A-02R	1/8	10.5	8	7	7	6.01	19	17	23	34.5	19	PT 1/4
BMRT-8A-03R	1/4	13.8	11	9	7.5	6.35	24	22	28	40	22.5	PT 3/8
BMRT-10A-04R	3/8	17.3	14	12	8	8.16	32	27	32	44.5	30	PT 1/2
BMRT-15A-06R	1/2	21.7	18	16	9	9.53	36	32	34	46.5	32.5	PT 3/4
BMRT-20A-08R	3/4	27.2	22	22	10	10.39	46	41	41	55	39.5	PT 1
BMRT-25A-10R	1	34.0	28	31	11	12.70	55	46	46	63.5	45.5	PT 1 1/4
BMRT-32A-12R	1 1/4	42.7	34	36	12	12.70	65	60	57	77.5	51.5	PT 1 1/2
BMRT-40A-16R	1 1/2	48.6	40	46	12	15.88	75	65	62	83.5	58	PT 2

• All dimensions in millimeters unless specified as “inch”. Dimension are for reference only, subject to change
• Dimensions given approximate length with tightened nut.

BCF

Female Connector

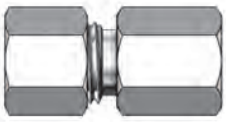

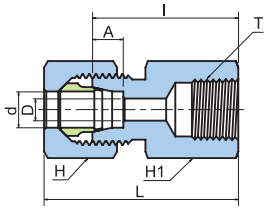

Part Number	Tube O.D. D		Dimension						
			d	A	H	H1	I	L	T
BCF-06-01R	6		4	7	14	17	25	35.5	PT 1/8
BCF-08-02R	8		6	7	17	19	30	40.5	PT 1/4
BCF-10-02R	10		8	7	19	19	30	41.5	PT 1/4
BCF-10-03R	10		8	7	19	24	32	43.5	PT 3/8
BCF-12-02R	12		10	7	22	19	30	41.5	PT 1/4
BCF-12-03R	12		10	7	22	24	32	43.5	PT 3/8
BCF-15-03R	15		12	7.5	27	24	34	46.5	PT 3/8
BCF-15-04R	15		12	7.5	27	30	39	51.5	PT 1/2
BCF-16-04R	16		13	7.5	30	30	39	51.5	PT 1/2
BCF-18-04R	18		14	8	32	30	39	51.5	PT 1/2
BCF-20-06R	20		17	8	36	36	41	53.5	PT 3/4
BCF-22-06R	22		18	9	36	36	41	53.5	PT 3/4
BCF-25-06R	25		20	10	41	36	41	54.5	PT 3/4
BCF-25-08R	25		20	10	41	46	45	58.5	PT 1
BCF-28-08R	28		22	10	46	46	47	61	PT 1
BCF-30-08R	30		25	10	46	46	47	61.5	PT 1
BCF-30-10R	30		25	10	46	55	51	65.5	PT 1 1/4
BCF-32-10R	32		26	11	50	55	51	65.5	PT 1 1/4
BCF-35-10R	35		28	11	55	55	51	68.5	PT 1 1/4
BCF-38-12R	38		32	12	60	65	51	70.5	PT 1 1/2
BCF-40-12R	40		32	12	60	65	55	74.5	PT 1 1/2
BCF-42-12R	42		34	12	60	65	55	74.5	PT 1 1/2
BCF-50-16R	50		40	12	75	80	60	81.5	PT 2
BCF-6A-02R	1/8	10.5	8	7	19	19	30	41.5	PT 1/4
BCF-8A-03R	1/4	13.8	11	7.5	24	24	34	46	PT 3/8
BCF-10A-04R	3/8	17.3	14	8	32	30	39	51.5	PT 1/2
BCF-15A-06R	1/2	21.7	18	9	36	36	41	53.5	PT 3/4
BCF-20A-08R	3/4	27.2	22	10	46	46	47	61	PT 1
BCF-25A-10R	1	34.0	28	11	55	55	51	68.5	PT 1 1/4
BCF-32A-12R	1 1/4	42.7	34	12	65	65	55	78.5	PT 1 1/2
BCF-40A-16R	1 1/2	48.6	40	12	75	80	60	81.5	PT 2

BBCF

Bulkhead Female Connector

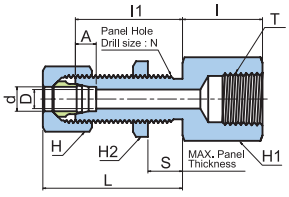

Part Number	Tube O.D. D	Dimension										
		d	A	H	H1	H2	I	I1	L	S	N	T
BBCF-06-01R	6	4	7	14	17	17	13	32	42.5	13	12.5	PT 1/8
BBCF-08-02R	8	6	7	17	19	19	18	32	42.5	13	14.5	PT 1/4
BBCF-10-02R	10	8	7	19	19	22	18	32	43.5	13	16.5	PT 1/4
BBCF-10-03R	10	8	7	19	24	22	20	32	43.5	13	16.5	PT 3/8
BBCF-12-02R	12	10	7	22	19	24	18	32	43.5	13	18.5	PT 1/4
BBCF-12-03R	12	10	7	22	24	24	20	32	43.5	13	18.5	PT 3/8
BBCF-15-03R	15	12	7.5	27	24	27	20	37	49.5	15	22.5	PT 3/8
BBCF-15-04R	15	12	7.5	27	30	27	25	37	49.5	15	22.5	PT 1/2
BBCF-16-04R	16	13	7.5	30	30	30	25	37	49.5	15	24.5	PT 1/2
BBCF-18-04R	18	14	8	32	30	32	25	39	51.5	15	26.5	PT 1/2
BBCF-20-06R	20	17	8	36	36	32	27	39	51.5	15	28.5	PT 3/4
BBCF-22-06R	22	18	9	36	36	36	27	39	51.5	15	30.5	PT 3/4
BBCF-25-06R	25	20	10	41	41	41	27	39	52.5	15	35.5	PT 3/4
BBCF-25-08R	25	20	10	41	46	41	31	39	52.5	15	35.5	PT 1
BBCF-28-08R	28	22	10	46	46	46	31	41	55	15	38.5	PT 1
BBCF-30-08R	30	25	10	46	46	46	31	41	55.5	15	40.5	PT 1
BBCF-30-10R	30	25	10	46	55	46	35	41	55.5	15	40.5	PT 1 1/4
BBCF-32-10R	32	26	11	50	55	46	35	43	57.5	15	42.5	PT 1 1/4

• All dimensions in millimeters unless specified as “inch”. Dimension are for reference only, subject to change
• Dimensions given approximate length with tightened nut.

BFGC

Female Gauge Connector

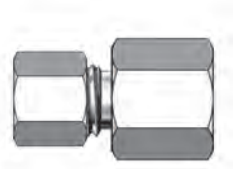

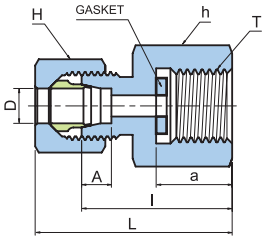

Part Number	Tube O.D. D	a	A	H	h	I	L	T
BFGC-04-02G	4	14	6	12	19	29	36.5	PF 1/4
BFGC-04-03G	4	15	6	12	24	30	37.5	PF 3/8
BFGC-06-02G	6	14	7	14	19	32	42.5	PF 1/4
BFGC-06-03G	6	15	7	14	24	34	44.5	PF 3/8
BFGC-06-04G	6	16	7	14	30	36	46.5	PF 1/2
BFGC-08-02G	8	14	7	17	19	32	42.5	PF 1/4
BFGC-08-03G	8	15	7	17	24	34	44.5	PF 3/8
BFGC-08-04G	8	16	7	17	30	36	46.5	PF 1/2
BFGC-10-02G	10	14	7	19	19	32	43.5	PF 1/4
BFGC-10-03G	10	15	7	19	24	34	45.5	PF 3/8
BFGC-10-04G	10	16	7	19	30	36	47.5	PF 1/2
BFGC-12-02G	12	14	7	22	19	32	43.5	PF 1/4
BFGC-12-03G	12	15	7	22	24	34	45.5	PF 3/8
BFGC-12-04G	12	16	7	22	30	36	47.5	PF 1/2

BFE

Female Elbow

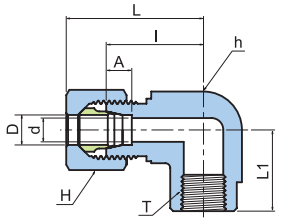

Part Number	Tube O.D. D	d	A	H	h	I	L	L1	T
BFE-08-02R	8	6	7	17	19	24	34.5	24	PT 1/4
BFE-10-02R	10	8	7	19	19	24	35.5	24	PT 1/4
BFE-12-02R	12	10	7	22	19	24	35.5	24	PT 1/4
BFE-12-03R	12	10	7	22	24	29	40.5	29	PT 3/8
BFE-15-03R	15	12	7.5	27	24	29	41.5	29	PT 3/8
BFE-15-04R	15	12	7.5	27	30	33	45.5	33	PT 1/2
BFE-16-04R	16	13	7.5	30	30	33	45.5	33	PT 1/2
BFE-18-04R	18	14	8	32	30	33	45.5	33	PT 1/2
BFE-20-06R	20	17	8	36	36	36	48.5	36	PT 3/4
BFE-22-06R	22	18	9	36	36	36	48.5	36	PT 3/4
BFE-25-06R	25	20	10	41	36	36	49.5	36	PT 3/4
BFE-25-08R	25	20	10	41	46	46	59.5	46	PT 1
BFE-28-08R	28	22	10	46	46	46	60	46	PT 1
BFE-30-10R	30	25	10	46	55	55	69.5	55	PT 1 1/4
BFE-32-10R	32	26	11	50	55	55	69.5	55	PT 1 1/4
BFE-35-10R	35	28	11	55	55	55	72.5	55	PT 1 1/4

• All dimensions in millimeters unless specified as “inch”. Dimension are for reference only, subject to change
• Dimensions given approximate length with tightened nut.

BFBT

Female Branch Tee

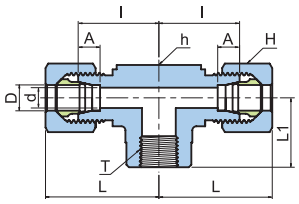

Part Number	Tube O.D. D	d	A	H	h	I	L	L1	T
BFBT-08-02R	8	6	7	17	19	24	34.5	24	PT 1/4
BFBT-10-02R	10	8	7	19	19	24	35.5	24	PT 1/4
BFBT-12-02R	12	10	7	22	19	24	35.5	24	PT 1/4
BFBT-12-03R	12	10	7	22	24	29	40.5	29	PT 3/8
BFBT-15-03R	15	12	7.5	27	24	29	41.5	29	PT 3/8
BFBT-15-04R	15	12	7.5	27	30	33	45.5	33	PT 1/2
BFBT-16-04R	16	13	7.5	30	30	33	45.5	33	PT 1/2
BFBT-18-04R	18	14	8	32	30	33	45.5	33	PT 1/2
BFBT-20-06R	20	17	8	36	36	36	48.5	36	PT 3/4
BFBT-22-06R	22	18	9	36	36	36	48.5	36	PT 3/4
BFBT-25-06R	25	20	10	41	36	36	49.5	36	PT 3/4
BFBT-25-08R	25	20	10	41	46	46	59.5	46	PT 1
BFBT-28-08R	28	22	10	46	46	46	60	46	PT 1
BFBT-30-08R	30	25	10	46	46	46	60.5	46	PT 1
BFBT-30-10R	30	25	10	46	55	55	69.5	55	PT 1 1/4
BFBT-32-10R	32	26	11	50	55	55	69.5	55	PT 1 1/4
BFBT-35-10R	35	28	11	55	55	55	72.5	55	PT 1 1/4
BFBT-6A-02R	1/8 10.5	8	7	19	19	24	35.5	24	PT 1/4
BFBT-8A-03R	1/4 13.8	11	7.5	24	24	29	41	29	PT 3/8
BFBT-10A-04R	3/8 17.3	14	8	32	30	33	45.5	33	PT 1/2
BFBT-15A-06R	1/2 21.7	18	9	36	36	36	48.5	36	PT 3/4
BFBT-20A-08R	3/4 27.2	22	10	46	46	46	60	46	PT 1
BFBT-25A-10R	1 34.0	28	11	55	55	55	72.5	55	PT 1 1/4

BFRT

Female Run Tee

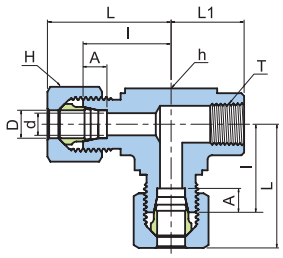

Part Number	Tube O.D. D	d	A	H	h	I	L	L1	T
BFRT-08-02R	8	6	7	17	19	24	34.5	24	PT 1/4
BFRT-10-02R	10	8	7	19	19	24	35.5	24	PT 1/4
BFRT-12-02R	12	10	7	22	19	24	35.5	24	PT 1/4
BFRT-12-03R	12	10	7	22	24	29	40.5	29	PT 3/8
BFRT-15-03R	15	12	7.5	27	24	29	41.5	29	PT 3/8
BFRT-15-04R	15	12	7.5	27	30	33	45.5	33	PT 1/2
BFRT-16-04R	16	13	7.5	30	30	33	45.5	33	PT 1/2
BFRT-18-04R	18	14	8	32	30	33	45.5	33	PT 1/2
BFRT-20-06R	20	17	8	36	36	36	48.5	36	PT 3/4
BFRT-22-06R	22	18	9	36	36	36	48.5	36	PT 3/4
BFRT-25-06R	25	20	10	41	36	36	49.5	36	PT 3/4
BFRT-25-08R	25	20	10	41	46	46	59.5	46	PT 1
BFRT-28-08R	28	22	10	46	46	46	60	46	PT 1
BFRT-30-08R	30	25	10	46	46	46	60.5	46	PT 1
BFRT-30-10R	30	25	10	46	55	55	69.5	55	PT 1 1/4
BFRT-32-10R	32	26	11	50	55	55	69.5	55	PT 1 1/4
BFRT-35-10R	35	28	11	55	55	55	72.5	55	PT 1 1/4
BFRT-6A-02R	1/8 10.5	8	7	19	19	24	35.5	24	PT 1/4
BFRT-8A-03R	1/4 13.8	11	7.5	24	24	29	41	29	PT 3/8
BFRT-10A-04R	3/8 17.3	14	8	32	30	33	45.5	33	PT 1/2
BFRT-15A-06R	1/2 21.7	18	9	36	36	36	48.5	36	PT 3/4
BFRT-20A-08R	3/4 27.2	22	10	46	46	46	60	46	PT 1
BFRT-25A-10R	1 34.0	28	11	55	55	55	72.5	55	PT 1 1/4

• All dimensions in millimeters unless specified as “inch”. Dimension are for reference only, subject to change
• Dimensions given approximate length with tightened nut.

BC
Cap

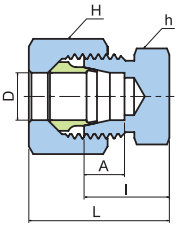

Part Number	Tube O.D. D	A	H	h	l	L
BC-06	6	7	14	14	18	28.5
BC-08	8	7	17	17	19	29.5
BC-10	10	7	19	17	20	31.5
BC-12	12	7	22	19	20	31.5
BC-15	15	7.5	27	24	22	34.5
BC-16	16	7.5	30	27	24	36.5
BC-18	18	8	32	27	24	36.5
BC-20	20	8	36	30	24	36.5
BC-22	22	9	36	32	25	37.5
BC-25	25	10	41	36	25	38.5
BC-28	28	10	46	41	28	42
BC-30	30	10	46	41	28	42.5
BC-32	32	11	50	46	30	44.5

BPL
Plug

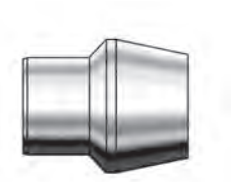

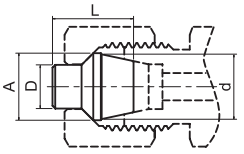

Part Number	Tube O.D. D	A	d	L
BPL-06	6	9	8	13.5
BPL-08	8	11	10	13.5
BPL-10	10	13	12	14.5
BPL-12	12	15	14	14.5
BPL-15	15	18	17	16
BPL-16	16	19	18	16
BPL-18	18	21	20	17.5
BPL-20	20	23	22	17.5
BPL-22	22	25	24	17.5
BPL-25	25	28.5	27.4	19
BPL-28	28	31.5	30.4	19
BPL-30	30	33.5	32.4	20
BPL-32	32	35.5	34.4	20

• All dimensions in millimeters unless specified as “inch”. Dimension are for reference only, subject to change
• Dimensions given approximate length with tightened nut.

BNT
Nut

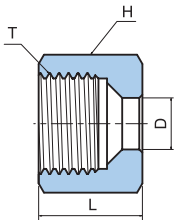

Part Number	Tube O.D. D	H	L	T
BNT-04	4	12	10.5	M10X1.25
BNT-06	6	14	15	M12X1.5
BNT-08	8	17	15	M14X1.5
BNT-10	10	19	16	M16X1.5
BNT-12	12	22	16	M18X1.5
BNT-15	15	27	19	M22X1.5
BNT-16	16	30	19	M24X1.5
BNT-18	18	32	19	M26X1.5
BNT-20	20	36	19	M28X1.5
BNT-22	22	36	19	M30X1.5
BNT-25	25	41	20	M35X1.5
BNT-28	28	46	21	M38X1.5
BNT-30	30	46	22	M40X1.5
BNT-32	32	50	22	M42X1.5
BNT-35	35	55	25	M45X1.5
BNT-38	38	60	27	M48X1.5
BNT-40	40	60	29.5	M52X2
BNT-42	42	60	29.5	M52X2
BNT-50	50	75	31.5	M64X2
BNT-6A	1/8 10.5	19	16	M16X1.5
BNT-8A	1/4 13.8	24	18	M20X1.5
BNT-10A	3/8 17.3	32	19	M26X1.5
BNT-15A	1/2 21.7	36	19	M30X1.5
BNT-20A	3/4 27.2	46	21	M38X1.5
BNT-25A	1 34.0	55	25	M45X1.5
BNT-32A	1 1/4 42.7	65	30.5	M56X2
BNT-40A	1 1/2 48.6	75	31.5	M64X2

BCR
Sleeve

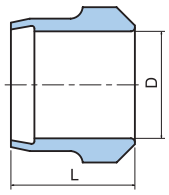

Part Number	Tube O.D. D	L	Part Number	Tube O.D. D	L
BCR-04	4	7	BS-35	35	14
BCR-06	6	9	BS-38	38	14
BCR-08	8	9	BS-40	40	14
BCR-10	10	10	BS-42	42	14
BCR-12	12	10	BS-50	50	14
BCR-15	15	10	BS-6A	1/8 10.5	10
BCR-16	16	10	BS-8A	1/4 13.8	10
BCR-18	18	10	BS-10A	3/8 17.3	10
BCR-20	20	10	BS-15A	1/2 21.7	10
BCR-22	22	10	BS-20A	3/4 27.2	11
BCR-25	25	11	BS-25A	1 34.0	14
BCR-28	28	11	BS-30A	1 1/4 42.7	14
BCR-30	30	11	BS-40A	1 1/2 48.6	14
BCR-32	32	11			

• All dimensions in millimeters unless specified as “inch”. Dimension are for reference only, subject to change
• Dimensions given approximate length with tightened nut.

BHMU

Hose
Male Union

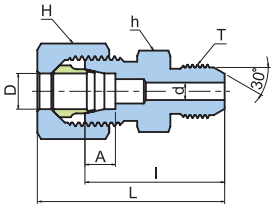

Part Number	Tube O.D. D	d	A	H	h	l	L	T
BHMU-08-02G	8	6	7	17	17	35	45.5	PF 1/4
BHMU-08-03G	8	6	7	17	19	37	47.5	PF 3/8
BHMU-10-02G	10	6	7	19	17	35	46.5	PF 1/4
BHMU-10-03G	10	8	7	19	19	37	48.5	PF 3/8
BHMU-10-04G	10	8	7	19	22	40	51.5	PF 1/2
BHMU-12-02G	12	6	7	22	19	35	46.5	PF 1/4
BHMU-12-03G	12	9	7	22	19	37	48.5	PF 3/8
BHMU-12-04G	12	10	7	22	22	40	51.5	PF 1/2
BHMU-15-03G	15	9	7.5	27	24	40	52.5	PF 3/8
BHMU-15-04G	15	12	7.5	27	24	42	54.5	PF 1/2
BHMU-16-03G	16	9	7.5	30	27	40	52.5	PF 3/8
BHMU-16-04G	16	12	7.5	30	27	42	54.5	PF 1/2
BHMU-18-04G	18	12	8	32	27	42	54.5	PF 1/2
BHMU-20-06G	20	16	8	36	30	46	58.5	PF 3/4
BHMU-22-04G	22	12	9	36	32	44	56.5	PF 1/2
BHMU-22-06G	22	16	9	36	32	46	58.5	PF 3/4
BHMU-25-06G	25	16	10	41	36	47	60.5	PF 3/4
BHMU-25-08G	25	20	10	41	36	49	62.5	PF 1
BHMU-28-06G	28	16	10	46	41	49	63	PF 3/4
BHMU-28-08G	28	22	10	46	41	51	65	PF 1
BHMU-30-06G	30	16	10	46	41	49	63.5	PF 3/4
BHMU-30-08G	30	22	10	46	41	51	65.5	PF 1
BHMU-32-08G	32	22	11	50	46	52	66.5	PF 1
BHMU-32-10G	32	28	11	50	46	56	70.5	PF 1 1/4

BHFU

Hose
Female Union

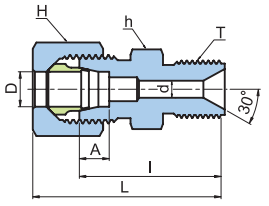

Part Number	Tube O.D. D	d	A	H	h	l	L	T
BHFU-08-02G	8	6	7	17	17	33	43.5	PF 1/4
BHFU-08-03G	8	6	7	17	19	34	44.5	PF 3/8
BHFU-10-02G	10	6	7	19	17	33	44.5	PF 1/4
BHFU-10-03G	10	8	7	19	19	34	45.5	PF 3/8
BHFU-10-04G	10	8	7	19	22	38	49.5	PF 1/2
BHFU-12-02G	12	6	7	22	19	33	44.5	PF 1/4
BHFU-12-03G	12	9	7	22	19	34	45.5	PF 3/8
BHFU-12-04G	12	10	7	22	22	38	49.5	PF 1/2
BHFU-15-03G	15	9	7.5	27	24	37	49.5	PF 3/8
BHFU-15-04G	15	12	7.5	27	24	40	52.5	PF 1/2
BHFU-16-03G	16	9	7.5	30	27	37	49.5	PF 3/8
BHFU-16-04G	16	12	7.5	30	27	40	52.5	PF 1/2
BHFU-18-04G	18	12	8	32	27	40	52.5	PF 1/2
BHFU-20-06G	20	16	8	36	30	43	55.5	PF 3/4
BHFU-22-04G	22	12	9	36	32	42	54.5	PF 1/2
BHFU-22-06G	22	16	9	36	32	43	55.5	PF 3/4
BHFU-25-06G	25	16	10	41	36	44	57.5	PF 3/4
BHFU-25-08G	25	20	10	41	36	46	59.5	PF 1
BHFU-28-06G	28	16	10	46	41	46	60	PF 3/4
BHFU-28-08G	28	22	10	46	41	48	62	PF 1
BHFU-30-06G	30	16	10	46	41	46	60.5	PF 3/4
BHFU-30-08G	30	22	10	46	41	48	62.5	PF 1
BHFU-32-08G	32	22	11	50	46	49	63.5	PF 1
BHFU-32-10G	32	28	11	50	46	55	69.5	PF 1 1/4
BHFU-38-12G	38	32	12	60	50	57	76.5	PF 1 1/2
BHFU-40-12G	40	32	12	60	55	62	81.5	PF 1 1/2
BHFU-50-16G	50	40	12	75	65	70	91.5	PF 2

• All dimensions in millimeters unless specified as “inch”. Dimension are for reference only, subject to change
• Dimensions given approximate length with tightened nut.

BHBMU

Hose Bulkhead Male Union

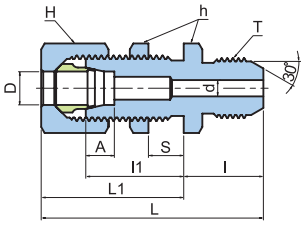

Part Number	Tube O.D. D	d	A	H	h	l	l1	L	L1	Panel Hole Drill Size	Max. Panel Thickness S	T
BHBMU-08-02G	8	6	7	17	19	23	32	65.5	42.5	14.5	13	PF 1/4
BHBMU-08-03G	8	6	7	17	19	25	32	67.5	42.5	14.5	13	PF 3/8
BHBMU-10-02G	10	6	7	19	22	24	32	67.5	43.5	16.5	13	PF 1/4
BHBMU-10-03G	10	8	7	19	22	26	32	69.5	43.5	16.5	13	PF 3/8
BHBMU-10-04G	10	8	7	19	22	28	32	71.5	43.5	16.5	13	PF 1/2
BHBMU-12-02G	12	6	7	22	24	24	32	67.5	43.5	18.5	13	PF 1/4
BHBMU-12-03G	12	9	7	22	24	26	32	69.5	43.5	18.5	13	PF 3/8
BHBMU-12-04G	12	10	7	22	24	28	32	71.5	43.5	18.5	13	PF 1/2
BHBMU-15-03G	15	9	7.5	27	27	26	37	75.5	49.5	22.5	15	PF 3/8
BHBMU-15-04G	15	12	7.5	27	27	28	37	77.5	49.5	22.5	15	PF 1/2
BHBMU-16-03G	16	9	7.5	30	30	28	37	77.5	49.5	24.5	15	PF 3/8
BHBMU-16-04G	16	12	7.5	30	30	30	37	79.5	49.5	24.5	15	PF 1/2
BHBMU-18-04G	18	12	8	32	32	30	39	81.5	51.5	26.5	15	PF 1/2
BHBMU-20-06G	20	16	8	36	32	32	39	83.5	51.5	28.5	15	PF 3/4
BHBMU-22-04G	22	12	9	36	36	31	39	82.5	51.5	30.5	15	PF 1/2
BHBMU-22-06G	22	16	9	36	36	33	39	84.5	51.5	30.5	15	PF 3/4
BHBMU-25-06G	25	16	10	41	41	33	39	87.5	52.5	35.5	15	PF 3/4
BHBMU-25-08G	25	20	10	41	41	35	39	89.5	52.5	35.5	15	PF 1
BHBMU-28-06G	28	16	10	46	46	34	41	89	55	38.5	15	PF 3/4
BHBMU-28-08G	28	22	10	46	46	36	41	91	55	38.5	15	PF 1
BHBMU-30-06G	30	16	10	46	46	34	41	89.5	55.5	40.5	15	PF 3/4
BHBMU-30-08G	30	22	10	46	46	36	41	91.5	55.5	40.5	15	PF 1
BHBMU-32-08G	32	22	11	50	50	38	43	95.5	57.5	42.5	15	PF 1
BHBMU-32-10G	32	28	11	50	50	42	43	99.5	57.5	42.5	15	PF 1 1/4

BHBFU

Hose Bulkhead Female Union

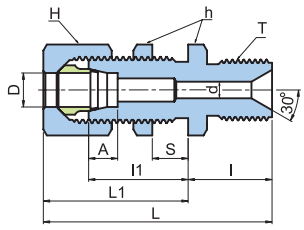

Part Number	Tube O.D. D	d	A	H	h	l	l1	L	L1	Panel Hole Drill Size	Max. Panel Thickness S	T
BHBFU-08-02G	8	6	7	17	19	21	32	63.5	42.5	14.5	13	PF 1/4
BHBFU-08-03G	8	6	7	17	19	22	32	64.5	42.5	14.5	13	PF 3/8
BHBFU-10-02G	10	6	7	19	22	22	32	65.5	43.5	16.5	13	PF 1/4
BHBFU-10-03G	10	8	7	19	22	23	32	66.5	43.5	16.5	13	PF 3/8
BHBFU-10-04G	10	8	7	19	22	26	32	69.5	43.5	16.5	13	PF 1/2
BHBFU-12-02G	12	6	7	22	24	22	32	65.5	43.5	18.5	13	PF 1/4
BHBFU-12-03G	12	9	7	22	24	23	32	66.5	43.5	18.5	13	PF 3/8
BHBFU-12-04G	12	10	7	22	24	26	32	69.5	43.5	18.5	13	PF 1/2
BHBFU-15-03G	15	9	7.5	27	27	23	37	72.5	49.5	22.5	15	PF 3/8
BHBFU-15-04G	15	12	7.5	27	27	26	37	75.5	49.5	22.5	15	PF 1/2
BHBFU-16-03G	16	9	7.5	30	30	25	37	74.5	49.5	24.5	15	PF 3/8
BHBFU-16-04G	16	12	7.5	30	30	28	37	77.5	49.5	24.5	15	PF 1/2
BHBFU-18-04G	18	12	8	32	32	28	39	79.5	51.5	26.5	15	PF 1/2
BHBFU-20-06G	20	16	8	36	32	29	39	80.5	51.5	28.5	15	PF 3/4
BHBFU-22-04G	22	12	9	36	36	29	39	80.5	51.5	30.5	15	PF 1/2
BHBFU-22-06G	22	16	9	36	36	30	39	81.5	51.5	30.5	15	PF 3/4
BHBFU-25-06G	25	16	10	41	41	30	39	82.5	52.5	35.5	15	PF 3/4
BHBFU-25-08G	25	20	10	41	41	32	39	84.5	52.5	35.5	15	PF 1
BHBFU-28-06G	28	16	10	46	46	31	41	86	55	38.5	15	PF 3/4
BHBFU-28-08G	28	22	10	46	46	33	41	88	55	38.5	15	PF 1
BHBFU-30-06G	30	16	10	46	46	31	41	86.5	55.5	40.5	15	PF3 /4
BHBFU-30-08G	30	22	10	46	46	33	41	88.5	55.5	40.5	15	PF 1
BHBFU-32-08G	32	22	11	50	50	35	43	92.5	57.5	42.5	15	PF 1
BHBFU-32-10G	32	28	11	50	50	41	43	98.5	57.5	42.5	15	PF 1 1/4
BHBFU-38-12G	38	31	12	60	55	42	45	106.5	64.5	48.5	15	PF 1 1/2
BHBFU-40-12G	40	32	12	60	60	44	50	113.5	69.5	52.5	15	PF 1 1/2
BHBFU-50-16G	50	40	12	75	70	53	50	124.5	71.5	64.5	15	PF 2

- All dimensions in millimeters unless specified as “inch”. Dimension are for reference only, subject to change
- Dimensions given approximate length with tightened nut.

BHME

Hose
Male Elbow

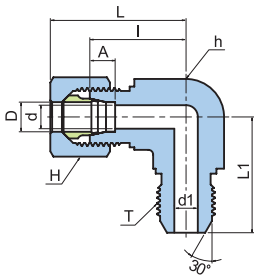

Part Number	Tube O.D. D	d	d1	A	H	h	l	L	L1	T
BHME-08-02G	8	6	6	7	17	17	23	33.5	25	PF 1/4
BHME-08-03G	8	6	9	7	17	19	24	34.5	28	PF 3/8
BHME-10-02G	10	8	6	7	19	19	24	35.5	28	PF 1/4
BHME-10-03G	10	8	9	7	19	19	24	35.5	28	PF 3/8
BHME-10-04G	10	8	12	7	19	24	29	40.5	34	PF 1/2
BHME-12-02G	12	10	6	7	22	19	24	35.5	28	PF 1/4
BHME-12-03G	12	10	9	7	22	19	24	35.5	28	PF 3/8
BHME-12-04G	12	10	12	7	22	24	29	40.5	34	PF 1/2
BHME-15-03G	15	12	9	7.5	27	24	29	41.5	33	PF 3/8
BHME-15-04G	15	12	12	7.5	27	24	29	41.5	34	PF 1/2
BHME-16-03G	16	13	9	7.5	30	27	32	44.5	36	PF 3/8
BHME-16-04G	16	13	12	7.5	30	27	32	44.5	38	PF 1/2
BHME-18-04G	18	14	12	8	32	27	32	44.5	38	PF 1/2
BHME-20-06G	20	17	16	8	36	30	33	45.5	41	PF 3/4
BHME-22-04G	22	18	12	9	36	32	34	46.5	40	PF 1/2
BHME-22-06G	22	18	16	9	36	32	34	46.5	42	PF 3/4
BHME-25-06G	25	20	16	10	41	36	36	49.5	44	PF 3/4
BHME-25-08G	25	20	20	10	41	36	36	49.5	46	PF 1
BHME-28-06G	28	22	16	10	46	41	41	55	47	PF 3/4
BHME-28-08G	28	22	22	10	46	41	41	55	49	PF 1
BHME-30-06G	30	25	16	10	46	41	41	55.5	47	PF 3/4
BHME-30-08G	30	25	22	10	46	41	41	55.5	49	PF 1
BHME-32-08G	32	26	22	11	50	46	46	60.5	54	PF 1
BHME-32-10G	32	26	28	11	50	46	46	60.5	56	PF 1 1/4

BHFE

Hose
Female Elbow

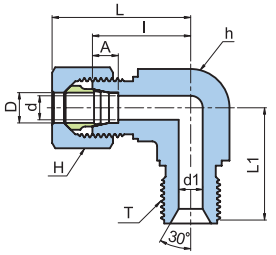

Part Number	Tube O.D. D	d	d1	A	H	h	l	L	L1	T
BHFE-08-02G	8	6	6	7	17	17	23	33.5	25	PF 1/4
BHFE-08-03G	8	6	9	7	17	19	24	34.5	27	PF 3/8
BHFE-10-02G	10	8	6	7	19	19	24	35.5	26	PF 1/4
BHFE-10-03G	10	8	9	7	19	19	24	35.5	27	PF 3/8
BHFE-10-04G	10	8	12	7	19	24	29	40.5	33	PF 1/2
BHFE-12-02G	12	10	6	7	22	19	24	35.5	26	PF 1/4
BHFE-12-03G	12	10	9	7	22	19	24	35.5	27	PF 3/8
BHFE-12-04G	12	10	12	7	22	24	29	40.5	33	PF 1/2
BHFE-15-03G	15	12	9	7.5	27	24	29	41.5	30	PF 3/8
BHFE-15-04G	15	12	12	7.5	27	24	29	41.5	33	PF 1/2
BHFE-16-03G	16	13	9	7.5	30	27	32	44.5	33	PF 3/8
BHFE-16-04G	16	13	12	7.5	30	27	32	44.5	36	PF 1/2
BHFE-18-04G	18	14	12	8	32	27	32	44.5	36	PF 1/2
BHFE-20-06G	20	17	16	8	36	30	33	45.5	38	PF 3/4
BHFE-22-04G	22	18	12	9	36	32	34	46.5	38	PF 1/2
BHFE-22-06G	22	18	16	9	36	32	34	46.5	39	PF 3/4
BHFE-25-06G	25	20	16	10	41	36	36	49.5	41	PF 3/4
BHFE-25-08G	25	20	20	10	41	36	36	49.5	43	PF 1
BHFE-28-06G	28	22	16	10	46	41	41	55	44	PF 3/4
BHFE-28-08G	28	22	22	10	46	41	41	55	46	PF 1
BHFE-30-06G	30	25	16	10	46	41	41	55.5	44	PF 3/4
BHFE-30-08G	30	25	22	10	46	41	41	55.5	46	PF 1
BHFE-32-08G	32	26	22	11	50	46	46	60.5	51	PF 1
BHFE-32-10G	32	26	28	11	50	46	46	60.5	57	PF 1 1/4
BHFE-38-12G	38	32	34	12	60	50	50	69.5	61	PF 1 1/2
BHFE-40-12G	40	32	34	12	60	55	55	74.5	62	PF 1 1/2
BHFE-50-16G	50	40	46	12	75	65	62	83.5	72	PF 2

• All dimensions in millimeters unless specified as “inch”. Dimension are for reference only, subject to change
• Dimensions given approximate length with tightened nut.

BHBME

Hose Bulkhead Male Elbow

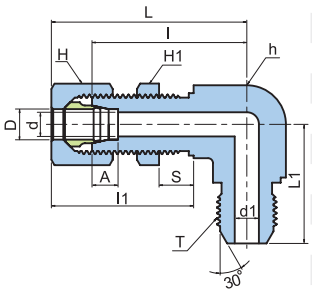

Part Number	Tube O.D. D	d	d1	A	H	H1	h	l	l1	L	L1	Panel Hole Drill Size	Max. Panel Thickness S	T
BHBME-08-02G	8	6	6	7	17	19	19	46	42.5	56.5	28	14.5	13	PF 1/4
BHBME-08-03G	8	6	9	7	17	19	19	46	42.5	56.5	30	14.5	13	PF 3/8
BHBME-10-02G	10	8	6	7	19	22	22	48	43.5	59.5	28	16.5	13	PF 1/4
BHBME-10-03G	10	8	9	7	19	22	22	48	43.5	59.5	30	16.5	13	PF 3/8
BHBME-10-04G	10	8	12	7	19	22	24	49	43.5	60.5	35	16.5	13	PF 1/2
BHBME-12-02G	12	10	6	7	22	24	24	49	43.5	60.5	31	18.5	13	PF 1/4
BHBME-12-03G	12	10	9	7	22	24	24	49	43.5	60.5	33	18.5	13	PF 3/8
BHBME-12-04G	12	10	12	7	22	24	24	49	43.5	60.5	35	18.5	13	PF 1/2
BHBME-15-03G	15	12	9	7.5	27	27	27	57	49.5	69.5	36	22.5	15	PF 3/8
BHBME-15-04G	15	12	12	7.5	27	27	27	57	49.5	69.5	37	22.5	15	PF 1/2
BHBME-16-03G	16	13	9	7.5	30	30	30	59	49.5	71.5	37	24.5	15	PF 3/8
BHBME-16-04G	16	13	12	7.5	30	30	30	59	49.5	71.5	38	24.5	15	PF 1/2
BHBME-18-04G	18	14	12	8	32	32	32	63	51.5	75.5	39	26.5	15	PF 1/2
BHBME-20-06G	20	16	16	8	36	32	32	65	51.5	77.5	40	28.5	15	PF 3/4
BHBME-22-04G	22	18	12	9	36	36	36	65	51.5	77.5	40	30.5	15	PF 1/2
BHBME-22-06G	22	18	16	9	38	36	36	65	51.5	77.5	40	30.5	15	PF 3/4
BHBME-25-06G	25	20	16	10	41	41	41	68	52.5	81.5	43	35.5	15	PF 3/4
BHBME-25-08G	25	20	20	10	41	41	41	68	52.5	81.5	43	35.5	15	PF 1
BHBME-28-06G	28	22	16	10	46	46	46	74	55	88	48	38.5	15	PF 3/4
BHBME-28-08G	28	22	22	10	46	46	46	74	55	88	48	38.5	15	PF 1
BHBME-30-06G	30	25	16	10	46	46	46	74	55.5	88.5	48	40.5	15	PF 3/4
BHBME-30-08G	30	25	22	10	46	46	46	74	55.5	88.5	48	40.5	15	PF 1

BHBFE

Hose Bulkhead Female Elbow

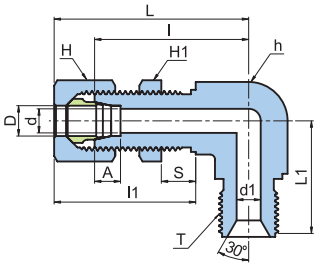

Part Number	Tube O.D. D	d	d1	A	H	H1	h	l	l1	L	L1	Panel Hole Drill Size	Max. Panel Thickness S	T
BHBFE-08-02G	8	6	6	7	17	19	19	46	42.5	56.5	26	14.5	13	PF 1/4
BHBFE-08-03G	8	6	9	7	17	19	19	46	42.5	56.5	27	14.5	13	PF 3/8
BHBFE-10-02G	10	8	6	7	19	22	22	48	43.5	59.5	28	16.5	13	PF 1/4
BHBFE-10-03G	10	8	9	7	19	22	22	48	43.5	59.5	29	16.5	13	PF 3/8
BHBFE-10-04G	10	8	12	7	19	22	24	49	43.5	60.5	33	16.5	13	PF 1/2
BHBFE-12-02G	12	10	6	7	22	24	24	49	43.5	60.5	30	18.5	13	PF 1/4
BHBFE-12-03G	12	10	9	7	22	24	24	49	43.5	60.5	30	18.5	13	PF 3/8
BHBFE-12-04G	12	10	12	7	22	24	24	49	43.5	60.5	33	18.5	13	PF 1/2
BHBFE-15-03G	15	12	9	7.5	27	27	27	57	49.5	69.5	33	22.5	15	PF 3/8
BHBFE-15-04G	15	12	12	7.5	27	27	27	57	49.5	69.5	36	22.5	15	PF 1/2
BHBFE-16-03G	16	13	9	7.5	30	30	30	59	49.5	71.5	34	24.5	15	PF 3/8
BHBFE-16-04G	16	13	12	7.5	30	30	30	59	49.5	71.5	37	24.5	15	PF 1/2
BHBFE-18-04G	18	14	12	8	32	32	32	63	51.5	75.5	37	26.5	15	PF 1/2
BHBFE-20-06G	20	16	16	8	36	32	32	65	51.5	77.5	40	28.5	15	PF 3/4
BHBFE-22-04G	22	18	12	9	36	36	36	65	51.5	77.5	40	30.5	15	PF 1/2
BHBFE-22-06G	22	18	16	9	36	36	36	65	51.5	77.5	40	30.5	15	PF 3/4
BHBFE-25-06G	25	20	16	10	41	41	41	68	52.5	81.5	43	35.5	15	PF 3/4
BHBFE-25-08G	25	20	20	10	41	41	41	68	52.5	81.5	43	35.5	15	PF 1
BHBFE-28-06G	28	22	16	10	46	46	46	74	55	88	48	38.5	15	PF 3/4
BHBFE-28-08G	28	22	22	10	46	46	46	74	55	88	48	38.5	15	PF 1
BHBFE-30-06G	30	25	16	10	46	46	46	74	55.5	88.5	48	40.5	15	PF 3/4
BHBFE-30-08G	30	25	22	10	46	46	46	74	55.5	88.5	48	40.5	15	PF 1

• All dimensions in millimeters unless specified as “inch”. Dimension are for reference only, subject to change
• Dimensions given approximate length with tightened nut.

BWC

Welding Connector

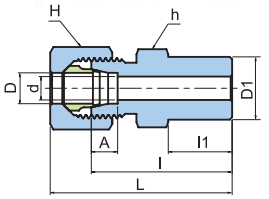

Part Number	Tube O.D. D	D1	d	A	H	h	I	I1	L
BWC-06	6	12	4	7	14	14	29	11	39.5
BWC-08	8	14	6	7	17	17	34	15	44.5
BWC-10	10	16	8	7	19	17	34	15	45.5
BWC-12	12	18	10	7	22	19	34	15	45.5
BWC-15	15	21	12	7.5	27	24	40	18	52.5
BWC-16	16	22	13	7.5	30	27	44	22	56.5
BWC-18	18	25	14	8	32	27	44	22	56.5
BWC-20	20	28	17	8	36	30	46	22	58.5
BWC-22	22	28	18	9	36	32	46	22	58.5
BWC-25	25	33	20	10	41	36	51	26	64.5
BWC-28	28	36	22	10	46	41	55	28	69
BWC-30	30	39	25	10	46	41	55	28	69.5
BWC-32	32	40	26	11	50	46	56	28	70.5
BWC-35	35	43	28	11	55	46	56	28	73.5
BWC-38	38	45	32	12	60	50	58	28	77.5
BWC-40	40	46	32	12	60	55	65	30	84.5
BWC-50	50	57	40	12	75	65	70	30	91.5
BWC-6A	1/8 10.5	16	8	7	19	17	34	15	45.5
BWC-8A	1/4 13.8	19	11	7.5	24	22	40	18	52
BWC-10A	3/8 17.3	24	14	8	32	27	44	22	56.5
BWC-15A	1/2 21.7	28	18	9	36	32	46	22	58.5
BWC-20A	3/4 27.2	33	22	10	46	41	52	25	66
BWC-25A	1 34.0	40	28	11	55	46	56	28	73.5
BWC-32A	1 1/4 42.7	47	34	12	65	60	65	28	85.5
BWC-40A	1 1/2 48.6	55	40	12	75	65	70	30	91.5

BWBU

Welding Bulkhead Union

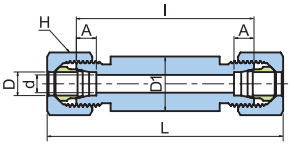

Part Number	Tube O.D. D	d	A	H	D1	I	L
BWBU-06	6	4	7	14	16	74	95
BWBU-08	8	6	7	17	16	74	95
BWBU-10	10	8	7	19	19	74	97
BWBU-12	12	10	7	22	20	74	97
BWBU-15	15	12	7.5	27	25	78	103
BWBU-16	16	13	7.5	30	28	78	103
BWBU-18	18	14	8	32	28	78	103
BWBU-20	20	17	8	36	32	78	103
BWBU-22	22	18	9	36	32	78	103
BWBU-25	25	20	10	41	38	78	105
BWBU-28	28	22	10	46	39	82	110
BWBU-30	30	25	10	46	46	82	111
BWBU-32	32	26	11	50	46	82	111
BWBU-35	35	28	11	55	46	82	117
BWBU-38	38	32	12	60	55	82	121
BWBU-40	40	32	12	60	55	90	129
BWBU-50	50	40	12	75	65	90	133
BWBU-6A	1/8 10.5	8	7	19	19	74	97
BWBU-8A	1/4 13.8	11	7.5	24	22	78	102
BWBU-10A	3/8 17.3	14	8	32	28	78	103
BWBU-15A	1/2 21.7	18	9	36	32	78	103
BWBU-20A	3/4 27.2	22	10	46	39	82	110
BWBU-25A	1 34.0	28	11	55	46	82	117
BWBU-32A	1 1/4 42.7	34	12	65	58	90	131
BWBU-40A	1 1/2 48.6	40	12	75	65	90	133

• All dimensions in millimeters unless specified as “inch”. Dimension are for reference only, subject to change
• Dimensions given approximate length with tightened nut.

BAP-R
Adapter

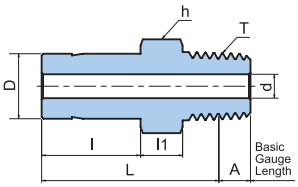

Part Number	Tube O.D. D	d	A	h	l	l1	L	T
BAP-06-01R	6	3	3.97	12	20	6	32	PT 1/8
BAP-08-02R	8	5	6.01	14	20	7	35	PT 1/4
BAP-10-02R	10	6	6.01	14	21	7	36	PT 1/4
BAP-10-03R	10	6	6.35	19	21	7	36.5	PT 3/8
BAP-12-02R	12	7	6.01	14	22	7	37	PT 1/4
BAP-12-03R	12	8	6.35	19	22	7	37.5	PT 3/8
BAP-15-03R	15	8	6.35	19	24	8	40.5	PT 3/8
BAP-15-04R	15	10	8.16	22	24	8	43	PT 1/2
BAP-16-04R	16	11	8.16	22	24	8	43	PT 1/2
BAP-18-04R	18	12	8.16	22	24	8	43	PT 1/2
BAP-20-06R	20	14	9.53	27	25	10	46.5	PT 3/4
BAP-22-06R	22	14	9.53	27	26	10	47.5	PT 3/4
BAP-25-06R	25	16	9.53	27	28	10	49.5	PT 3/4
BAP-25-08R	25	17	10.39	36	28	11	52.5	PT 1
BAP-28-08R	28	18	10.39	36	28	11	52.5	PT 1
BAP-30-08R	30	20	10.39	36	29	11	53.5	PT 1
BAP-30-10R	30	20	12.70	46	29	12	55	PT 1 1/4
BAP-32-10R	32	22	12.70	46	30	12	56	PT 1 1/4
BAP-38-12R	38	26	12.70	50	36	14	64.5	PT 1 1/2
BAP-40-12R	40	28	12.70	50	36	14	64	PT 1 1/2
BAP-50-16R	50	34	15.88	65	37	20	72	PT 2
BAP-6A-02R	1/8 10.5	6	6.01	14	21	7	36	PT 1/4
BAP-8A-03R	1/4 13.8	9	6.35	19	22	8	38.5	PT 3/8
BAP-10A-04R	3/8 17.3	11	8.16	22	24	8	43	PT 1/2
BAP-15A-06R	1/2 21.7	14	9.53	27	26	10	47.5	PT 3/4
BAP-20A-08R	3/4 27.2	18	10.39	36	28	11	52.5	PT 1
BAP-25A-10R	1 34.0	23	12.70	46	33	12	59	PT 1 1/4
BAP-32A-12R	1 1/4 42.7	29	12.70	50	36	17	67	PT 1 1/2
BAP-40A-16R	1 1/2 48.6	33	15.88	65	37	20	72	PT 2

BAP-G
Adapter

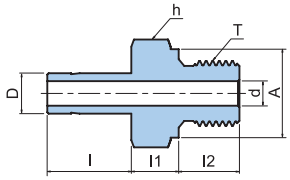

Part Number	Tube O.D. D	d	A	h	l	l1	l2	T
BAP-06-01G	6	3	14	14	20	8	8	PF 1/8
BAP-08-02G	8	5	18	19	20	9	12	PF 1/4
BAP-10-02G	10	6	18	19	21	9	12	PF 1/4
BAP-10-03G	10	6	21.5	22	21	10	12	PF 3/8
BAP-12-02G	12	7	18	19	22	9	12	PF 1/4
BAP-12-03G	12	8	21.5	22	22	10	12	PF 3/8
BAP-15-03G	15	8	21.5	22	24	10	12	PF 3/8
BAP-15-04G	15	10	25.5	27	24	13	14	PF 1/2
BAP-16-04G	16	11	25.5	27	24	13	14	PF 1/2
BAP-18-04G	18	12	25.5	27	24	13	14	PF 1/2
BAP-20-06G	20	14	31.5	32	25	16	16	PF 3/4
BAP-22-06G	22	14	31.5	32	26	16	16	PF 3/4
BAP-25-06G	25	16	31.5	32	28	16	16	PF 3/4
BAP-25-08G	25	17	38	41	28	18	18	PF 1
BAP-28-08G	28	18	38	41	28	18	18	PF 1
BAP-30-08G	30	20	38	41	29	21	18	PF 1
BAP-30-10G	30	20	48.5	50	29	21	20	PF 1 1/4
BAP-32-10G	32	22	48.5	50	30	21	20	PF 1 1/4
BAP-38-12G	38	26	53.5	55	36	21	21	PF 1 1/2
BAP-40-12G	40	28	53.5	55	36	21	21	PF 1 1/2
BAP-50-16G	50	34	66	70	37	28	24	PF 2
BAP-6A-02G	1/8 10.5	6	18	19	21	9	12	PF 1/4
BAP-8A-03G	1/4 13.8	9	21.5	22	22	10	12	PF 3/8
BAP-10A-04G	3/8 17.3	11	25.5	27	24	13	14	PF 1/2
BAP-15A-06G	1/2 21.7	14	31.5	32	26	16	16	PF 3/4
BAP-20A-08G	3/4 27.2	18	38	41	28	18	18	PF 1
BAP-25A-10G	1 34.0	23	48.5	50	33	21	20	PF 1 1/4
BAP-32A-12G	1 1/4 42.7	29	53.5	55	36	23	21	PF 1 1/2
BAP-40A-16G	1 1/2 48.6	33	66	70	37	28	24	PF 2

• All dimensions in millimeters unless specified as “inch”. Dimension are for reference only, subject to change
• Dimensions given approximate length with tightened nut.

BRD

Reducer

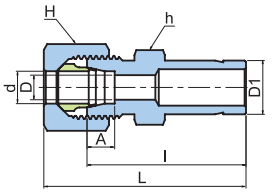

Part Number	Tube O.D. D	Tube O.D. D1	d	A	H	h	l	L
BRD-06-08	6	8	4	7	14	14	39	49.5
BRD-06-10	6	10	4	7	14	14	40	50.5
BRD-08-10	8	10	6	7	17	17	40	50.5
BRD-06-12	6	12	4	7	14	14	41	51.5
BRD-08-12	8	12	6	7	17	17	41	51.5
BRD-10-12	10	12	8	7	19	17	41	52.5
BRD-08-15	8	15	6	7	17	17	43	53.5
BRD-10-15	10	15	8	7	19	17	43	54.5
BRD-06-16	6	16	4	7	14	17	43	53.5
BRD-10-16	10	16	8	7	19	17	43	54.5
BRD-12-16	12	16	10	7	22	19	43	54.5
BRD-10-18	10	18	8	7	19	19	44	55.5
BRD-15-18	15	18	12	7.5	27	24	45	57.5
BRD-06-20	6	20	4	7	14	22	45	55.5
BRD-12-20	12	20	10	7	22	22	45	56.5
BRD-16-20	16	20	13	7.5	30	27	47	59.5
BRD-15-22	15	22	12	7.5	27	24	48	60.5
BRD-18-22	18	22	14	8	32	27	48	60.5
BRD-16-25	16	25	13	7.5	30	27	50	62.5
BRD-20-25	20	25	17	8	36	30	52	64.5
BRD-18-28	18	28	14	8	32	30	52	64.5
BRD-22-28	22	28	18	9	36	32	52	64.5
BRD-20-30	20	30	17	8	36	32	53	65.5
BRD-25-30	25	30	20	10	41	36	54	67.5
BRD-25-32	25	32	20	10	41	36	55	68.5
BRD-22-35	22	35	18	9	36	36	58	70.5
BRD-28-35	28	35	22	10	46	41	60	74
BRD-25-28	25	38	20	10	41	41	61	74.5
BRD-30-38	30	38	25	10	46	41	63	77.5
BRD-6A-8A	1/8 10.5	1/4 13.8	8	7	19	17	41	52.5
BRD-6A-10A	1/8 10.5	3/8 17.3	8	7	19	19	44	55.5
BRD-8A-10A	1/4 13.8	3/8 17.3	11	7.5	24	22	46	58
BRD-8A-15A	1/4 13.8	1/2 21.7	11	7.5	24	24	48	60
BRD-10A-15A	3/8 17.3	1/2 21.7	14	8	32	27	48	60.5
BRD-10A-20A	3/8 17.3	3/4 27.2	14	8	32	30	52	64.5
BRD-15A-20A	1/2 21.7	3/4 27.2	18	9	36	32	52	64.5
BRD-20A25A	1/2 21.7	1 34.0	18	9	36	36	58	70.5
BRD-25A-32A	3/4 27.2	1 34.0	22	10	46	41	60	74

BAE

Adjustable Elbow

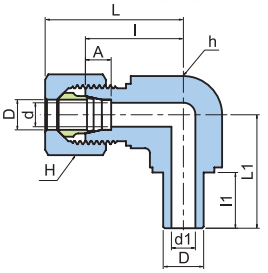

Part Number	Tube O.D. D	d	d1	A	H	h	l	l1	L	L1
BAE-10	10	8	6	7	19	17	23	21	34.5	35
BAE-12	12	10	8	7	22	19	24	22	35.5	37
BAE-15	15	12	10	7.5	27	24	29	24	44.5	40
BAE-16	16	13	11	7.5	30	27	32	24	44.5	43
BAE-18	18	14	12	8	32	27	32	24	44.5	43
BAE-20	20	17	14	8	36	30	33	25	45.5	45
BAE-22	22	18	14	9	36	32	34	26	46.5	46
BAE-25	25	20	17	10	41	36	36	28	49.5	49
BAE-28	28	22	18	10	46	41	41	28	55	53
BAE-30	30	25	20	10	46	41	41	29	55.5	54
BAE-32	32	26	22	11	50	46	50	30	64.5	66
BAE-38	38	32	26	12	60	50	50	36	69.5	72

• All dimensions in millimeters unless specified as “inch”. Dimension are for reference only, subject to change
• Dimensions given approximate length with tightened nut.

BABT

Adjustable Branch Tee

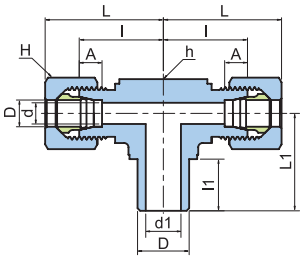

Part Number	Tube O.D. D	d	d1	A	H	h	l	l1	L	L1
BABT-10	10	8	6	7	19	17	23	21	34.5	35
BABT-12	12	10	8	7	22	19	24	22	35.5	37
BABT-15	15	12	10	7.5	27	24	32	24	44.5	43
BABT-16	16	13	11	7.5	30	27	32	24	44.5	43
BABT-18	18	14	12	8	32	27	32	24	44.5	43
BABT-20	20	17	14	8	36	30	33	25	45.5	45
BABT-22	22	18	14	9	36	32	34	26	46.5	46
BABT-25	25	20	17	10	41	36	36	28	49.5	49

BART

Adjustable Run Tee

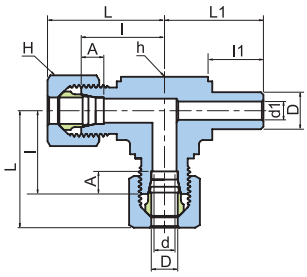

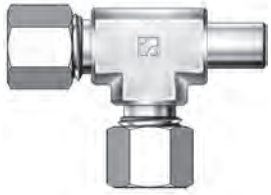

Part Number	Tube O.D. D	d	d1	A	H	h	l	l1	L	L1
BART-10	10	8	6	7	19	17	23	21	34.5	35
BART-12	12	10	8	7	22	19	24	22	35.5	37
BART-15	15	12	10	7.5	27	24	32	24	44.5	43
BART-16	16	13	11	7.5	30	27	32	24	44.5	43
BART-18	18	14	12	8	32	27	32	24	44.5	43
BART-20	20	17	14	8	36	30	33	25	45.5	45
BART-22	22	18	14	9	36	32	34	26	46.5	46
BART-25	25	20	17	10	41	36	36	28	49.5	49

• All dimensions in millimeters unless specified as “inch”. Dimension are for reference only, subject to change
• Dimensions given approximate length with tightened nut.

BAPV

Air Purge Valve (Tube End)

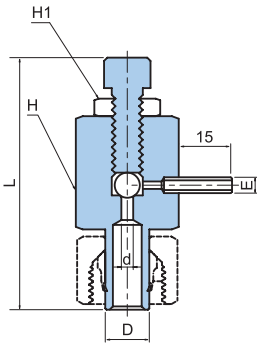

Part Number	Dimension						
	D	E	d	H	H1	L	Ball
BAPV-06	6	4	3	14	13	56	7/32
BAPV-08	8	4	3	14	13	56	7/32
BAPV-10	10	4	3	14	13	57	7/32
BAPV-12	12	4	3	14	13	58	7/32
BAPV-15	15	6	4	27	19	74	5/16
BAPV-16	16	6	4	27	19	74	5/16
BAPV-18	18	6	4	27	19	74	5/16
BAPV-20	20	6	4	27	19	75	5/16
BAPV-22	22	6	4	27	19	76	5/16
BAPV-25	25	6	4	27	19	78	5/16
BAPV-28	28	6	4	30	19	78	5/16
BAPV-6A	10.5	4	3	14	13	57	7/32
BAPV-8A	13.8	6	4	27	19	72	5/16
BAPV-10A	17.3	6	4	27	19	74	5/16
BAPV-15A	21.7	6	4	27	19	76	5/16
BAPV-20A	27.2	6	4	30	19	79	5/16

BAPV-R

Air Purge Valve (Thread End)

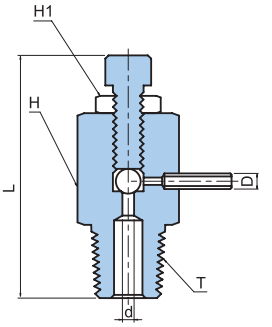

Part Number	Dimension						
	D	d	H	H1	L	Ball	T
BAPV-01R	4	3	14	13	51	7/32	PT 1/8
BAPV-02R	4	3	14	13	53	7/32	PT 1/4
BAPV-03R	6	4	19	13	54	7/32	PT 3/8
BAPV-04R	6	4	27	19	69	5/16	PT 1/2

• All dimensions in millimeters unless specified as “inch”. Dimension are for reference only, subject to change
• Dimensions given approximate length with tightened nut.

Material Comparison List

Part Number	Chemical Compositions(%)					Mechanical Properties			
	C	Si	Mn	P	S	Tensile strength (kg/mm²)	Yield point (kg/mm²)	Elongation (%)	Hardness
JIS G4051 S45C	0.42~0.48	0.15~0.35	0.60~0.90	0.030MAX.	0.035MAX.	58(MIN.)	35(MIN.)	20(MIN.)	167~229 Normalizing
AISI 1045 & SAE 1045	0.43~0.50	0.10~0.20	0.60~0.90	0.040MAX.	0.050MAX.	56	49	15	163
DIN 1652 C45	0.42~0.50	0.15~0.35	0.50~0.80	0.045MAX.	0.045MAX.	60(MIN.)	34(MIN.)	18(MIN.)	206(MIN.) Normalizing

Applicable Tube List

Selection from those listed below is recommended.

Tube	Thickness Tolerance	0.5 ±0.1	1.0 ±0.15	1.5 ±0.2	2.0 ±0.2	2.5 ±0.25	3.0 ±0.3	3.0 ±0.33	3.5 ±0.35	4.0 ±0.4	4.5 ±0.45	5.0 ±0.5	5.5 ±0.55	6.0 ±0.6	7.0 ±0.7	8.0	9.0
Outside Diameter	Tolerance																
4	±0.1	○	○														
6			○	○													
8			○	○													
10			○	○	○												
12			○	○		○											
15				○		○											
16				○	○		○										
18						○		○									
20					○	○			○								
22					○			○		○							
25							○				○						
28	±0.15					○			○			○					
30						○				○			○				
35								○			○			○			
38						○				○	○				○		
42	±0.2					○				○			○			○	
50								○			○			○			○

Note : 1. The area enclosed by thick line indicates the specified range of tube thickness against the outer diameters. (JOHS-102-1964)
2. Without for some particular reasons, it is recommended to use thickness indicated by O mark.

Carbon Steel Tubing Japanese Standards

Relevant standards		JOHS hydraulic line service		JIS B2351 bite type fitting		JIS G3455 carbon steel pipes for high pressure service	
Quality characteristic		OST.1	OST.2	STPS.1	STPS.2	STS.40	STS.370
Chemical composition(%)	C	< 0.20	0.08~0.18	< 0.20	0.08~0.18	0 < 0.30	< 0.25
	Si	< 0.035	0.10~0.35	< 0.35	0.10~0.35	0.10~0.35	0.10~0.35
	Mn	0.25~0.60	0.30~0.60	0.25~0.60	0.30~0.60	0.30~1.40	0.30~1.10
	P	< 0.040	< 0.035	< 0.040	< 0.035	< 0.035	< 0.035
	S	< 0.040	< 0.035	< 0.040	< 0.035	< 0.035	< 0.035
	Cu		< 0.20		< 0.20		
Mechanical property	Tensile strength (kg/mm²)	< 45	< 45	< 45	< 45	> 42	> 38
	Yield point(kg/mm²)	> 18	> 20	> 18	> 18	> 25	> 22
	Elongation(%)	> 35	> 35	> 30	> 30	> 25	> 30
Dimensional tolerance	Outside diameter (mm)	±0.10 < 22 28~35±0.15 42~50 ±0.20	±0.10<22 28~35+0.15 42~50+0.2	±0.10 < 25 30~38±0.15	±0.10 < 25 30~38±0.15	Under 40mm : ±0.3mm 40mm or Over : ±0.8%	Under 40mm : ±0.3mm 40mm or Over : ±0.8%
	Wall thickness (mm)	0.5 ± 20% 1.0~1.5±15% 10% > 2.0	0.5 ± 20% 1.0~1.5±15% 10% > 2.0	1.0 ± 0.15 1.5 ± 0.20 10% > 2.0	1.0 ± 0.15 1.5 ± 0.20 10% > 2.0	Under 2mm : ±0.2mm 2mm or Over : ±10%	Under 2mm : ±0.2mm 2mm or Over : ±10%
	Length (mm)	< 6000 $^{+10}_{-0}$ > 6000 $^{+15}_{-0}$	< 6000 $^{+10}_{-0}$ > 6000 $^{+15}_{-0}$	< 6000 $^{+10}_{-0}$ > 6000 $^{+15}_{-0}$	< 6000 $^{+10}_{-0}$ > 6000 $^{+15}_{-0}$	greater than specified length	greater than specified length
Inspection and test	Eddy current flaw detection	○	○	○	○	○	○
	Water pressure test(kg/cm²)	50	50	50	50	P = 200S t/D	P = 200S t/D

Male Stud Form and Sealing

Male stud form A sealing by o-ring and bonded seal

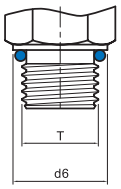

Male stud form B sealing by copper gasket.

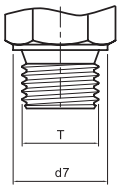

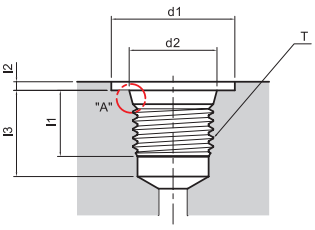

Port tapping for o-ring sealing

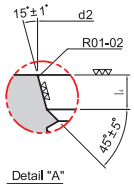

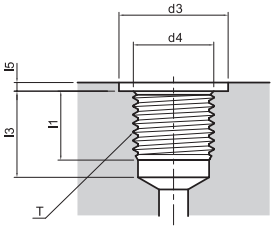

Port tapping for bonded sealing

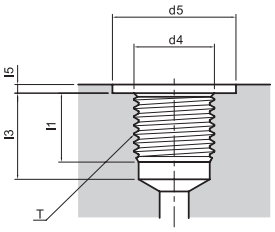

Port tapping for copper gasket sealing

T	d1	$d2^{+0.1}_{0}$	$d3^{+0.3}_{0}$	Max d4	$d5^{+0.3}_{0}$	d6	d7	Min l1	Max l2	Min l3	$l4^{+0.4}_{0}$	l5	Suitable Seal		
													O-Ring	Bonded Seal	Copper Gasket
PF 1/8	18	11.6	17.4	9.7	18.2	14	14	10	1.0	15	2.0	1	P 8	BBS-01	BCG-01
PF 1/4	24	15.6	20.9	13.1	22.2	19	18	14	1.5	20	2.5	1	P 11	BBS-02	BCG-02
PF 3/8	28	18.6	24.4	16.6	26.2	22	21.5	14	2.0	20	2.5	1	P 14	BBS-03	BCG-03
PF 1/2	34	22.6	29.4	20.9	32.2	27	25.5	17	2.5	25	2.5	1	P 18	BBS-04	BCG-04
PF 3/4	45	29.8	34.9	26.4	38.2	36	31.5	19	2.5	27	3.5	1	P 24	BBS-06	BCG-06
PF 1	51	35.8	41.9	33.2	42.3	41	38	22	2.5	31	3.5	1	P 29	BBS-08	BCG-08
PF 1 1/4	62	44.8	50.9	41.9	53.3	50	48.5	24	2.5	33	3.5	1	P 38	BBS-10	BCG-10
PF 1 1/2	68	50.8	57.4	47.8	60.3	55	53.5	25	2.5	34	3.5	1	P 44	BBS-12	BCG-12
PF 2	76	67.2	69.4	59.6	72.3	75	66	29	2.5	38	3.5	1	P 56	BBS-16	BCG-16

Copper Gasket

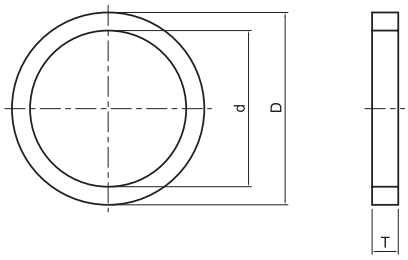

Part Number	Male Thread	d	D	T
BCG-01	PF 1/8	10	18	2
BCG-02	PF 1/4	14	22	2
BCG-03	PF 3/8	17	26	2
BCG-04	PF 1/2	22	32	2
BCG-06	PF 3/4	27	38	2
BCG-08	PF 1	34	42	2
BCG-10	PF 1 1/4	43	53	2
BCG-12	PF 1 1/2	49	60	2
BCG-16	PF 2	61	72	2

Bonded Seal

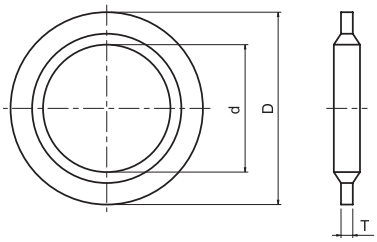

Part Number	Male Thread	d	D	T
BBS-01	PF 1/8	9.9	17	2
BBS-02	PF 1/4	13.3	20.5	2
BBS-03	PF 3/8	16.8	24	2
BBS-04	PF 1/2	21.1	29	2
BBS-06	PF 3/4	26.6	34.5	2
BBS-08	PF 1	33.4	41.5	2.3
BBS-10	PF 1 1/4	42.1	50.5	2.3
BBS-12	PF 1 1/2	48.0	57	2.3
BBS-16	PF 2	59.8	69	2.3

• All dimensions in millimeters unless specified as “inch”. Dimension are for reference only, subject to change
• Dimensions given approximate length with tightened nut.

Bite Type Tube Fittings (JIS B2351)

www.sks-online.com

SUPERLOK®

37º Flared Tube Fittings (SAE J514)

www.superlok.com

INDEX

Meets SAE Standard J514

Before tightening the nut

After tightening the nut

Figure.1

If required, see SAE Standard J514 for a complete list of dimensions. NPT Tapered Pipe Threads meet the requirements of ASME/ANSIB.I.20.1.

All 37° Flared tube fittings 3 piece tube assembly, can be used with metric tube by using a metric 37° sleeve, instead of an inch sleeve. Each dimension table shows which metric sleeve should be used for every size.

Assembly Instructions

1. Cut the tube to the proper length.
2. Slide the nut and sleeve onto the tube. (See Fig.1).
3. With a special flaring tool, form the flare to 37° dimension according to SAE J533. (see page 3).
4. Screw the nut onto the body until finger tight.
5. From this position, tighten the nut with a wrench 1/4" turn in order to make a leakproof metal-to-metal connection.

Tubing Data For 37° Flare Three-Piece Tube Assembly

In order to ensure maximum fitting reliability and performance, please take great care when selecting the tube for each application. Tubing should be a fully annealed, seamless and drawn, suitable for bending and flaring, according to standard ASTM-269, AISI 316 or 304.

Tube Handling

Scratches on the tube might cause leaks. It is, therefore, important to handle the tube carefully to reduce the risk of leaks.

1. Tubes must not be dragged on the floor.
2. Tubes must not be dragged out of a tubing rack, especially in cases of large OD tubes.

Tube Cutter

To attain a leakfree connection, the tubing must be cut squarely. A good quality tube cutter with the appropriate blade for the tubing material is recommended. Do not try to reduce the time of cutting by taking deep cuts with each turn of the cutter.The end of the tube must be deburred to avoid damage to the fitting and to ensure that the tube reaches the bottom of the fitting.

Quality

Lengths of finished tubing should be reasonably straight and have smooth ends, free from burrs. Tubing should be free from scale and injurious defects, and it should have a workmanlike finish. Surface imperfections such as handling marks, die marks, or shallow pits will not be considered injurious defects provided the imperfections are within the tolerances specified for diameter and wall thickness. The removal of such imperfections is not required. (Quality SAE J524).

Tube Cutting

Two different methods can be used to cut tubes:

1. Tube cutter 2. Hacksaw

HACKSAW Cutting

In order to cut the tube with a hacksaw and to attain square ends, the tube must be cut with guide blocks. This method of cutting requires deburring of the tube ends.

Warning

Do not hold the tube in a vise in the place where it will be inserted into the fitting. The vise will leave a mark on the tube that may cause leaks and might cause ovality.

Ordering Information

Example	JMC	-	8T	-	04N	-	36L
	1 2		3-1		3-2		4

1. 37° Flared Tube Fitting

2. Type of Fitting - Refer to catalogue Index

3. Size of Fitting

3-1. Tube O.D

Fractional Tube	O.D (Inch)	1/8	3/16	1/4	5/16	3/8	1/2	5/8	3/4	7/8	1	1-1/4	1-1/2	2
	Designation	2T	3T	44	5T	6T	8T	10T	12T	14T	16T	20T	24T	32T
Metric Tube	O.D (mm)	2	3	6	8	10	12	16	18	22	25	32	38	50
	Designation	2MT	3MT	6MT	8MT	10MT	12MT	16MT	18MT	22MT	25MT	32MT	38MT	50MT

3-2. Pipe Thread Size or tube size

Size (inch)	1/8	1/4	3/8	1/2	3/4	1	1-1/4	1-1/2
ISO Tapered	01R	02R	03R	04R	06R	08R	10R	12R
NPT	01N	02N	03N	04N	06N	08N	10N	12N
ISO Parallel	01G	02G	03G	04G	06G	08G	10G	12G
Unified Screw	02U	04U	06U	08U	12U	16U	20U	24U

4. Material

Material	316 Stainless Steel	316L Stainless Steel	Brass	Carbon Steel A105	Carbon Steel S45C
Identify	316	36L	B	15	S45C

Assembly Instructions

Perform flaring according to SAE J533. See Fig. 2.
See Table 1 below for dimensions .

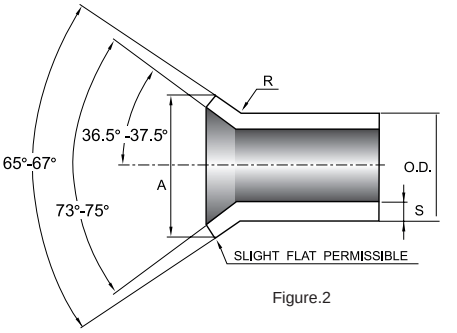

Figure.2

TABLE 1: Laring

Nominal Tube O.D.	A single flare diameter				R		S	
	in		mm		in	mm	in	mm
	Max	Min	Max	Min	±0.02	±0.5		
1/8	0.20	0.18	5.08	4.58	0.03	0.8	0.035	0.88
3/16	0.28	0.26	7.11	6.61	0.03	0.8	0.035	0.88
1/4	0.36	0.34	9.14	8.64	0.03	0.8	0.065	1.65
5/16	0.43	0.40	10.92	10.16	0.03	0.8	0.065	1.65
3/8	0.49	0.46	12.44	11.69	0.04	1.0	0.065	1.65
1/2	0.66	0.63	16.76	16.01	0.06	1.5	0.083	2.10
5/8	0.79	0.76	20.06	19.31	0.06	1.5	0.095	2.41
3/4	0.95	0.92	24.13	23.37	0.08	2.0	0.109	2.76
7/8	1.07	1.04	27.17	26.42	0.08	2.0	0.109	2.76
1	1.20	1.17	30.48	29.72	0.09	2.3	0.120	3.04
1 1/8	1.38	1.35	35.05	34.92	0.09	2.3	0.120	3.04
1 1/4	1.51	1.48	38.35	37.60	0.09	2.3	0.120	3.04
1 1/2	1.73	1.70	43.94	43.18	0.11	2.8	0.120	3.04
DEBURRING PRIOR TO FLARING	To ensure satisfactory flares are produced, it may be necessary to deburr the tube end prior to flaring. It is usually necessary to break the inside corner smoothly before single flaring, and some non-ferrous tubing to eliminate is normally required to eliminate the cutoff burr which might otherwise create leakage paths across a substantial portion of the flare. It is acceptable to smoothly break the outside corner prior to single flaring, or both outside and inside corners prior to double flaring, on any tube material to minimize splitting.							

Dimensions are for reference only, and are subject to change without notice.

TABLE 2 : Allowable Working Pressure Ratings (Capable of 4″ to 1″ Min. Burst)

Nom.SAE Dash Size	Nom.Tube O.D Inches	37° Flare Straight Thread	Nom.Pipe Size	SAE St. Threads Union and Bulkhead (psi)	Fittings with Pipe Threads (psi)
2	1/8	5/16″ - 24	1/8″	5000	5000
3	3/16	3/8″ - 24	1/8″	5000	5000
4	1/4	7/16″ - 20	1/8″	5000	5000
5	5/16	1/2″ - 20	1/8″	5000	5000
6	3/8	9/16″ - 18	1/4″	5000	5000
8	1/2	3/4″ - 16	3/8″	4500	4000
10	5/8	7/8″ - 14	1/2″	3500	3000
12	3/4	1 1/16″ - 12	3/4″	3500	3000
14	7/8	1 3/16″ - 12	3/4″	3000	2500
16	1	1 5/16″ - 12	1″	3000	2000
20	1 1/4	1 5/8″ - 12	1 1/4″	2500	1150
24	1 1/2	1 7/8″ - 12	1 1/2″	2000	1000
32	2	2 1/2″ - 12	2″	1500	1000
NOTE	Since many factors influence the pressure at which a system will or will not perform satisfactorily, values shown in Table 2 should not be construed as guaranteed minimum.				

Design and Construction

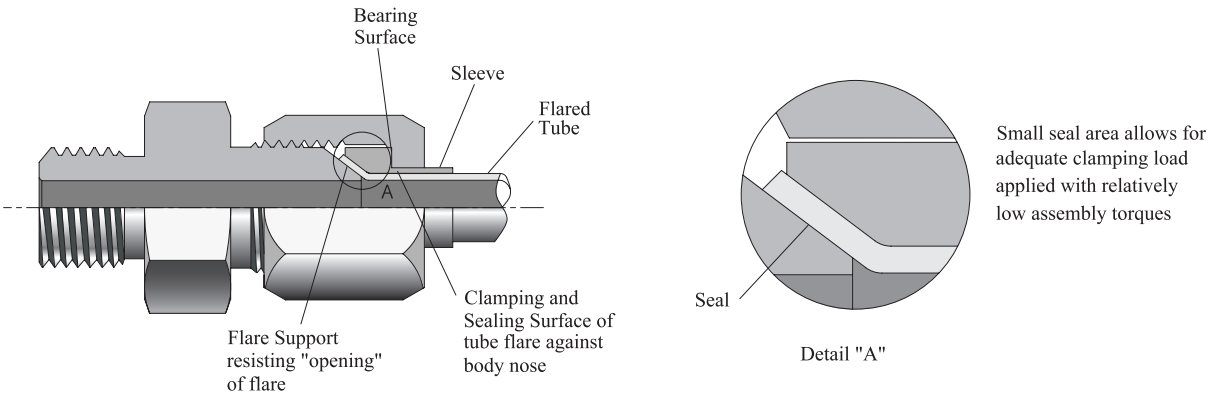

Figure 3.

The SAE 37° Flared Tube Fittings design is simple. It uses an easily produced flare at the tube end to seal and hold fluid under high pressure. The fitting consists of three pieces: the body,sleeve and nut. The tube end is flared at a 37° angle (74°included angle) and held between the fitting nose (seat) and the sleeve (support) with the nut as shown in Fig. 3, providing a very effective (single) seal between the fitting nose and the tube flare.

The design of SAE 37° Flared Tube Fittings is very efficient. The fitting incorporates the smallest seal area of all fitting types.This seal area, as seen in Fig. 3, is only slightly larger than the fluid flow area. The small seal area results in a compact design, lowassembly torque, and a relatively high-pressure capability.

The primary difference between a two-piece flare fitting and thethree-piece design is the flare support sleeve. The supportsleeve provides several key functions:

1. It provides a clamping surface for the tube flare.
2. It provides a bearing surface for the tube nut. The sleeve isolates the tube from the nut, minimizing the tube twist during a ssembly, a common problem of 2-piece flare fitting designs.
3. It provides support to the tube flare. The tapered fitting nose tends to wedge open the tube flare during assembly. The sleeve helps to resist this expansion, thus eliminating the possibility of tube flare and sleeve jammingi nside the nut. This eliminates any waste of applied torqueand allows for easy disassembly.
4. It makes the fitting adaptable to metric tube merely by changing its inside diameter.

Due to the popularity and simplicity of the 37° flare fitting, many manufacturers offer the product. Even though most manufacturers conform to the same dimensional standards, there are significant performance advantages with SUPERLOK SAE 37° Flared Tube Fittings due to SUPERLOK's optimized manufacturing methods and commitment to quality.

Thread Designator

Pipe Thread

Thread Type	Thread Size								
	1/8	1/4	3/8	1/2	3/4	1	1 1/4	1 1/2	2
NPT	01N	02N	03N	04N	06N	08N	10N	12N	16N
ISO/BSP Parallel	01G	02G	03G	04G	06G	08G	10G	12G	16G
ISO/BSP Tapered	01R	02R	03R	04R	06R	08R	10R	12R	16R

Unified Thread

Thread Type	Thread Size												
	5/16-24	3/8-24	7/16-20	1/2-20	9/16-18	3/4-16	7/8-14	1 1/16-12	1 3/16-12	1 5/16-12	1 5/8-12	1 7/8-12	2 1/2-12
UNF/UN	02U	03U	04U	05U	06U	08U	10U	12U	14U	16U	20U	24U	32U

JU
Union

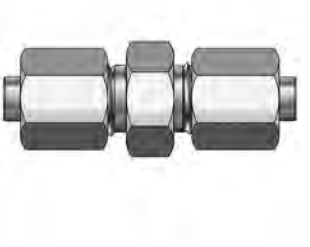

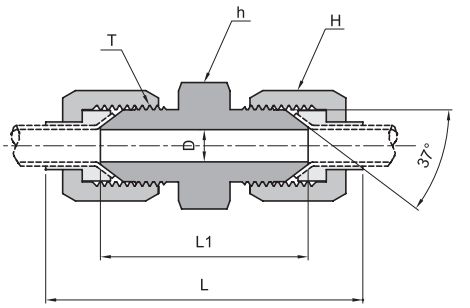

Part Number	Tube O.D.		T (UNF/UN)	D	h (HEX)	H (HEX)	L	L1
	Inch	Metric						
JU-2T	1/8	3	5/16 - 24	1.6	11.1	9.5	45.3	29.7
JU-3T	3/16	4	3/8 - 24	3.2	11.1	11.1	50.0	31.2
JU-4T	1/4	6	7/16 - 20	4.4	12.7	14.3	53.0	34.8
JU-5T	5/16	8	1/2 - 20	6.0	14.3	15.9	55.6	34.8
JU-6T	3/8	10	9/16 - 18	7.5	15.9	17.5	59.6	35.8
JU-8T	1/2	12	3/4 - 16	9.9	20.6	22.2	66.5	41.1
JU-10T	5/8	16	7/8 - 14	12.3	23.8	25.4	81.0	47.8
JU-12T	3/4	18	1 1/16 - 12	15.5	28.6	31.8	85.9	54.9
JU-14T	7/8	22	1 3/16 - 12	18.3	31.8	34.9	91.3	56.1
JU-16T	1	25	1 5/16 - 12	21.4	34.9	38.1	95.2	57.2
JU-20T	1 1/4	32	1 5/8 - 12	27.4	42.9	50.8	109.0	61.7
JU-24T	1 1/2	38	1 7/8 - 12	33.3	50.8	57.2	123.2	69.8
JU-32T	2	50	2 1/2 - 12	45.2	66.7	73.0	141.4	86.4

JUE
Union Elbow

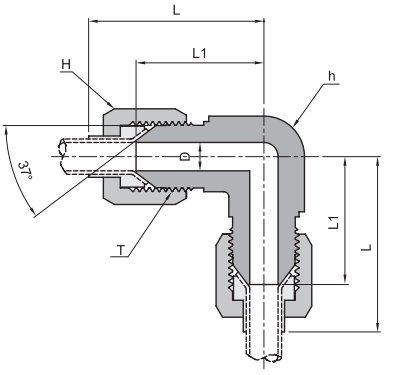

Part Number	Tube O.D.		T (UNF/UN)	D	h (HEX)	H (HEX)	L	L1
	Inch	Metric						
JUE-2T	1/8	3	5/16 - 24	1.6	11.1	9.5	27.4	19.6
JUE-3T	3/16	4	3/8 - 24	3.2	11.1	11.1	30.5	21.1
JUE-4T	1/4	6	7/16 - 20	4.4	11.1	14.3	31.7	22.6
JUE-5T	5/16	8	1/2 - 20	6.0	14.3	15.9	34.5	24.1
JUE-6T	3/8	10	9/16 - 18	7.5	14.3	17.5	38.8	26.9
JUE-8T	1/2	12	3/4 - 16	9.9	19.0	22.2	44.5	31.8
JUE-10T	5/8	16	7/8 - 14	12.3	22.2	25.4	53.4	36.8
JUE-12T	3/4	18	1 1/16 - 12	15.5	27.0	31.8	57.7	42.2
JUE-14T	7/8	22	1 3/16 - 12	18.3	33.3	34.9	63.3	45.7
JUE-16T	1	25	1 5/16 - 12	21.4	33.3	38.1	65.0	46.0
JUE-20T	1 1/4	32	1 5/8 - 12	27.4	41.3	50.8	70.8	52.3
JUE-24T	1 1/2	38	1 7/8 - 12	33.3	47.6	57.2	85.9	59.2
JUE-32T	2	50	2 1/2 - 12	45.2	63.5	73.0	105.2	77.7

• All dimensions in millimeters unless specified as “inch”. Dimension are for reference only, subject to change

JUT
Union Tee

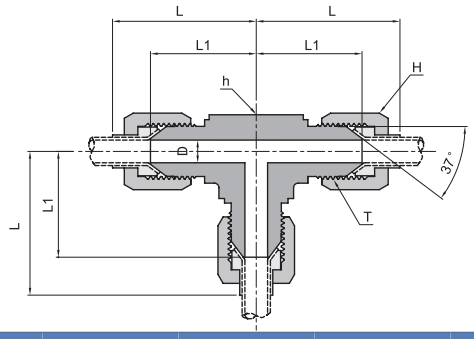

Part Number	Tube O.D.		T (UNF/UN)	D	h (HEX)	H (HEX)	L	L1
	Inch	Metric						
JUT-2T	1/8	3	5/16 - 24	1.6	11.1	9.5	27.4	19.6
JUT-3T	3/16	4	3/8 - 24	3.2	11.1	11.1	30.5	21.1
JUT-4T	1/4	6	7/16 - 20	4.4	11.1	14.3	31.7	22.6
JUT-5T	5/16	8	1/2 - 20	6.0	14.3	15.9	34.5	24.1
JUT-6T	3/8	10	9/16 - 18	7.5	14.3	17.5	38.8	26.9
JUT-8T	1/2	12	3/4 - 16	9.9	19.0	22.2	44.5	31.8
JUT-10T	5/8	16	7/8 - 14	12.3	22.2	25.4	53.4	36.8
JUT-12T	3/4	18	1 1/16 - 12	15.5	27.0	31.8	57.7	42.2
JUT-14T	7/8	22	1 3/16 - 12	18.3	33.3	34.9	63.3	45.7
JUT-16T	1	25	1 5/16 - 12	21.4	33.3	38.1	65.0	46.0
JUT-20T	1 1/4	32	1 5/8 - 12	27.4	41.3	50.8	70.8	52.3
JUT-24T	1 1/2	38	1 7/8 - 12	33.3	47.6	57.2	85.9	59.2
JUT-32T	2	50	2 1/2 - 12	45.2	63.5	73.0	105.2	77.7

JUC
Union Cross

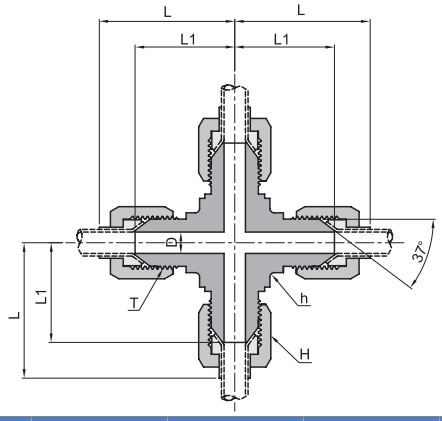

Part Number	Tube O.D.		T (UNF/UN)	D	h (HEX)	H (HEX)	L	L1
	Inch	Metric						
JUC-2T	1/8	3	5/16 - 24	1.6	11.1	9.5	27.4	19.6
JUC-3T	3/16	4	3/8 - 24	3.2	11.1	11.1	30.5	21.1
JUC-4T	1/4	6	7/16 - 20	4.4	11.1	14.3	31.7	22.6
JUC-5T	5/16	8	1/2 - 20	6.0	14.3	15.9	34.5	24.1
JUC-6T	3/8	10	9/16 - 18	7.5	14.3	17.5	38.8	26.9
JUC-8T	1/2	12	3/4 - 16	9.9	19.0	22.2	44.5	31.8
JUC-10T	5/8	16	7/8 - 14	12.3	22.2	25.4	53.4	36.8
JUC-12T	3/4	18	1 1/16 - 12	15.5	27.0	31.8	57.7	42.2
JUC-14T	7/8	22	1 3/16 - 12	18.3	33.3	34.9	63.3	45.7
JUC-16T	1	25	1 5/16 - 12	21.4	33.3	38.1	65.0	46.0
JUC-20T	1 1/4	32	1 5/8 - 12	27.4	41.3	50.8	70.8	52.3
JUC-24T	1 1/2	38	1 7/8 - 12	33.3	47.6	57.2	85.9	59.2
JUC-32T	2	50	2 1/2 - 12	45.2	63.5	73.0	105.2	77.7

• All dimensions in millimeters unless specified as “inch”. Dimension are for reference only, subject to change

JBHU
Bulkhead Union

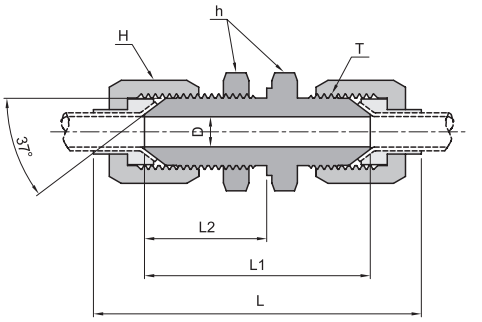

Part Number	Tube O.D.		T (UNF/UN)	D	h (HEX)	H (HEX)	L	L1	L2
	Inch	Metric							
JBHU-2T	1/8	3	5/16 - 24	1.6	14.3	9.5	63.1	47.5	28.2
JBHU-3T	3/16	4	3/8 - 24	3.2	15.9	11.1	67.1	48.3	28.2
JBHU-4T	1/4	6	7/16 - 20	4.4	17.5	14.3	70.8	52.6	30.5
JBHU-5T	5/16	8	1/2 - 20	6.0	19.1	15.9	73.4	52.6	30.5
JBHU-6T	3/8	10	9/16 - 18	7.5	20.6	17.5	79.2	55.4	32.5
JBHU-8T	1/2	12	3/4 - 16	9.9	25.4	22.2	87.4	62.0	36.6
JBHU-10T	5/8	16	7/8 - 14	12.3	28.6	25.4	102.8	69.6	40.1
JBHU-12T	3/4	18	1 1/16 - 12	15.5	34.9	31.8	109.5	78.5	44.4
JBHU-14T	7/8	22	1 3/16 - 12	18.3	38.1	34.9	114.4	79.2	44.4
JBHU-16T	1	25	1 5/16 - 12	21.4	41.3	38.1	117.8	79.8	44.4
JBHU-20T	1 1/4	32	1 5/8 - 12	27.4	47.6	50.8	121.1	84.1	45.7
JBHU-24T	1 1/2	38	1 7/8 - 12	33.3	54.0	57.2	142.8	89.4	46.0
JBHU-32T	2	50	2 1/2 - 12	45.2	69.9	73.0	161.7	106.7	53.1

JBUW
Weld
Bulkhead Union

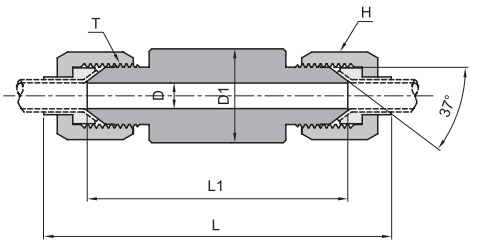

Part Number	Tube O.D.		T (UNF/UN)	D	D1	H (HEX)	L	L1
	Inch	Metric						
JBUW-2T	1/8	3	5/16 - 24	1.6	11.0	9.5	85.6	70.0
JBUW-3T	3/16	4	3/8 - 24	3.2	11.0	11.1	88.8	70.0
JBUW-4T	1/4	6	7/16 - 20	4.4	14.0	14.3	98.2	80.0
JBUW-5T	5/16	8	1/2 - 20	6.0	16.0	15.9	120.8	100.0
JBUW-6T	3/8	10	9/16 - 18	7.5	17.0	17.5	123.8	100.0
JBUW-8T	1/2	12	3/4 - 16	9.9	22.0	22.2	125.4	100.0
JBUW-10T	5/8	16	7/8 - 14	12.3	25.0	25.4	143.2	110.0
JBUW-12T	3/4	18	1 1/16 - 12	15.5	30.0	31.8	151.0	120.0
JBUW-14T	7/8	22	1 3/16 - 12	18.3	32.0	34.9	165.0	130.0
JBUW-16T	1	25	1 5/16 - 12	21.4	40.0	38.1	168.0	130.0
JBUW-20T	1 1/4	32	1 5/8 - 12	27.4	46.0	50.8	177.0	140.0
JBUW-24T	1 1/2	38	1 7/8 - 12	33.3	50.0	57.2	193.4	140.0
JBUW-32T	2	50	2 1/2 - 12	45.2	70.0	73.0	205.0	150.0

• All dimensions in millimeters unless specified as “inch”. Dimension are for reference only, subject to change

JBFC
Bulkhead Female Connector

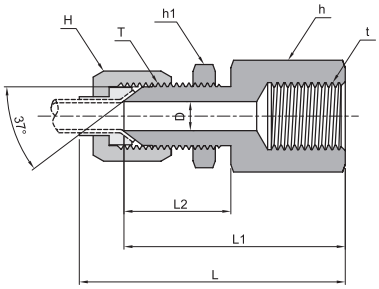

Part Number	Tube O.D.		T (UNF/UN)	*t (NPT)	D	h (HEX)	h1 (HEX)	H (HEX)	L	L1	L2
	Inch	Metric									
JBFC-2T-01N	1/8	3	5/16 - 24	1/8	1.6	14.3	14.3	9.5	49.0	41.2	28.2
JBFC-3T-01N	3/16	4	3/8 - 24	1/8	3.2	14.3	15.9	11.1	50.6	41.2	28.2
JBFC-4T-01N	1/4	6	7/16 - 20	1/8	4.4	14.3	17.5	14.3	52.6	43.5	30.5
JBFC-5T-01N	5/16	8	1/2 - 20	1/8	6.0	14.3	19.1	15.9	53.9	43.5	30.5
JBFC-6T-02N	3/8	10	9/16 - 18	1/4	7.5	19.1	20.6	17.5	62.5	50.5	32.5
JBFC-8T-03N	1/2	12	3/4 - 16	3/8	9.9	22.2	25.4	22.2	69.3	56.6	36.6
JBFC-10T-04N	5/8	16	7/8 - 14	1/2	12.3	28.6	28.6	25.4	82.7	66.1	40.1
JBFC-12T-06N	3/4	18	1 1/16 - 12	3/4	15.5	34.9	34.9	31.8	86.0	71.4	44.4
JBFC-14T-06N	7/8	22	1 3/16 - 12	3/4	18.3	34.9	38.1	34.9	89.0	71.4	44.4
JBFC-16T-08N	1	25	1 5/16 - 12	1	21.4	41.3	41.3	38.1	94.4	75.4	44.4
JBFC-20T-10N	1 1/4	32	1 5/8 - 12	1 1/4	27.4	50.8	47.6	50.8	99.2	80.7	45.7
JBFC-24T-12N	1 1/2	38	1 7/8 - 12	1 1/2	33.3	60.3	54.0	57.2	107.7	81.0	46.0
JBFC-32T-16N	2	50	2 1/2 - 12	2	45.2	73.0	69.9	73.0	120.6	93.1	53.1

*ISO Taper Threads are available upon request.

JBUE
Bulkhead Union Elbow

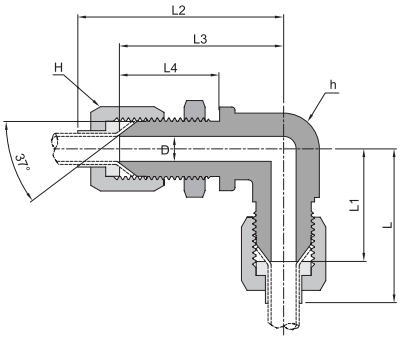

Part Number	Tube O.D.		T (UNF/UN)	D	h (HEX)	H (HEX)	L	L1	L2	L3	L4
	Inch	Metric									
JBUE-2T	1/8	3	5/16 - 24	1.6	11.1	9.5	30.2	22.4	45.9	38.1	23.4
JBUE-3T	3/16	4	3/8 - 24	3.2	11.1	11.1	33.3	23.9	47.5	38.1	23.4
JBUE-4T	1/4	6	7/16 - 20	4.4	11.1	14.3	33.7	24.6	49.5	40.4	25.9
JBUE-5T	5/16	8	1/2 - 20	6.0	14.3	15.9	37.3	26.9	54.1	43.7	25.9
JBUE-6T	3/8	10	9/16 - 18	7.5	14.3	17.5	39.6	27.7	57.9	46.0	27.7
JBUE-8T	1/2	12	3/4 - 16	9.9	19.0	22.2	47.2	34.5	66.3	53.6	31.8
JBUE-10T	5/8	16	7/8 - 14	12.3	22.2	25.4	56.2	39.6	77.3	60.7	35.8
JBUE-12T	3/4	18	1 1/16 - 12	15.5	27.0	31.8	60.7	45.2	83.1	67.6	39.6
JBUE-14T	7/8	22	1 3/16 - 12	18.3	33.3	34.9	66.4	48.8	88.7	71.1	39.6
JBUE-16T	1	25	1 5/16 - 12	21.4	33.3	38.1	68.3	49.3	90.1	71.1	39.6
JBUE-20T	1 1/4	32	1 5/8 - 12	27.4	41.3	50.8	73.6	55.1	97.7	79.2	40.9
JBUE-24T	1 1/2	38	1 7/8 - 12	33.3	47.6	57.2	86.1	59.4	113.6	86.9	41.1
JBUE-32T	2	50	2 1/2 - 12	45.2	63.5	73.0	100.9	73.4	131.9	104.4	48.5

• All dimensions in millimeters unless specified as “inch”. Dimension are for reference only, subject to change

JMC
Male Connector

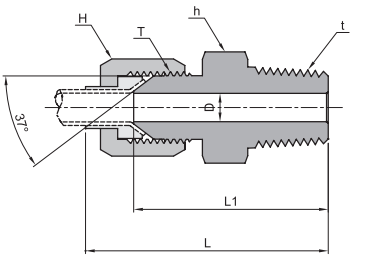

Part Number	Tube O.D.		T (UNF/UN)	*t (NPT)	D	h (HEX)	H (HEX)	L	L1
	Inch	Metric							
JMC-2T-01N	1/8	3	5/16 - 24	1/8	1.6	11.1	9.5	36.0	28.2
JMC-3T-01N	3/16	4	3/8 - 24	1/8	3.2	11.1	11.1	38.4	29.0
JMC-4T-01N	1/4	6	7/16 - 20	1/8	4.4	12.7	14.3	40.1	31.0
JMC-5T-01N	5/16	8	1/2 - 20	1/8	6.0	14.3	15.9	41.4	31.0
JMC-6T-02N	3/8	10	9/16 - 18	1/4	7.5	15.9	17.5	48.2	36.3
JMC-8T-03N	1/2	12	3/4 - 16	3/8	9.9	20.6	22.2	51.6	38.9
JMC-10T-04N	5/8	16	7/8 - 14	1/2	12.3	23.8	25.4	64.6	48.0
JMC-12T-06N	3/4	18	1 1/16 - 12	3/4	15.5	28.6	31.8	67.8	52.3
JMC-14T-06N	7/8	22	1 3/16 - 12	3/4	18.3	31.8	34.9	70.7	53.1
JMC-16T-08N	1	25	1 5/16 - 12	1	21.4	34.9	38.1	77.4	58.4
JMC-20T-10N	1 1/4	32	1 5/8 - 12	1 1/4	27.4	42.9	50.8	80.7	62.2
JMC-24T-12N	1 1/2	38	1 7/8 - 12	1 1/2	33.3	50.8	57.2	94.8	67.8
JMC-32T-16N	2	50	2 1/2 - 12	2	45.2	66.7	73.0	106.5	79.0

*ISO Taper Threads are available upon request.

JME
Male Elbow

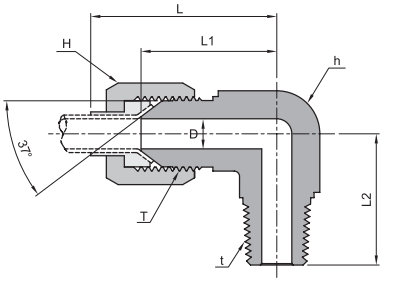

Part Number	Tube O.D.		T (UNF/UN)	*t (NPT)	D	h (HEX)	H (HEX)	L	L1	L2
	Inch	Metric								
JME-2T-01N	1/8	3	5/16 - 24	1/8	1.6	11.1	9.5	27.4	19.6	18.3
JME-3T-01N	3/16	4	3/8 - 24	1/8	3.2	11.1	11.1	30.5	21.1	18.3
JME-4T-01N	1/4	6	7/16 - 20	1/8	4.4	11.1	14.3	31.7	22.6	19.8
JME-5T-01N	5/16	8	1/2 - 20	1/8	6.0	14.3	15.9	34.5	24.1	19.8
JME-6T-02N	3/8	10	9/16 - 18	1/4	7.5	14.3	17.5	38.8	26.9	27.7
JME-8T-03N	1/2	12	3/4 - 16	3/8	9.9	19.0	22.2	44.5	31.8	31.0
JME-10T-04N	5/8	16	7/8 - 14	1/2	12.3	22.2	25.4	53.4	36.8	37.3
JME-12T-06N	3/4	18	1 1/16 - 12	3/4	15.5	27.0	31.8	57.7	42.2	40.4
JME-14T-06N	7/8	22	1 3/16 - 12	3/4	18.3	33.3	34.9	63.3	45.7	42.9
JME-16T-08N	1	25	1 5/16 - 12	1	21.4	33.3	38.1	65.0	46.0	50.0
JME-20T-10N	1 1/4	32	1 5/8 - 12	1 1/4	27.4	41.3	50.8	70.8	52.3	60.5
JME-24T-12N	1 1/2	38	1 7/8 - 12	1 1/2	33.3	47.6	57.2	85.9	59.2	67.1
JME-32T-16N	2	50	2 1/2 - 12	2	45.2	63.5	73.0	105.2	77.7	76.2

*ISO Taper Threads are available upon request.

• All dimensions in millimeters unless specified as “inch”. Dimension are for reference only, subject to change

JMRT
Male Run Tee

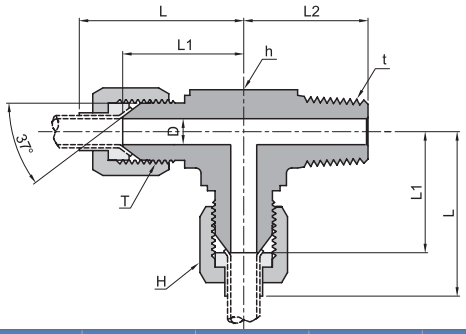

Part Number	Tube O.D.		T (UNF/UN)	*t (NPT)	D	h (HEX)	H (HEX)	L	L1	L2
	Inch	Metric								
JMRT-2T-01N	1/8	3	5/16 - 24	1/8	1.6	11.1	9.5	27.4	19.6	18.3
JMRT-3T-01N	3/16	4	3/8 - 24	1/8	3.2	11.1	11.1	30.5	21.1	18.3
JMRT-4T-01N	1/4	6	7/16 - 20	1/8	4.4	11.1	14.3	31.7	22.6	19.8
JMRT-5T-01N	5/16	8	1/2 - 20	1/8	6.0	14.3	15.9	34.5	24.1	19.8
JMRT-6T-02N	3/8	10	9/16 - 18	1/4	7.5	14.3	17.5	38.8	26.9	27.7
JMRT-8T-03N	1/2	12	3/4 - 16	3/8	9.9	19.0	22.2	44.5	31.8	31.0
JMRT-10T-04N	5/8	16	7/8 - 14	1/2	12.3	22.2	25.4	53.4	36.8	37.3
JMRT-12T-06N	3/4	18	1 1/16 - 12	3/4	15.5	27.0	31.8	57.7	42.2	40.4
JMRT-14T-06N	7/8	22	1 3/16 - 12	3/4	18.3	33.3	34.9	63.3	45.7	42.9
JMRT-16T-08N	1	25	1 5/16 - 12	1	21.4	33.3	38.1	65.0	46.0	50.0
JMRT-20T-10N	1 1/4	32	1 5/8 - 12	1 1/4	27.4	41.3	50.8	70.8	52.3	60.5
JMRT-24T-12N	1 1/2	38	1 7/8 - 12	1 1/2	33.3	47.6	57.2	85.9	59.2	67.1
JMRT-32T-16N	2	50	2 1/2 - 12	2	45.2	63.5	73.0	105.2	77.7	76.2

*ISO Taper Threads are available upon request.

JMBT
Male Branch Tee

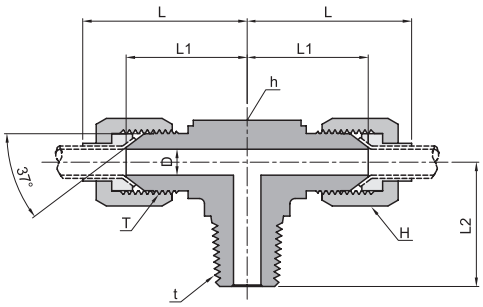

Part Number	Tube O.D.		T (UNF/UN)	*t (NPT)	D	h (HEX)	H (HEX)	L	L1	L2
	Inch	Metric								
JMBT-2T-01N	1/8	3	5/16 - 24	1/8	1.6	11.1	9.5	27.4	19.6	18.3
JMBT-3T-01N	3/16	4	3/8 - 24	1/8	3.2	11.1	11.1	30.5	21.1	18.3
JMBT-4T-01N	1/4	6	7/16 - 20	1/8	4.4	11.1	14.3	31.7	22.6	19.8
JMBT-5T-01N	5/16	8	1/2 - 20	1/8	6.0	14.3	15.9	34.5	24.1	19.8
JMBT-6T-02N	3/8	10	9/16 - 18	1/4	7.5	14.3	17.5	38.8	26.9	27.7
JMBT-8T-03N	1/2	12	3/4 - 16	3/8	9.9	19.0	22.2	44.5	31.8	31.0
JMBT-10T-04N	5/8	16	7/8 - 14	1/2	12.3	22.2	25.4	53.4	36.8	37.3
JMBT-12T-06N	3/4	18	1 1/16 - 12	3/4	15.5	27.0	31.8	57.7	42.2	40.4
JMBT-14T-06N	7/8	22	1 3/16 - 12	3/4	18.3	33.3	34.9	63.3	45.7	42.9
JMBT-16T-08N	1	25	1 5/16 - 12	1	21.4	33.3	38.1	65.0	46.0	50.0
JMBT-20T-10N	1 1/4	32	1 5/8 - 12	1 1/4	27.4	41.3	50.8	70.8	52.3	60.5
JMBT-24T-12N	1 1/2	38	1 7/8 - 12	1 1/2	33.3	47.6	57.2	85.9	59.2	67.1
JMBT-32T-16N	2	50	2 1/2 - 12	2	45.2	63.5	73.0	105.2	77.7	76.2

*ISO Taper Threads are available upon request.

• All dimensions in millimeters unless specified as “inch”. Dimension are for reference only, subject to change

JHME
45° Male Elbow

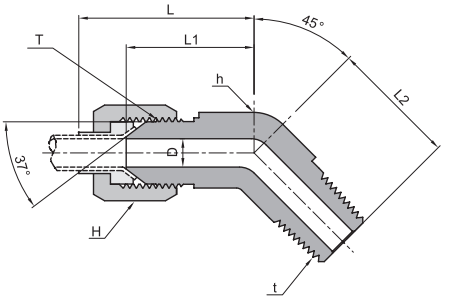

Part Number	Tube O.D.		T (UNF/UN)	*t (NPT)	D	h (HEX)	H (HEX)	L	L1	L2
	Inch	Metric								
JHME-2T-01N	1/8	3	5/16 - 24	1/8	1.6	11.1	9.5	25.3	17.5	13.2
JHME-3T-01N	3/16	4	3/8 - 24	1/8	3.2	11.1	11.0	26.9	17.5	13.2
JHME-4T-01N	1/4	6	7/16 - 20	1/8	4.4	11.1	14.3	27.4	18.3	16.3
JHME-5T-01N	5/16	8	1/2 - 20	1/8	6.0	14.3	15.9	30.0	19.6	16.3
JHME-6T-02N	3/8	10	9/16 - 18	1/4	7.5	14.3	17.5	33.0	21.1	21.8
JHME-8T-03N	1/2	12	3/4 - 16	3/8	9.9	19.0	22.2	37.6	24.9	24.1
JHME-10T-04N	5/8	16	7/8 - 14	1/2	12.3	22.2	25.4	44.8	28.2	29.7
JHME-12T-06N	3/4	18	1 1/16 - 12	3/4	15.5	27.0	31.8	48.0	32.5	30.5
JHME-14T-06N	7/8	22	1 3/16 - 12	3/4	18.3	33.3	34.9	54.4	36.8	33.0
JHME-16T-08N	1	25	1 5/16 - 12	1	21.4	33.3	38.1	56.3	37.3	37.6
JHME-20T-10N	1 1/4	32	1 5/8 - 12	1 1/4	27.4	41.3	50.8	58.9	40.4	42.4
JHME-24T-12N	1 1/2	38	1 7/8 - 12	1 1/2	33.3	47.6	57.2	71.9	45.2	45.0
JHME-32T-16N	2	50	2 1/2 - 12	2	45.2	63.5	73.0	83.9	56.4	53.6

*ISO Taper Threads are available upon request.

JFC
Female Connector

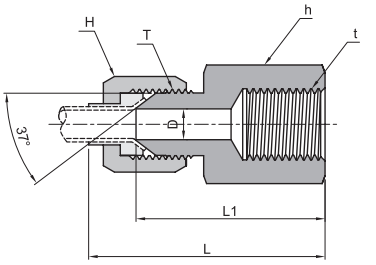

Part Number	Tube O.D.		T (UNF/UN)	*t (NPT)	D	h (HEX)	H (HEX)	L	L1
	Inch	Metric							
JFC-2T-01N	1/8	3	5/16 - 24	1/8	1.6	14.3	9.5	36.2	28.4
JFC-3T-01N	3/16	4	3/8 - 24	1/8	3.2	14.3	11.1	38.1	28.7
JFC-4T-01N	1/4	6	7/16 - 20	1/8	4.4	14.3	14.3	39.3	30.2
JFC-5T-01N	5/16	8	1/2 - 20	1/8	6.0	14.3	15.9	40.1	29.7
JFC-6T-02N	3/8	10	9/16 - 18	1/4	7.5	19.1	17.5	47.5	35.6
JFC-8T-03N	1/2	12	3/4 - 16	3/8	9.9	22.2	22.2	52.3	39.6
JFC-10T-04N	5/8	16	7/8 - 14	1/2	12.3	28.6	25.4	64.6	48.0
JFC-12T-06N	3/4	18	1 1/16 - 12	3/4	15.5	34.9	31.8	67.8	52.3
JFC-14T-06N	7/8	22	1 3/16 - 12	3/4	18.3	34.9	34.9	69.9	52.3
JFC-16T-08N	1	25	1 5/16 - 12	1	21.4	41.3	38.1	78.7	59.7
JFC-20T-10N	1 1/4	32	1 5/8 - 12	1 1/4	27.4	50.8	50.8	81.7	63.2
JFC-24T-12N	1 1/2	38	1 7/8 - 12	1 1/2	33.3	60.3	57.2	93.2	66.5
JFC-32T-16N	2	50	2 1/2 - 12	2	45.2	73.0	73.0	102.9	75.4

*ISO Taper Threads are available upon request.

• All dimensions in millimeters unless specified as “inch”. Dimension are for reference only, subject to change

JFE
Female Elbow

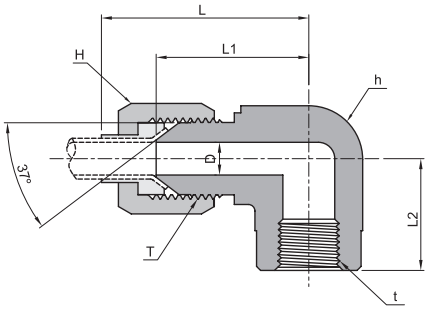

Part Number	Tube O.D.		T (UNF/UN)	*t (NPT)	D	h (HEX)	H (HEX)	L	L1	L2
	Inch	Metric								
JFE-2T-01N	1/8	3	5/16 - 24	1/8	1.6	14.3	9.5	33.2	25.4	16.8
JFE-3T-01N	3/16	4	3/8 - 24	1/8	3.2	14.3	11.1	35.6	26.2	16.8
JFE-4T-01N	1/4	6	7/16 - 20	1/8	4.4	14.3	14.3	36.5	27.4	16.8
JFE-5T-01N	5/16	8	1/2 - 20	1/8	6.0	14.3	15.9	37.8	27.4	16.8
JFE-6T-02N	3/8	10	9/16 - 18	1/4	7.5	19.0	17.5	43.1	31.2	22.4
JFE-8T-03N	1/2	12	3/4 - 16	3/8	9.9	22.2	22.2	48.8	36.1	25.9
JFE-10T-04N	5/8	16	7/8 - 14	1/2	12.3	27.0	25.4	58.3	41.7	31.2
JFE-12T-06N	3/4	18	1 1/16 - 12	3/4	15.5	33.3	31.8	63.5	48.0	34.5
JFE-14T-06N	7/8	22	1 3/16 - 12	3/4	18.3	33.3	34.9	64.8	47.2	36.1
JFE-16T-08N	1	25	1 5/16 - 12	1	21.4	41.3	38.1	74.1	55.1	41.1
JFE-20T-10N	1 1/4	32	1 5/8 - 12	1 1/4	27.4	47.6	50.8	77.7	59.2	43.2
JFE-24T-12N	1 1/2	38	1 7/8 - 12	1 1/2	33.3	65.1	57.2	100.1	73.4	52.8
JFE-32T-16N	2	50	2 1/2 - 12	2	45.2	71.4	73.0	111.3	83.8	60.7

*ISO Taper Threads are available upon request.

JFRT
Female Run Tee

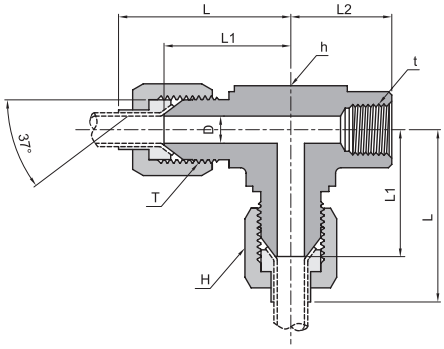

Part Number	Tube O.D.		T (UNF/UN)	*t (NPT)	D	h (HEX)	H (HEX)	L	L1	L2
	Inch	Metric								
JFRT-2T-01N	1/8	3	5/16 - 24	1/8	1.6	14.3	9.5	33.2	25.4	16.8
JFRT-3T-01N	3/16	4	3/8 - 24	1/8	3.2	14.3	11.1	35.6	26.2	16.8
JFRT-4T-01N	1/4	6	7/16 - 20	1/8	4.4	14.3	14.3	36.5	27.4	16.8
JFRT-5T-01N	5/16	8	1/2 - 20	1/8	6.0	14.3	15.9	37.8	27.4	16.8
JFRT-6T-02N	3/8	10	9/16 - 18	1/4	7.5	19.0	17.5	43.1	31.2	22.4
JFRT-8T-03N	1/2	12	3/4 - 16	3/8	9.9	22.2	22.2	48.8	36.1	25.9
JFRT-10T-04N	5/8	16	7/8 - 14	1/2	12.3	27.0	25.4	58.3	41.7	31.2
JFRT-12T-06N	3/4	18	1 1/16 - 12	3/4	15.5	33.3	31.8	63.5	48.0	34.5
JFRT-14T-06N	7/8	22	1 3/16 - 12	3/4	18.3	33.3	34.9	64.8	47.2	36.1
JFRT-16T-08N	1	25	1 5/16 - 12	1	21.4	41.3	38.1	74.1	55.1	41.1
JFRT-20T-10N	1 1/4	32	1 5/8 - 12	1 1/4	27.4	47.6	50.8	77.7	59.2	43.2
JFRT-24T-12N	1 1/2	38	1 7/8 - 12	1 1/2	33.3	65.1	57.2	100.1	73.4	52.8
JFRT-32T-16N	2	50	2 1/2 - 12	2	45.2	71.4	73.0	111.3	83.8	60.7

*ISO Taper Threads are available upon request.

• All dimensions in millimeters unless specified as “inch”. Dimension are for reference only, subject to change

JFBT
Female Branch Tee

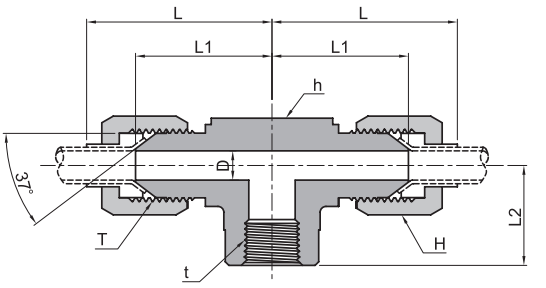

Part Number	Tube O.D.		T (UNF/UN)	*t (NPT)	D	h (HEX)	H (HEX)	L	L1	L2
	Inch	Metric								
JFBT-2T-01N	1/8	3	5/16 - 24	1/8	1.6	14.3	9.5	33.2	25.4	16.8
JFBT-3T-01N	3/16	4	3/8 - 24	1/8	3.2	14.3	11.1	35.6	26.2	16.8
JFBT-4T-01N	1/4	6	7/16 - 20	1/8	4.4	14.3	14.3	36.5	27.4	16.8
JFBT-5T-01N	5/16	8	1/2 - 20	1/8	6.0	14.3	15.9	37.8	27.4	16.8
JFBT-6T-02N	3/8	10	9/16 - 18	1/4	7.5	19.0	17.5	43.1	31.2	22.4
JFBT-8T-03N	1/2	12	3/4 - 16	3/8	9.9	22.2	22.2	48.8	36.1	25.9
JFBT-10T-04N	5/8	16	7/8 - 14	1/2	12.3	27.0	25.4	58.3	41.7	31.2
JFBT-12T-06N	3/4	18	1 1/16 - 12	3/4	15.5	33.3	31.8	63.5	48.0	34.5
JFBT-14T-06N	7/8	22	1 3/16 - 12	3/4	18.3	33.3	34.9	64.8	47.2	36.1
JFBT-16T-08N	1	25	1 5/16 - 12	1	21.4	41.3	38.1	74.1	55.1	41.1
JFBT-20T-10N	1 1/4	32	1 5/8 - 12	1 1/4	27.4	47.6	50.8	77.7	59.2	43.2
JFBT-24T-12N	1 1/2	38	1 7/8 - 12	1 1/2	33.3	65.1	57.2	100.1	73.4	52.8
JFBT-32T-16N	2	50	2 1/2 - 12	2	45.2	71.4	73.0	111.3	83.8	60.7

*ISO Taper Threads are available upon request.

JMC-GO
O-Ring Seal
Male Connector(PF)

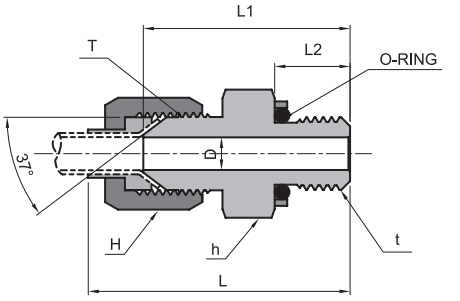

Part Number	Tube O.D.		T (UNF/UN)	t (PF)	D	h (HEX)	H (HEX)	L	L1	L2
	Inch	Metric								
JMC-2T-01GO	1/8	3	5/16 - 24	1/8	1.6	11.1	9.5	35.3	27.5	8.0
JMC-3T-01GO	3/16	4	3/8 - 24	1/8	3.2	12.7	11.1	37.9	28.5	8.0
JMC-4T-01GO	1/4	6	7/16 - 20	1/8	4.4	14.2	14.3	39.3	30.2	8.0
JMC-5T-01GO	5/16	8	1/2 - 20	1/8	6.0	15.8	15.9	40.6	30.2	8.0
JMC-6T-02GO	3/8	10	9/16 - 18	1/4	7.5	17.4	17.5	46.9	35.0	12.0
JMC-8T-03GO	1/2	12	3/4 - 16	3/8	9.9	22.2	22.2	51.4	38.7	12.0
JMC-10T-04GO	5/8	16	7/8 - 14	1/2	12.3	25.4	25.4	61.1	44.5	14.0
JMC-12T-06GO	3/4	18	1 1/16 - 12	3/4	15.5	31.7	31.8	66.4	50.9	16.0
JMC-14T-06GO	7/8	22	1 3/16 - 12	3/4	18.3	34.9	34.9	69.0	51.4	16.0
JMC-16T-08GO	1	25	1 5/16 - 12	1	21.4	38.0	38.1	71.7	52.7	18.0
JMC-20T-10GO	1 1/4	32	1 5/8 - 12	1 1/4	27.4	42.8	50.8	78.5	60.0	20.0
JMC-24T-12GO	1 1/2	38	1 7/8 - 12	1 1/2	33.3	55.0	57.2	92.8	66.1	21.0
JMC-32T-16GO	2	50	2 1/2 - 12	2	45.2	70.0	73.0	108.0	80.5	25.0

• All dimensions in millimeters unless specified as “inch”. Dimension are for reference only, subject to change

JMC-U

O-Ring Seal
Male Connector (UNF/UN)

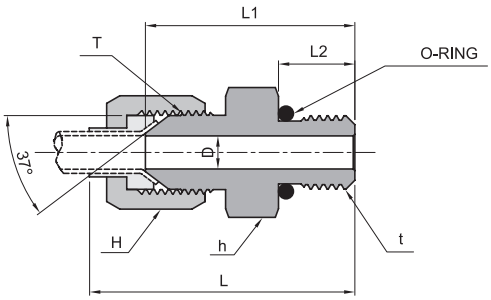

Part Number	Tube O.D.		T (UNF/UN)	t (UNF/UN)	D	h (HEX)	H (HEX)	L	L1	L2
	Inch	Metric								
JMC-2T-02U	1/8	3	5/16 - 24	5/16 - 24	1.6	11.1	9.5	34.7	26.9	7.5
JMC-3T-03U	3/16	4	3/8 - 24	3/8 - 24	3.2	12.7	11.1	37.3	27.9	7.5
JMC-4T-04U	1/4	6	7/16 - 20	7/16 - 20	4.4	14.2	14.3	40.3	31.2	9.1
JMC-5T-05U	5/16	8	1/2 - 20	1/2 - 20	6.0	15.8	15.9	41.6	31.2	9.1
JMC-6T-06U	3/8	10	9/16 - 18	9/16 - 18	7.5	17.4	17.5	44.9	33.0	9.9
JMC-8T-08U	1/2	12	3/4 - 16	3/4 - 16	9.9	22.2	22.2	50.3	37.6	11.1
JMC-10T-10U	5/8	16	7/8 - 14	7/8 - 14	12.3	25.4	25.4	59.8	43.2	12.7
JMC-12T-12U	3/4	18	1 1/16 - 12	1 1/16 - 12	15.5	31.7	31.8	65.5	50.0	15.1
JMC-14T-14U	7/8	22	1 3/16 - 12	1 3/16 - 12	18.3	34.9	34.9	68.1	50.5	15.1
JMC-16T-16U	1	25	1 5/16 - 12	1 5/16 - 12	21.4	38.1	38.1	70.8	51.8	15.1
JMC-20T-20U	1 1/4	32	1 5/8 - 12	1 5/8 - 12	27.4	47.6	50.8	73.6	55.1	15.1
JMC-24T-24U	1 1/2	38	1 7/8 - 12	1 7/8 - 12	33.3	53.9	57.2	86.9	60.2	15.1
JMC-32T-32U	2	50	2 1/2 - 12	2 1/2 - 12	45.2	69.8	73.0	98.1	70.6	15.1

JPME-U

Positionable Male Elbow

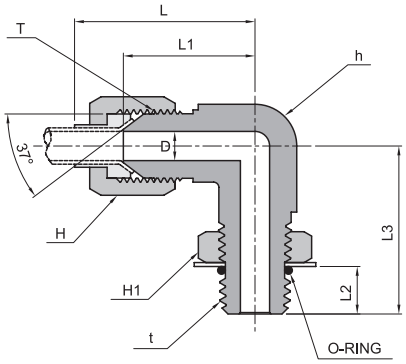

Part Number	Tube O.D.		T (UNF/UN)	t (UNF/UN)	D	h (HEX)	H (HEX)	H1 (HEX)	L	L1	L2	L3
	Inch	Metric										
JPME-2T-02U	1/8	3	5/16 - 24	5/16 - 24	1.6	11.1	9.5	11.1	27.4	19.6	8.4	23.9
JPME-3T-03U	3/16	4	3/8 - 24	3/8 - 24	3.2	11.1	11.1	12.7	30.5	21.1	8.4	23.9
JPME-4T-04U	1/4	6	7/16 - 20	7/16 - 20	4.4	11.1	14.3	14.3	31.7	22.6	9.8	26.2
JPME-5T-05U	5/16	8	1/2 - 20	1/2 - 20	6.0	14.3	15.9	15.9	34.5	24.1	9.8	28.7
JPME-6T-06U	3/8	10	9/16 - 18	9/16 - 18	7.5	14.3	17.5	17.5	38.8	26.9	9.9	31.8
JPME-8T-08U	1/2	12	3/4 - 16	3/4 - 16	9.9	19.0	22.2	22.2	44.5	31.8	11.0	36.8
JPME-10T-10U	5/8	16	7/8 - 14	7/8 - 14	12.3	22.2	25.4	25.4	53.4	36.8	12.5	43.2
JPME-12T-12U	3/4	18	1 1/16 - 12	1 1/16 - 12	15.5	27.0	31.8	31.8	57.7	42.2	16.5	49.3
JPME-14T-14U	7/8	22	1 3/16 - 12	1 3/16 - 12	18.3	33.3	34.9	34.9	63.3	45.7	16.5	50.8
JPME-16T-16U	1	25	1 5/16 - 12	1 5/16 - 12	21.4	33.3	38.1	38.1	65.0	46.0	16.5	52.1
JPME-20T-20U	1 1/4	32	1 5/8 - 12	1 5/8 - 12	27.4	41.3	50.8	47.6	70.8	52.3	16.5	57.2
JPME-24T-24U	1 1/2	38	1 7/8 - 12	1 7/8 - 12	33.3	47.6	57.2	53.9	85.9	59.2	16.5	60.7
JPME-32T-32U	2	50	2 1/2 - 12	2 1/2 - 12	45.2	63.5	73.0	69.8	105.2	77.7	16.5	73.4

• All dimensions in millimeters unless specified as “inch”. Dimension are for reference only, subject to change

JPHME-U

Positionable
45° Male Elbow

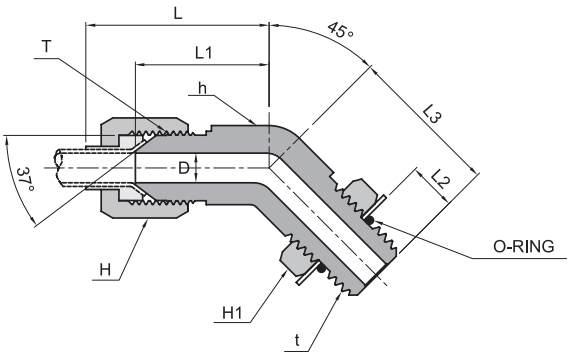

Part Number	Tube O.D.		T (UNF/UN)	t (UNF/UN)	D	h (HEX)	H (HEX)	H1 (HEX)	L	L1	L2	L3
	Inch	Metric										
JPHME-2T-02U	1/8	3	5/16 - 24	5/16 - 24	1.6	11.1	9.5	11.1	25.3	17.5	8.4	23.9
JPHME-3T-03U	3/16	4	3/8 - 24	3/8 - 24	3.2	11.1	11.1	12.7	26.9	17.5	8.4	23.9
JPHME-4T-04U	1/4	6	7/16 - 20	7/16 - 20	4.4	11.1	14.3	14.3	27.4	18.3	9.8	23.9
JPHME-5T-05U	5/16	8	1/2 - 20	1/2 - 20	6.0	14.3	15.9	15.9	30.3	19.6	9.8	25.4
JPHME-6T-06U	3/8	10	9/16 - 18	9/16 - 18	7.5	14.3	17.5	17.5	33.0	21.1	9.9	28.4
JPHME-8T-08U	1/2	12	3/4 - 16	3/4 - 16	9.9	19.0	22.2	22.2	37.6	24.9	11.0	32.5
JPHME-10T-10U	5/8	16	7/8 - 14	7/8 - 14	12.3	22.2	25.4	25.4	44.8	28.2	12.5	36.6
JPHME-12T-12U	3/4	18	1 1/16 - 12	1 1/16 - 12	15.5	27.0	31.8	31.8	48.0	32.5	16.5	43.9
JPHME-14T-14U	7/8	22	1 3/16 - 12	1 3/16 - 12	18.3	33.3	34.9	34.9	54.4	36.8	16.5	45.7
JPHME-16T-16U	1	25	1 5/16 - 12	1 5/16 - 12	21.4	33.3	38.1	38.1	56.3	37.3	16.5	47.2
JPHME-20T-20U	1 1/4	32	1 5/8 - 12	1 5/8 - 12	27.4	41.3	50.8	47.6	58.9	40.4	16.5	48.5
JPHME-24T-24U	1 1/2	38	1 7/8 - 12	1 7/8 - 12	33.3	47.6	57.2	53.9	71.9	45.2	16.5	48.5
JPHME-32T-32U	2	50	2 1/2 - 12	2 1/2 - 12	45.2	63.5	73.0	69.8	83.9	56.4	16.5	47.2

JPMBT-U

Positionable
Male Branch Tee

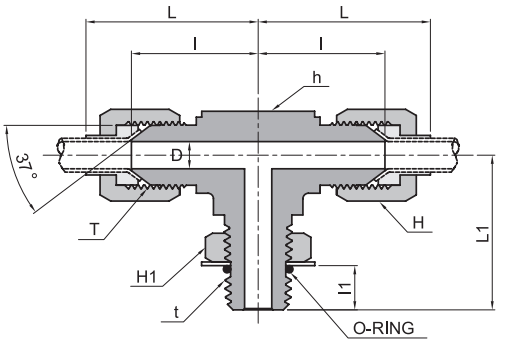

Part Number	Tube O.D.		T (UNF/UN)	t (UNF/UN)	D	h (HEX)	H (HEX)	H1 (HEX)	L	L1	l	l1
	Inch	Metric										
JPMBT-2T-02U	1/8	3	5/16 - 24	5/16 - 24	1.6	11.1	9.5	11.1	27.4	23.9	19.6	8.4
JPMBT-3T-03U	3/16	4	3/8 - 24	3/8 - 24	3.2	11.1	11.1	12.7	30.5	23.9	21.1	8.4
JPMBT-4T-04U	1/4	6	7/16 - 20	7/16 - 20	4.4	11.1	14.3	14.3	31.7	26.2	22.6	9.8
JPMBT-5T-05U	5/16	8	1/2 - 20	1/2 - 20	6.0	14.3	15.9	15.9	34.5	28.7	24.1	9.8
JPMBT-6T-06U	3/8	10	9/16 - 18	9/16 - 18	7.5	14.3	17.5	17.5	38.8	31.8	26.9	9.9
JPMBT-8T-08U	1/2	12	3/4 - 16	3/4 - 16	9.9	19.0	22.2	22.2	44.5	36.8	31.8	11.0
JPMBT-10T-10U	5/8	16	7/8 - 14	7/8 - 14	12.3	22.2	25.4	25.4	53.4	43.2	36.8	12.5
JPMBT-12T-12U	3/4	18	1 1/16 - 12	1 1/16 - 12	15.5	27.0	31.8	31.8	57.7	49.3	42.2	16.5
JPMBT-14T-14U	7/8	22	1 3/16 - 12	1 3/16 - 12	18.3	33.3	35.0	34.9	63.3	50.8	45.7	16.5
JPMBT-16T-16U	1	25	1 5/16 - 12	1 5/16 - 12	21.4	33.3	38.0	38.1	65.0	52.1	46.0	16.5
JPMBT-20T-20U	1 1/4	32	1 5/8 - 12	1 5/8 - 12	37.5	41.3	50.8	47.6	70.8	57.2	52.3	16.5
JPMBT-24T-24U	1 1/2	38	1 7/8 - 12	1 7/8 - 12	33.3	47.6	57.2	53.9	85.9	60.7	59.2	16.5
JPMBT-32T-32U	2	50	2 1/2 - 12	2 1/2 - 12	45.2	63.5	73.0	69.8	105.2	73.4	77.7	16.5

• All dimensions in millimeters unless specified as “inch”. Dimension are for reference only, subject to change

JPMRT-U

Positionable Male Run Tee

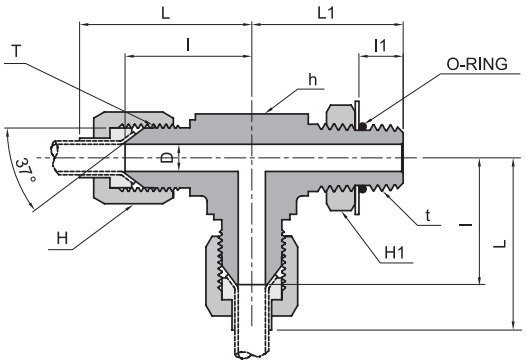

Part Number	Tube O.D.		T (UNF/UN)	t (UNF/UN)	D	h (HEX)	H (HEX)	H1 (HEX)	L	L1	l	l1
	Inch	Metric										
JPMRT-2T-02U	1/8	3	5/16 - 24	5/16 - 24	1.6	11.1	9.5	11.1	27.4	23.9	19.6	8.4
JPMRT-3T-03U	3/16	4	3/8 - 24	3/8 - 24	3.2	11.1	11.1	12.7	30.5	23.9	21.1	8.4
JPMRT-4T-04U	1/4	6	7/16 - 20	7/16 - 20	4.4	11.1	14.3	14.3	31.7	26.2	22.6	9.8
JPMRT-5T-05U	5/16	8	1/2 - 20	1/2 - 20	6.0	14.3	15.9	15.9	34.5	28.7	24.1	9.8
JPMRT-6T-06U	3/8	10	9/16 - 18	9/16 - 18	7.5	14.3	17.5	17.5	38.8	31.8	26.9	9.9
JPMRT-8T-08U	1/2	12	3/4 - 16	3/4 - 16	9.9	19.0	22.2	22.2	44.5	36.8	31.8	11.0
JPMRT-10T-10U	5/8	16	7/8 - 14	7/8 - 14	12.3	22.2	25.4	25.4	53.4	43.2	36.8	12.5
JPMRT-12T-12U	3/4	18	1 1/16 - 12	1 1/16 - 12	15.5	27.0	31.8	31.8	57.7	49.3	42.2	16.5
JPMRT-14T-14U	7/8	22	1 3/16 - 12	1 3/16 - 12	18.3	33.3	34.9	34.9	63.3	50.8	45.7	16.5
JPMRT-16T-16U	1	25	1 5/16 - 12	1 5/16 - 12	21.4	33.3	38.1	38.1	65.0	52.1	46.0	16.5
JPMRT-20T-20U	1 1/4	32	1 5/8 - 12	1 5/8 - 12	27.4	41.3	50.8	47.6	70.8	57.2	52.3	16.5
JPMRT-24T-24U	1 1/2	38	1 7/8 - 12	1 7/8 - 12	33.3	47.6	57.2	53.9	85.9	60.7	59.2	16.5
JPMRT-32T-32U	2	50	2 1/2 - 12	2 1/2 - 12	45.2	63.5	73.0	69.8	105.2	73.4	77.7	16.5

JMSC

Male Swivel Connector

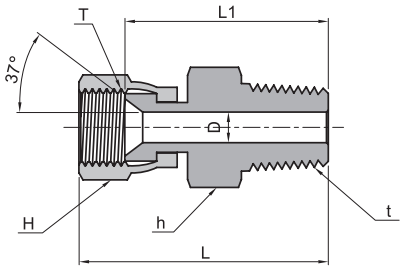

Part Number	Tube O.D.		T (UNF/UN)	*t (NPT)	D	h (HEX)	H (HEX)	L	L1
	Inch	Metric							
JMSC-2T-01N	1/8	3	5/16 - 24	1/8	1.6	11.1	11.1	30.0	22.0
JMSC-3T-01N	3/16	4	3/8 - 24	1/8	3.2	11.1	12.7	32.0	23.5
JMSC-4T-01N	1/4	6	7/16 - 20	1/8	4.4	12.7	14.3	34.2	25.5
JMSC-5T-01N	5/16	8	1/2 - 20	1/8	6.0	14.2	15.9	35.0	25.5
JMSC-6T-02N	3/8	10	9/16 - 18	1/4	7.5	16.0	17.5	40.2	30.7
JMSC-8T-03N	1/2	12	3/4 - 16	3/8	9.9	21.0	22.2	42.7	32.0
JMSC-10T-04N	5/8	16	7/8 - 14	1/2	12.3	23.8	25.4	51.3	38.6
JMSC-12T-06N	3/4	18	1 1/16 - 12	3/4	15.5	29.0	31.8	54.5	40.2
JMSC-14T-06N	7/8	22	1 3/16 - 12	3/4	18.3	32.0	34.9	56.0	41.2
JMSC-16T-08N	1	25	1 5/16 - 12	1	21.4	36.0	38.1	63.7	48.6
JMSC-20T-10N	1 1/4	32	1 5/8 - 12	1 1/4	27.4	46.0	50.8	68.9	53.0
JMSC-24T-12N	1 1/2	38	1 7/8 - 12	1 1/2	33.3	50.0	57.2	77.6	59.0
JMSC-32T-16N	2	50	2 1/2 - 12	2	45.2	66.7	73.0	92.9	69.1

*ISO Taper Threads are available upon request.

• All dimensions in millimeters unless specified as “inch”. Dimension are for reference only, subject to change

JMSC-U

O-Ring Seal
Male Swivel Connector

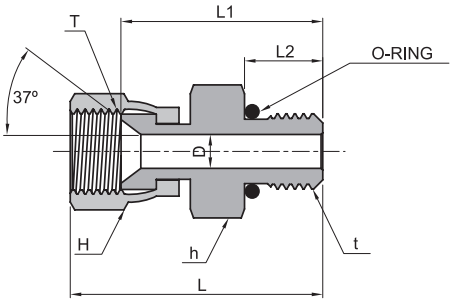

Part Number	Tube O.D.		T (UNF/UN)	t (UNF/UN)	D	h (HEX)	H (HEX)	L	L1	L2
	Inch	Metric								
JMSC-2T-02U	1/8	3	5/16 - 24	5/16 - 24	1.6	11.1	11.1	30.4	22.5	7.5
JMSC-3T-03U	3/16	4	3/8 - 24	3/8 - 24	3.2	12.7	12.7	31.0	22.7	7.5
JMSC-4T-04U	1/4	6	7/16 - 20	7/16 - 20	4.4	14.2	14.3	33.9	25.2	9.1
JMSC-5T-05U	5/16	8	1/2 - 20	1/2 - 20	6.0	15.8	15.9	35.7	26.2	9.1
JMSC-6T-06U	3/8	10	9/16 - 18	9/16 - 18	7.5	17.4	17.5	37.4	27.9	9.9
JMSC-8T-08U	1/2	12	3/4 - 16	3/4 - 16	9.9	22.2	22.2	41.6	30.9	11.1
JMSC-10T-10U	5/8	16	7/8 - 14	7/8 - 14	12.3	25.4	25.4	47.6	34.9	12.7
JMSC-12T-12U	3/4	18	1 1/16 - 12	1 1/16 - 12	15.5	31.8	31.8	54.4	40.1	15.1
JMSC-14T-14U	7/8	22	1 3/16 - 12	1 3/16 - 12	18.3	34.9	34.9	55.6	40.9	15.1
JMSC-16T-16U	1	25	1 5/16 - 12	1 5/16 - 12	21.4	38.1	38.1	56.8	41.7	15.1
JMSC-20T-20U	1 1/4	32	1 5/8 - 12	1 5/8 - 12	27.4	47.6	50.8	63.2	47.3	15.1
JMSC-24T-24U	1 1/2	38	1 7/8 - 12	1 7/8 - 12	33.3	54.0	57.2	71.3	52.7	15.1
JMSC-32T-32U	2	50	2 1/2 - 12	2 1/2 - 12	45.2	70.0	73.0	72.5	58.7	15.1

JFSC

Female Swivel Connector

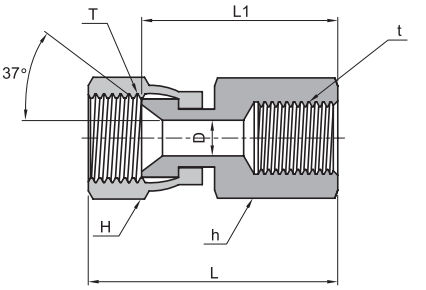

Part Number	Tube O.D.		T (UNF/UN)	*t (NPT)	D	h (HEX)	H (HEX)	L	L1
	Inch	Metric							
JFSC-2T-01N	1/8	3	5/16 - 24	1/8	1.6	14.3	11.1	36.1	28.2
JFSC-3T-01N	3/16	4	3/8 - 24	1/8	3.2	14.3	12.7	37.3	29.0
JFSC-4T-01N	1/4	6	7/16 - 20	1/8	4.4	14.3	14.3	39.7	31.0
JFSC-5T-01N	5/16	8	1/2 - 20	1/8	6.0	14.3	15.9	40.5	31.0
JFSC-6T-02N	3/8	10	9/16 - 18	1/4	7.5	19.1	17.5	45.8	36.3
JFSC-8T-03N	1/2	12	3/4 - 16	3/8	9.9	22.2	22.2	47.0	38.9
JFSC-10T-04N	5/8	16	7/8 - 14	1/2	12.3	28.6	25.4	51.6	48.0
JFSC-12T-06N	3/4	18	1 1/16 - 12	3/4	15.5	34.9	31.8	66.6	52.3
JFSC-14T-06N	7/8	22	1 3/16 - 12	3/4	18.3	34.9	34.9	67.8	53.1
JFSC-16T-08N	1	25	1 5/16 - 12	1	21.4	41.3	38.1	73.5	58.4
JFSC-20T-10N	1 1/4	32	1 5/8 - 12	1 1/4	27.4	50.8	50.8	78.1	62.2
JFSC-24T-12N	1 1/2	38	1 7/8 - 12	1 1/2	33.3	60.3	57.2	86.7	68.1
JFSC-32T-16N	2	50	2 1/2 - 12	2	45.2	73.0	73.0	89.3	65.5

*ISO Taper Threads are available upon request.

• All dimensions in millimeters unless specified as “inch”. Dimension are for reference only, subject to change

JSE
Swivel Elbow

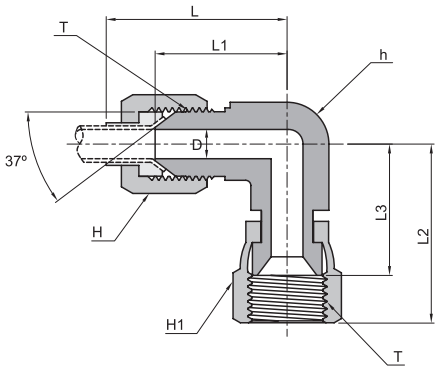

Part Number	Tube O.D.		T (UNF/UN)	D	h (HEX)	H (HEX)	H1 (HEX)	L	L1	L2	L3
	Inch	Metric									
JSE-2T	1/8	3	5/16 - 24	1.6	11.1	9.5	11.1	27.4	19.6	24.6	16.7
JSE-3T	3/16	4	3/8 - 24	3.2	11.1	11.1	12.7	30.5	21.1	25.4	17.1
JSE-4T	1/4	6	7/16 - 20	4.4	11.1	14.3	14.3	31.7	22.6	25.4	16.7
JSE-5T	5/16	8	1/2 - 20	6.0	14.3	15.9	15.9	34.5	24.1	26.9	17.4
JSE-6T	3/8	10	9/16 - 18	7.5	14.3	17.5	17.5	38.8	26.9	31.8	22.3
JSE-8T	1/2	12	3/4 - 16	9.9	19.0	22.2	22.2	44.5	31.8	35.1	24.4
JSE-10T	5/8	16	7/8 - 14	12.3	22.2	25.4	25.4	53.4	36.8	41.1	28.4
JSE-12T	3/4	18	1 1/16 - 12	15.5	27.0	31.8	31.8	57.7	42.2	44.4	30.1
JSE-14T	7/8	22	1 3/16 - 12	18.3	33.3	34.9	34.9	63.3	45.7	45.2	30.5
JSE-16T	1	25	1 5/16 - 12	21.4	33.3	38.1	38.1	65.0	46.0	50.8	35.7
JSE-20T	1 1/4	32	1 5/8 - 12	27.4	41.3	50.8	50.8	70.8	52.3	58.7	42.8
JSE-24T	1 1/2	38	1 7/8 - 12	33.3	47.6	57.2	57.2	85.9	59.2	65.8	47.2
JSE-32T	2	50	2 1/2 - 12	45.2	63.5	73.0	73.0	105.2	77.7	85.9	62.1

JSRT
Swivel Run Tee

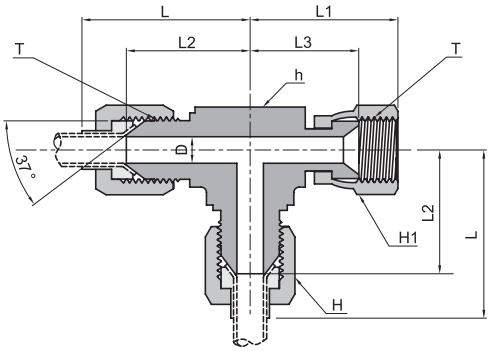

Part Number	Tube O.D.		T (UNF/UN)	D	h (HEX)	H (HEX)	H1 (HEX)	L	L1	L2	L3
	Inch	Metric									
JSRT-2T	1/8	3	5/16 - 24	1.6	11.1	9.5	11.1	27.4	24.6	19.6	16.7
JSRT-3T	3/16	4	3/8 - 24	3.2	11.1	11.1	12.7	30.5	25.4	21.1	17.1
JSRT-4T	1/4	6	7/16 - 20	4.4	11.1	14.3	14.3	31.7	25.4	22.6	16.7
JSRT-5T	5/16	8	1/2 - 20	6.0	14.3	15.9	15.9	34.5	26.9	24.1	17.4
JSRT-6T	3/8	10	9/16 - 18	7.5	14.3	17.5	17.5	38.8	31.8	26.9	22.3
JSRT-8T	1/2	12	3/4 - 16	9.9	19.0	22.2	22.2	44.5	35.1	31.8	24.4
JSRT-10T	5/8	16	7/8 - 14	12.3	22.2	25.4	25.4	53.4	41.1	36.8	28.4
JSRT-12T	3/4	18	1 1/16 - 12	15.5	27.0	31.8	31.8	57.7	44.4	42.2	30.1
JSRT-14T	7/8	22	1 3/16 - 12	18.3	33.3	34.9	34.9	63.3	45.2	45.7	30.5
JSRT-16T	1	25	1 5/16 - 12	21.4	33.3	38.1	38.1	65.0	50.8	46.0	35.7
JSRT-20T	1 1/4	32	1 5/8 - 12	27.4	41.3	50.8	50.8	70.8	58.7	52.3	42.8
JSRT-24T	1 1/2	38	1 7/8 - 12	33.3	47.6	57.2	57.2	85.9	65.8	59.2	47.2
JSRT-32T	2	50	2 1/2 - 12	45.2	63.5	73.0	73.0	105.2	85.9	77.7	62.1

• All dimensions in millimeters unless specified as “inch”. Dimension are for reference only, subject to change

JSBT
Swivel Branch Tee

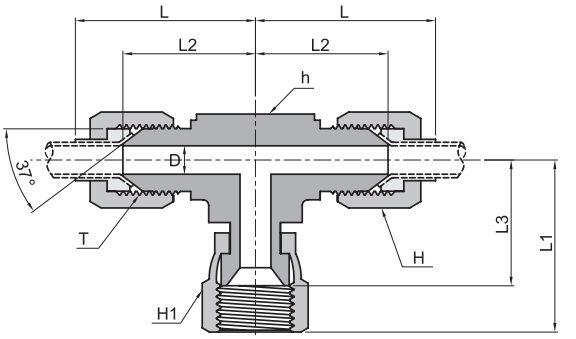

Part Number	Tube O.D.		T (UNF/UN)	D	h (HEX)	H (HEX)	H1 (HEX)	L	L1	L2	L3
	Inch	Metric									
JSBT-2T	1/8	3	5/16 - 24	1.6	11.1	9.5	11.1	27.4	24.6	19.6	16.7
JSBT-3T	3/16	4	3/8 - 24	3.2	11.1	11.1	12.7	30.5	25.4	21.1	17.1
JSBT-4T	1/4	6	7/16 - 20	4.4	11.1	14.3	14.3	31.7	25.4	22.6	16.7
JSBT-5T	5/16	8	1/2 - 20	6.0	14.3	15.9	15.9	34.5	26.9	24.1	17.4
JSBT-6T	3/8	10	9/16 - 18	7.5	14.3	17.5	17.5	38.8	31.8	26.9	22.3
JSBT-8T	1/2	12	3/4 - 16	9.9	19.0	22.2	22.2	44.5	35.1	31.8	24.4
JSBT-10T	5/8	16	7/8 - 14	12.3	22.2	25.4	25.4	53.4	41.1	36.8	28.4
JSBT-12T	3/4	18	1 1/16 - 12	15.5	27.0	38.1	31.8	57.7	44.4	42.2	30.1
JSBT-14T	7/8	22	1 3/16 - 12	18.3	33.3	34.9	34.9	63.3	45.2	45.7	30.5
JSBT-16T	1	25	1 5/16 - 12	21.4	33.3	38.1	38.1	65.0	50.8	46.0	35.7
JSBT-20T	1 1/4	32	1 5/8 - 12	27.4	41.3	50.8	50.8	70.8	58.7	52.3	42.8
JSBT-24T	1 1/2	38	1 7/8 - 12	33.3	47.6	57.2	57.2	85.9	65.8	59.2	47.2
JSBT-32T	2	50	2 1/2 - 12	45.2	63.5	73.0	73.0	105.2	85.9	77.7	62.1

JP
Plug

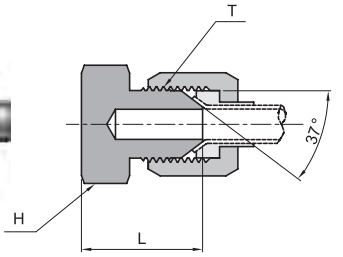

Part Number	Tube O.D.		T (UNF/UN)	H (HEX)	L
	Inch	Metric			
JP-2T	1/8	3	5/16 - 24	11.1	17.8
JP-3T	3/16	4	3/8 - 24	11.1	18.5
JP-4T	1/4	6	7/16 - 20	12.7	20.3
JP-5T	5/16	8	1/2 - 20	14.3	20.3
JP-6T	3/8	10	9/16 - 18	15.9	21.3
JP-8T	1/2	12	3/4 - 16	20.6	23.9
JP-10T	5/8	16	7/8 - 14	25.4	27.9
JP-12T	3/4	18	1 1/16 - 12	28.6	32.5
JP-14T	7/8	22	1 3/16 - 12	31.8	33.3
JP-16T	1	25	1 5/16 - 12	34.9	33.8
JP-20T	1 1/4	32	1 5/8 - 12	42.9	36.8
JP-24T	1 1/2	38	1 7/8 - 12	50.8	41.9
JP-32T	2	50	2 1/2 - 12	66.7	52.1

JC
Tube Cap

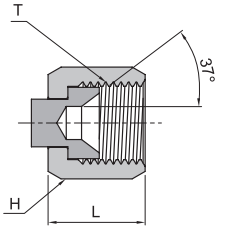

Part Number	Tube O.D.		T (UNF/UN)	H (HEX)	L
	Inch	Metric			
JC-2T	1/8	3	5/16 - 24	9.5	13.7
JC-3T	3/16	4	3/8 - 24	11.1	15.2
JC-4T	1/4	6	7/16 - 20	14.3	15.5
JC-5T	5/16	8	1/2 - 20	15.9	17.0
JC-6T	3/8	10	9/16 - 18	17.5	18.3
JC-8T	1/2	12	3/4 - 16	22.2	21.3
JC-10T	5/8	16	7/8 - 14	25.4	24.6
JC-12T	3/4	18	1 1/16 - 12	31.8	25.9
JC-14T	7/8	22	1 3/16 - 12	34.9	27.4
JC-16T	1	25	1 5/16 - 12	38.1	28.4
JC-20T	1 1/4	32	1 5/8 - 12	50.8	31.0
JC-24T	1 1/2	38	1 7/8 - 12	57.2	35.8
JC-32T	2	50	2 1/2 - 12	73.0	44.2

• All dimensions in millimeters unless specified as “inch”. Dimension are for reference only, subject to change

JRA
Reducer Adapter

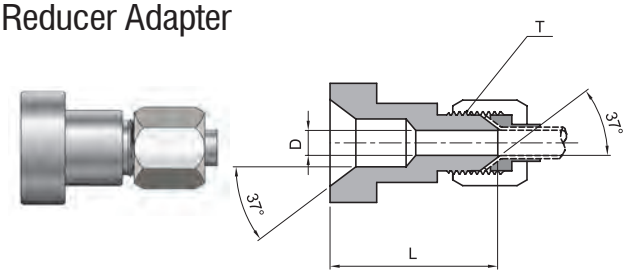

Part Number	Reducing Tube O.D.	T (UNF/UN)	D	L
JRA-6T-4T	3/8 x1/4	7/16 - 20	4.4	24.6
JRA-8T-4T	1/2 x1/4	7/16 - 20	4.4	25.4
JRA-8T-6T	1/2 x3/8	9/16 - 18	7.5	25.4
JRA-10T-4T	5/8 x1/4	7/16 - 20	4.4	26.2
JRA-10T-6T	5/8 x3/8	9/16 - 18	7.5	26.2
JRA-12T-4T	3/4 x1/4	7/16 - 20	4.4	27.7
JRA-12T-6T	3/4 x3/8	9/16 - 18	7.5	27.7
JRA-12T-8T	3/4 x1/2	3/4 - 16	10.0	30.2
JRA-16T-12T	1 x3/4	1 1/16 - 12	15.5	37.3
JRA-20T-12T	1 1/4 x3/4	1 1/16 - 12	15.5	38.3
JRA-20T-16T	1 1/4 x1	1 5/16 - 12	21.5	40.3
JRA-24T-20T	1 1/2 x1 1/4	1 5/8 - 12	27.5	42.9

JLN
Bulkhead Lock Nut

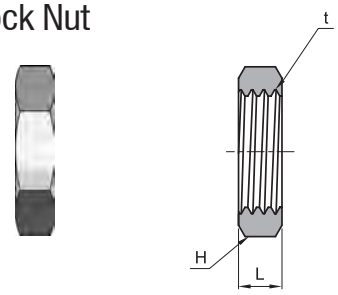

Part Number	Tube O.D.		T (UNF/UN)	H (HEX)	L
	Inch	Metric			
JLN-2T	1/8	3	5/16 - 24	14.3	5.6
JLN-3T	3/16	4	3/8 - 24	15.9	5.6
JLN-4T	1/4	6	7/16 - 20	17.5	7.1
JLN-5T	5/16	8	1/2 - 20	19.1	7.1
JLN-6T	3/8	10	9/16 - 18	20.6	6.9
JLN-8T	1/2	12	3/4 - 16	25.4	7.9
JLN-10T	5/8	16	7/8 - 14	28.6	9.1
JLN-12T	3/4	18	1 1/16 - 12	34.9	10.4
JLN-14T	7/8	22	1 3/16 - 12	38.1	10.4
JLN-16T	1	25	1 5/16 - 12	41.3	10.4
JLN-20T	1 1/4	32	1 5/8 - 12	47.6	10.4
JLN-24T	1 1/2	38	1 7/8 - 12	54.0	10.4
JLN-32T	2	50	2 1/2 - 12	69.9	10.4

JN
Nut

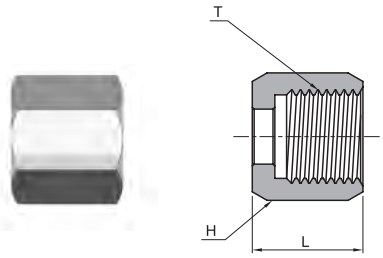

Part Number	Tube O.D.		T (UNF/UN)	H (HEX)	L
	Inch	Metric			
JN-2T	1/8	3	5/16 - 24	9.5	14.0
JN-3T	3/16	4	3/8 - 24	11.1	15.5
JN-4T	1/4	6	7/16 - 20	14.3	15.8
JN-5T	5/16	8	1/2 - 20	15.9	17.3
JN-6T	3/8	10	9/16 - 18	17.5	18.5
JN-8T	1/2	12	3/4 - 16	22.2	21.6
JN-10T	5/8	16	7/8 - 14	25.4	24.9
JN-12T	3/4	18	1 1/16 - 12	31.8	26.2
JN-14T	7/8	22	1 3/16 - 12	34.9	27.7
JN-16T	1	25	1 5/16 - 12	38.1	28.7
JN-20T	1 1/4	32	1 5/8 - 12	50.8	31.2
JN-24T	1 1/2	38	1 7/8 - 12	57.2	36.1
JN-32T	2	50	2 1/2 - 12	73.0	44.5

JS
Sleeve

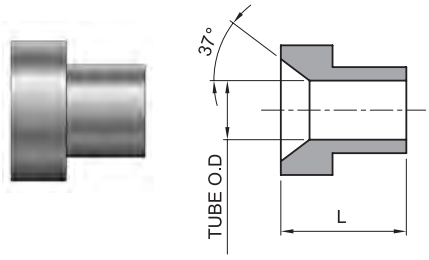

Part Number		Tube O.D.		L	
Inch	Metric	Inch	Metric	Inch	Metric
JS-2T	JS-2MT	1/8	-	8.6	-
JS-3T	JS-3MT	3/16	-	8.6	-
JS-4T	JS-6MT	1/4	6	10.4	10.4
JS-5T	JS-8MT	5/16	8	11.2	11.2
JS-6T	JS-10MT	3/8	10	12.7	12.7
JS-8T	JS-12MT	1/2	12	14.2	14.2
JS-10T	JS-16MT	5/8	16	16.8	16.8
JS-12T	JS-18MT	3/4	18	17.3	17.3
JS-14T	JS-22MT	7/8	22	19.3	19.3
JS-16T	JS-25MT	1	25	19.8	19.8
JS-20T	JS-32MT	1 1/4	32	23.1	23.1
JS-24T	JS-38MT	1 1/2	38	28.4	28.4
JS-32T	JS-50MT	2	50	30.2	30.2

※ Metric Sleeves are used with standard nuts & bodies

• All dimensions in millimeters unless specified as “inch”. Dimension are for reference only, subject to change

37° Flared Tube Fittings (SAE J514)

SUPERLOK®

High Pressure Fittings

www.superlok.com

INDEX

Medium Pressure Fittings

High Pressure Fittings

Medium Pressure Fittings

SMP Series - 20,000 psi (1380 bar)

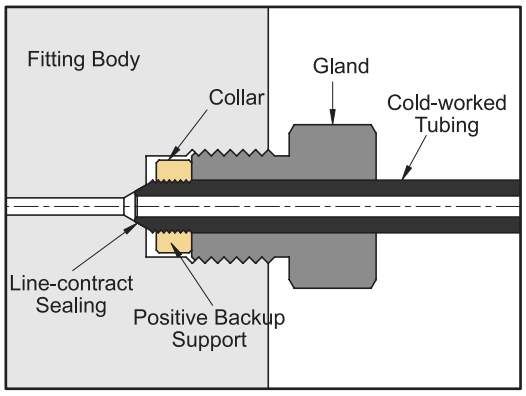

Features

- Pressure to 20,000psi (1380 bar)
- Coned and Threaded connection.
- Available sizes are 1/4″ , 3/8″ , 9/16″ , 3/4″ , and 1″ .
- Fittings manufactured from cold worked 316 stainless steel.
- Operating temperatures from -423°F (-252℃) to 1200°F (649℃)

Tube Size & End Dimension

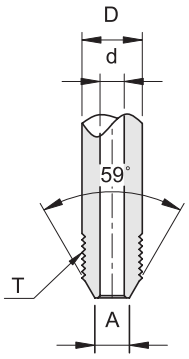

Tube Size. mm				Flow Area mm^2	Working Pressure. psi				
O.D (D)	I.D (d)	A	Thread (T)		-325 to100°F (-198 to 37.8℃)	200°F (93℃)	400°F (204℃)	600°F (316℃)	800°F (427℃)
1/4″(6.35)	2.77	3.57	1/4″ - 28 L.H.	5.81	20,000	20,000	19,250	18,050	16,800
3/8″(9.53)	5.16	6.35	3/8″ - 24 L.H.	20.65	20,000	20,000	19,250	18,050	16,800
9/16″ (14.29)	7.92	10.32	9/16″ - 18 L.H.	49.03	20,000	20,000	19,250	18,050	16,800
	9.12			65.16	15,000	15,000	14,400	13,650	12,670
3/4″ (19.05)	11.13	14.29	3/4″ - 16 L.H.	97.42	20,000	20,000	19,250	18,050	16,800
	13.11			134.84	15,000	15,000	14,400	13,650	12,670
1″ (25.40)	14.27	18.26	1″ - 14 L.H.	160.00	20,000	20,000	19,250	18,050	16,800
	17.48			239.35	15,000	15,000	14,400	13,650	12,670

SMPG

Gland

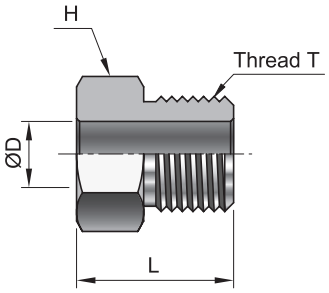

Part No.	Tube Size (in)	Hex H(in)	D	L	Thread T	Pressure Rating psi
SMPG- 4H	1/4″	1/2″	6.4	17.5	7/16″ - 20 UNF	20,000
SMPG- 6H	3/8″	5/8″	9.5	20.6	9/16″ - 18 UNF	20,000
SMPG- 9H	9/16″	7/8″	14.3	27.0	13/16″ - 16 UNF	20,000
SMPG-12H	3/4″	1-1/8″	19.1	28.6	3/4″ - 14 NPSM	20,000
SMPG-16H	1″	1-3/8″	25.4	38.1	1-3/8″ - 12 UNF	20,000

• All dimensions in millimeters unless specified as “inch”. Dimension are for reference only, subject to change.

SMPCR

Collar

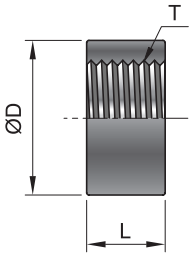

Part No.	Tube Size (in)	D	L	Thread T	Pressure Rating psi
SMPCR- 4H	1/4″	9.5	5.6	1/4″ - 28 L.H.	20,000
SMPCR- 6H	3/8″	11.9	6.4	3/8″ - 24 L.H.	20,000
SMPCR- 9H	9/16″	18.3	7.9	9/16″ - 18 L.H.	20,000
SMPCR-12H	3/4″	23.8	9.5	3/4″ - 16 L.H.	20,000
SMPCR-16H	1″	31.8	12.7	1″ - 14 L.H.	20,000

SMPP

Plug

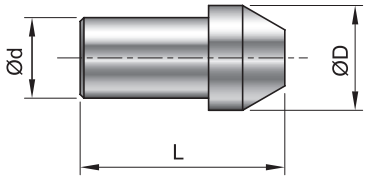

Part No.	Tube Size (in)	d	D	L	Pressure Rating psi
SMPP- 4H	1/4″	6.4	9.5	25.4	20,000
SMPP- 6H	3/8″	9.5	11.9	31.8	20,000
SMPP- 9H	9/16″	14.3	18.3	39.7	20,000
SMPP-12H	3/4″	19.1	23.9	44.5	20,000
SMPP-16H	1″	25.4	31.8	60.3	20,000

SMPE

Elbow

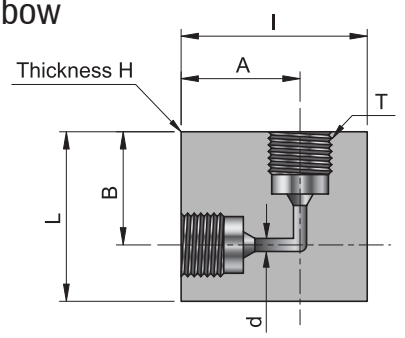

Part No.	Tube Size (in)	d	A	B	I	L	H	T	Pressure Rating psi
SMPE - 4H	1/4″	3.2	22.2	17.5	30.2	25.4	15.9	7/16″ - 20 UNF	20,000
SMPE - 6H	3/8″	5.6	25.4	25.4	34.9	34.9	19.1	9/16″ - 18 UNF	20,000
SMPE - 9H	9/16″	9.1	31.8	31.8	44.5	44.5	25.4	13/16″ - 16 UNF	20,000
SMPE -12H	3/4″	13.1	38.1	38.1	57.2	57.2	34.9	3/4″ - 14 NPSM	20,000
SMPE -16H	1″	17.5	52.4	52.4	76.2	76.2	44.5	1-3/8″ - 12 UNF	20,000

SMPT

Tee

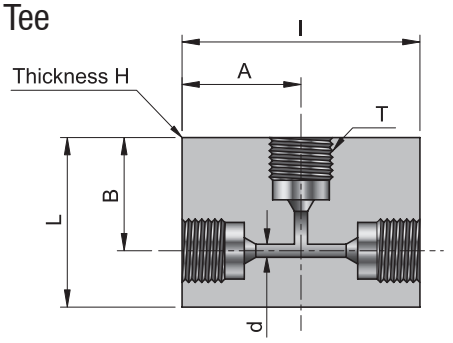

Part No.	Tube Size (in)	d	A	B	I	L	H	T	Pressure Rating psi
SMPT - 4H	1/4″	3.2	22.2	17.5	44.5	25.4	15.9	7/16″ - 20 UNF	20,000
SMPT - 6H	3/8″	5.6	25.4	25.4	50.8	34.9	19.1	9/16″ - 18 UNF	20,000
SMPT - 9H	9/16″	9.1	31.8	31.8	63.5	44.5	25.4	13/16″ - 16 UNF	20,000
SMPT -12H	3/4″	13.1	38.1	38.1	76.2	57.2	34.9	3/4″ - 14 NPSM	20,000
SMPT -16H	1″	17.5	52.4	52.4	104.8	76.2	44.5	1-3/8″ - 12 UNF	20,000

• All dimensions in millimeters unless specified as “inch”. Dimension are for reference only, subject to change.

SMPC

Cross

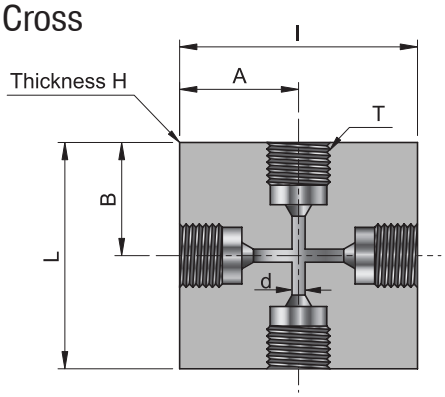

Part No.	Tube Size (in)	d	A	B	I	L	H	T	Pressure Rating psi
SMPC - 4H	1/4″	3.2	22.2	17.5	44.5	34.9	15.9	7/16″ - 20 UNF	20,000
SMPC - 6H	3/8″	5.6	25.4	25.4	50.8	50.8	19.1	9/16″ - 18 UNF	20,000
SMPC - 9H	9/16″	9.1	31.8	31.8	63.5	63.5	25.4	13/16″ - 16 UNF	20,000
SMPC -12H	3/4″	13.1	38.1	38.1	76.2	76.2	34.9	3/4″ - 14 NPSM	20,000
SMPC -16H	1″	17.5	52.4	52.4	104.8	104.8	44.5	1-3/8″ - 12 UNF	20,000

SMPSC

Straight Coupling

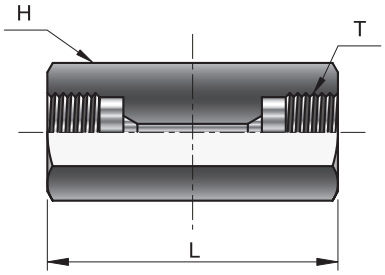

Part No.	Tube Size (in)	Hex H (in)	Orifice	L	T	Pressure Rating psi
SMPSC - 4H	1/4″	5/8″	3.2	39.7	7/16″ - 20 UNF	20,000
SMPSC - 6H	3/8″	3/4″	5.6	44.5	9/16″ - 18 UNF	20,000
SMPSC - 9H	9/16″	1″	9.1	54.0	13/16″ - 16 UNF	20,000
SMPSC -12H	3/4″	1 - 3/8″	13.1	63.5	3/4″ - 14 NPSM	20,000
SMPSC -16H	1″	1 - 3/4″	17.5	88.9	1-3/8″ - 12 UNF	20,000

SMPUC

Union Coupling (Slip Type)

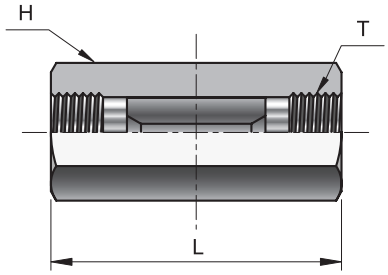

Part No.	Tube Size (in)	Hex H (in)	Orifice	L	T	Pressure Rating psi
SMPUC - 4H	1/4″	5/8″	3.2	39.7	7/16″ - 20 UNF	20,000
SMPUC - 6H	3/8″	3/4″	5.6	44.5	9/16″ - 18 UNF	20,000
SMPUC - 9H	9/16″	1″	9.1	54.0	13/16″ - 16 UNF	20,000
SMPUC -12H	3/4″	1 - 3/8″	13.1	63.5	3/4″ - 14 NPSM	20,000
SMPUC -16H	1″	1 - 3/4″	17.5	88.9	1-3/8″ - 12 UNF	20,000

SMPBC

Bulkhead Coupling

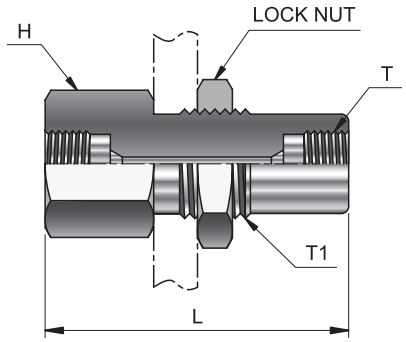

Part No.	Tube Size (in)	Hex H (in)	Orifice	L	T	T1	Pressure Rating psi
SMPBC - 4H	1/4″	1″	3.2	47.6	7/16″ - 20 UNF	3/4″ - 16 UNF	20,000
SMPBC - 6H	3/8″	1″	5.6	50.8	9/16″ - 18 UNF	7/8″ - 14 UNF	20,000
SMPBC - 9H	9/16″	1-3/8″	9.1	60.3	13/16″ - 16 UNF	1-1/16″ - 12 UNF	20,000
SMPBC -12H	3/4″	1-7/8″	13.1	66.7	3/4″ - 14 NPSM	1-5/8″ - 12 UNF	20,000
SMPBC -16H	1″	2-1/8″	17.5	88.9	1-3/8″ - 12 UNF	1-7/8″ - 12 UNF	20,000

• All dimensions in millimeters unless specified as “inch”. Dimension are for reference only, subject to change.

SMPCP

Cap

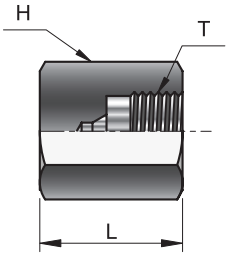

Part No.	Tube Size (in)	Hex H (in)	L	T	Pressure Rating psi
SMPCP - 4H	1/4″	5/8″	22.2	7/16″ - 20 UNF	20,000
SMPCP - 6H	3/8″	3/4″	34.9	9/16″ - 18 UNF	20,000
SMPCP - 9H	9/16″	1″	38.1	13/16″ - 16 UNF	20,000
SMPCP -12H	3/4″	1 - 3/8″	63.5	3/4″ - 14 NPSM	20,000
SMPCP -16H	1″	1 - 3/4″	76.2	1-3/8″ - 12 UNF	20,000

SMPN

Nipple

For rapid system make-up, SUPERLOK® supplies precut, coned-and-threaded nipples in various sizes and lenghts for SUPERLOK® medium pressure fittings.

Special lengths

In addition to the standard lengths listed in the table below, nipples are available in any custom length.
Consult factory.

Materials

Part numbers in table refer to Type 316 Stainless steel.
Optional materials available. Consult factory.

Tube Size In (mm)		Part No. Nipple Length In (mm)							Working Pressure at 100°F psi
O.D.	I.D.	2.75″ (69.9)	3″ (76.2)	4″ (101.6)	6″ (152.4)	8″ (203.2)	10″ (254)	12″ (304.8)	
1/4″ (6.35)	0.109″ (2.77)	SMPN-4-2.75L	SMPN-4-3L	SMPN-4-4L	SMPN-4-6L	SMPN-4-8L	SMPN-4-10L	SMPN-4-12L	20,000
3/8″ (9.53)	0.203″ (5.16)		SMPN-6-3L	SMPN-6-4L	SMPN-6-6L	SMPN-6-8L	SMPN-6-10L	SMPN-6-12L	20,000
9/16″ (14.29)	0.312″ (7.92)			SMPN-9-4L	SMPN-9-6L	SMPN-9-8L	SMPN-9-10L	SMPN-9-12L	20,000
3/4″ (19.05)	0.438″ (11.13)				SMPN-12-6L	SMPN-12-8L	SMPN-12-10L	SMPN-12-12L	20,000
	0.515″ (13.09)				SMPN10-12-6L	SMPN10-12-8L	SMPN10-12-10L	SMPN10-12-12L	10,000
1″ (25.4)	0.562″ (14.27)				SMPN-16-6L	SMPN-16-8L	SMPN-16-10L	SMPN-16-12L	20,000
	0.687″ (17.45)				SMPN10-16-6L	SMPN10-16-8L	SMPN10-16-10L	SMPN10-16-12L	10,000

• All dimensions in millimeters unless specified as “inch”. Dimension are for reference only, subject to change.

Anti - Vibration Collet Gland - Pressure to 20,000psi

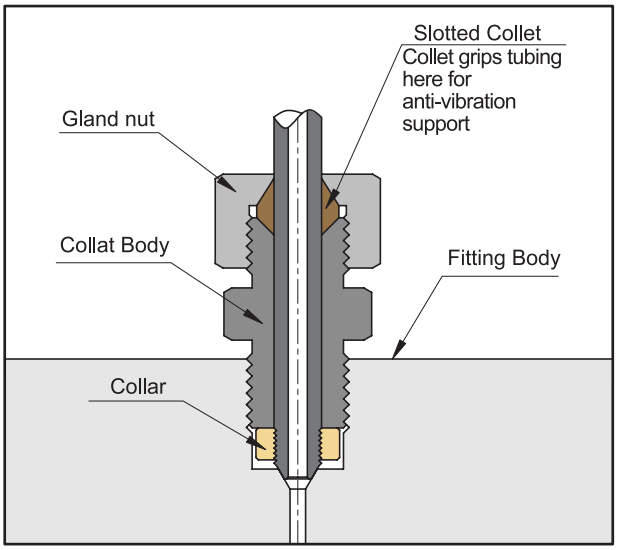

For extreme conditions of vibration and(or) shock in tubing systems, such as an unsupported line near a compressor, coned and threaded connections are offered with the **SUPERLOK®** anti-vibration collet gland assembly. Completely interchangeable with standard **SUPERLOK®** medium pressure connections, the collet gland assembly provides equally effective pressure handling capability. In standard connection systems, the bending stresses on the threaded area of the tubing imposed by excessive vibration or movement may cause premature fatigue failure of the tubing at the back of the thread. By moving the stress concentration back to the unthreaded part of the tubing and providing a wedge-type gripping action, the **SUPERLOK®** anti-vibration collet galnd assembly strengthens the entire structure. With stress concenrtation reduced and overall stress level maintained well below the endurance limit of the material, the result is virtually unlimited vibrational fatigue life.

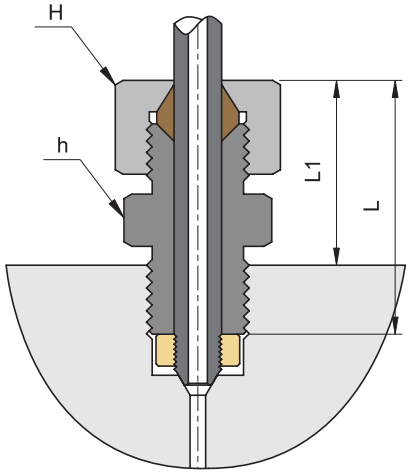

Part No.	Tube Size (in)	Hex H (in)		L1	L	Collar
		h	H			
SMP-AVCG- 4H	1/4″	1/2″	5/8″	23.9	30.2	SMPCR- 4
SMP-AVCG- 6H	3/8″	5/8″	3/4″	30.2	38.1	SMPCR- 6
SMP-AVCG- 9H	9/16″	7/8″	7/8″	35.8	45.2	SMPCR- 9
SMP-AVCG-12H	3/4″	1 - 1/8″	1 - 1/8″	40.4	50.8	SMPCR-12
SMP-AVCG-16H	1″	1 - 3/8″	1 - 3/8″	42.9	60.5	SMPCR-16

• All dimensions in millimeters unless specified as “inch”. Dimension are for reference only, subject to change.

High Pressure Fittings

SHP Series - 60,000 psi (4137 bar)

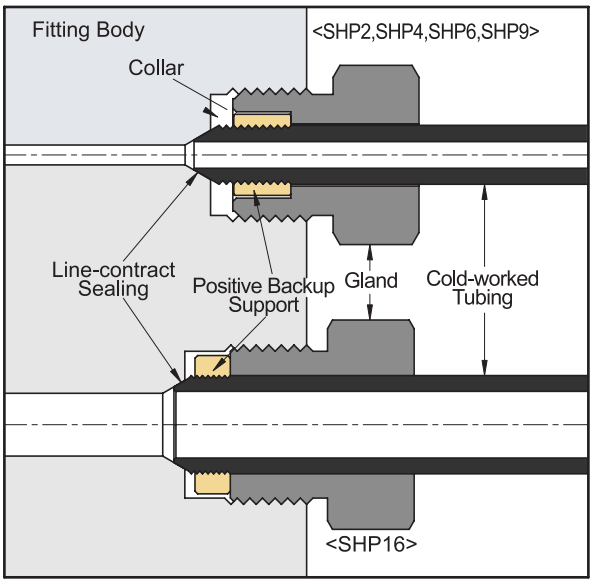

Features

- Pressure to 60,000 psi (4137 bar)
- Increased pressure handling capabilities.
- Coned and Threaded connection.
- Available sizes are 1/8″ , 1/4″ , 3/8″ , 9/16″ and 1″ .
- Fittings manufactured from cold worked 316 stainless steel.
- Operating temperatures from -423°F (-252℃) to 1200°F (649℃)
- Anti-vibration connection components available.

Tube Size & end Dimension

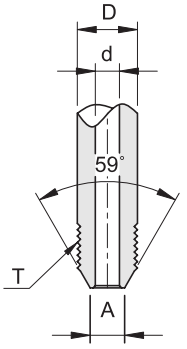

Tube Size mm				Flow Area mm²	Working Pressure psi				
O.D (D)	I.D (d)	A	Thread (T)		-325 to100°F (-198 to37.8℃)	200°F (93℃)	400°F (204℃)	600°F (316℃)	800°F (427℃)
1/8″(3.18)	0.51	1.59	1/8″- 40 L.H.	0.203	60,000	60,000	57,750	54,250	50,700
1/4″(6.35)	2.77	3.18	1/4″- 28 L.H.	3.23	60,000	60,000	57,750	54,250	50,700
3/8″(9.53)	5.16	5.56	3/8″- 24 L.H.	7.74	60,000	60,000	57,750	54,250	50,700
9/16″ (14.29)	4.78	7.14	9/16″ - 18 L.H.	18.06	60,000	60,000	57,750	54,250	50,700
	6.35			30.97	40,000	40,000	38,500	36,100	33,800
1″(25.40)	11.13	14.29	1″ - 14 L.H.	97.42	43,000	43,000	43,000	41,380	36,330

SHPG

Gland

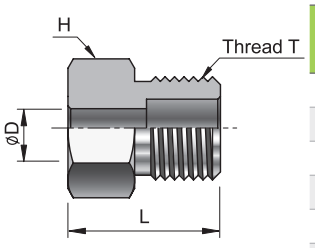

Part No.	Tube Size (in)	Hex H (in)	D	L	T	Pressure Rating psi
SHPG - 2H	1/8″	1/2″	3.2	19.1	1/2″ - 20 UNF	60,000
SHPG - 4H	1/4″	5/8″	6.4	20.6	9/16″ - 18 UNF	60,000
SHPG - 6H	3/8″	13/16″	9.5	23.8	3/4″ - 16 UNF	60,000
SHPG - 9H	9/16″	1-3/16″	14.3	34.9	1-1/8″ - 12 UNF	60,000
SHPG40 - 9H	9/16″	1-3/16″	14.3	34.9	1-1/8″ - 12 UNF	40,000
SHPG30 -16H	1″	1-3/8″	25.4	38.1	1-3/8″ - 12 UNF	30,000

• All dimensions in millimeters unless specified as “inch”. Dimension are for reference only, subject to change.

SHPCR

Collar

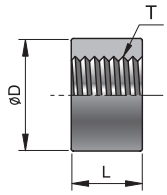

Part No.	Tube Size (in)	D	L	Thread T	Pressure Rating psi
SHPCR - 2H	1/8″	6.4	7.9	1/8″ - 40 L.H.	60,000
SHPCR - 4H	1/4″	9.5	9.5	1/4″ - 28 L.H.	60,000
SHPCR - 6H	3/8″	12.7	13.5	3/8″ - 24 L.H.	60,000
SHPCR - 9H	9/16″	20.6	15.9	9/16″ - 18 L.H.	60,000
SHPCR40 - 9H	9/16″	20.6	15.9	3/4″ - 16 L.H.	40,000
SHPCR30 -16H	1″	31.8	12.7	1″ - 14 L.H.	30,000

SHPP

Plug

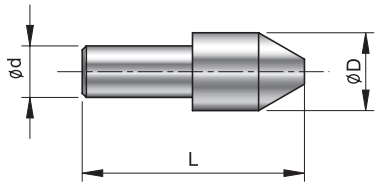

Part No.	Tube Size (in)	d	D	L	Pressure Rating psi
SHPP - 2H	1/8″	3.2	6.4	22.2	60,000
SHPP - 4H	1/4″	6.4	9.5	28.6	60,000
SHPP - 6H	3/8″	9.5	12.7	33.3	60,000
SHPP - 9H	9/16″	14.3	20.6	44.5	60,000

SHPE

Elbow

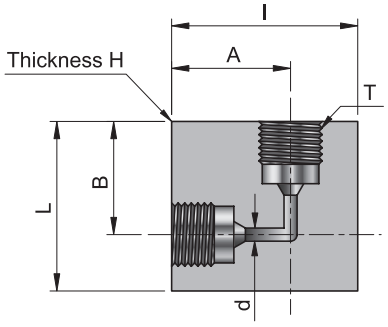

Part No.	Tube Size (in)	d	A	B	I	L	H	T	Pressure Rating psi
SHPE - 2H	1/8″	1.2	19.1	19.1	28.6	28.6	19.1	1/2″ - 20 UNF	60,000
SHPE - 4H	1/4″	2.4	22.2	25.4	34.9	38.1	25.4	9/16″ - 18 UNF	60,000
SHPE - 6H	3/8″	4.8	31.8	25.4	44.5	38.1	25.4	3/4″ - 16 UNF	60,000
SHPE - 9H	9/16″	6.4	47.6	28.6	66.7	47.6	38.1	1-1/8″ - 12 UNF	60,000
SHPE40 - 9H	9/16″	6.4	47.6	28.6	66.7	47.6	38.1	1-1/8″ - 12 UNF	40,000
SHPE30 -16H	1″	11.1	52.4	52.4	76.2	76.2	44.5	1-3/8″ - 12 UNF	30,000

• All dimensions in millimeters unless specified as “inch”. Dimension are for reference only, subject to change.

SHPT

Tee

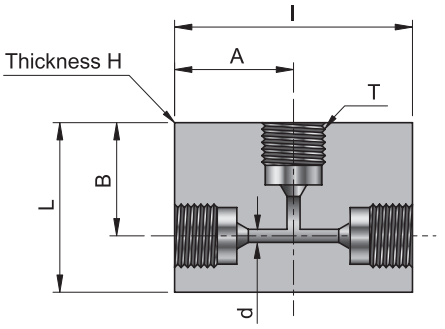

Part No.	Tube Size (in)	d	A	B	I	L	H	T	Pressure Rating psi
SHPT - 2H	1/8″	1.2	19.1	17.5	38.1	28.6	19.1	1/2″ - 20 UNF	60,000
SHPT - 4H	1/4″	2.4	25.4	25.4	50.8	34.9	25.4	9/16″ - 18 UNF	60,000
SHPT - 6H	3/8″	4.8	25.4	31.8	50.8	39.7	25.4	3/4″ - 16 UNF	60,000
SHPT - 9H	9/16″	6.4	33.3	34.9	66.7	54.0	38.1	1-1/8″ - 12 UNF	60,000
SHPT40 - 9H	9/16″	6.4	33.3	34.9	66.7	54.0	38.1	1-1/8″ - 12 UNF	40,000
SHPT30 -16H	1″	11.1	52.4	52.4	104.8	76.2	44.5	1-3/8″ - 12 UNF	30,000

SHPC

Cross

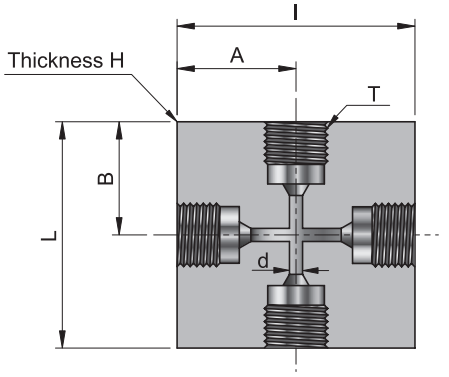

Part No.	Tube Size (in)	d	A	B	I	L	H	T	Pressure Rating psi
SHPC - 2H	1/8″	1.2	19.1	19.1	38.1	38.1	19.1	1/2″ - 20 UNF	60,000
SHPC - 4H	1/4″	2.4	25.4	19.1	50.8	38.1	25.4	9/16″ - 18 UNF	60,000
SHPC - 6H	3/8″	4.8	27.0	25.4	54.0	50.8	25.4	3/4″ - 16 UNF	60,000
SHPC - 9H	9/16″	6.4	34.9	33.3	69.9	66.7	38.1	1-1/8″ - 12 UNF	60,000
SHPC40 - 9H	9/16″	6.4	34.9	33.3	69.9	66.7	38.1	1-1/8″ - 12 UNF	40,000
SHPC30 -16H	1″	11.1	52.4	52.4	104.8	104.8	44.5	1-3/8″ - 12 UNF	30,000

SHPSC

Straight Coupling

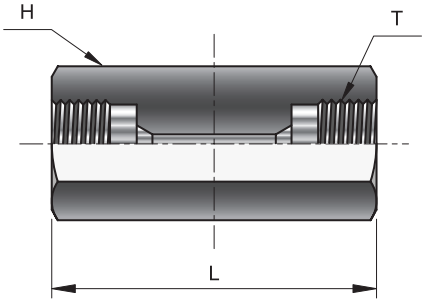

Part No.	Tube Size (in)	Hex H (in)	Orifice	L	T	Pressure Rating psi
SHPSC - 2H	1/8″	3/4″	1.2	28.6	1/2″ - 20 UNF	60,000
SHPSC - 4H	1/4″	1″	2.4	44.5	9/16″ - 18 UNF	60,000
SHPSC - 6H	3/8″	1″	4.8	50.8	3/4″ - 16 UNF	60,000
SHPSC - 9H	9/16″	1 - 3/8″	6.4	60.3	1-1/8″ - 12 UNF	60,000
SHPSC40 - 9H	9/16″	1 - 3/8″	6.4	60.3	1-1/8″ - 12 UNF	40,000
SHPSC30 -16H	1″	1 - 3/4″	11.1	88.9	1-3/8″ - 12 UNF	30,000

• All dimensions in millimeters unless specified as “inch”. Dimension are for reference only, subject to change.

SHPUC

Union Coupling (Slip Type)

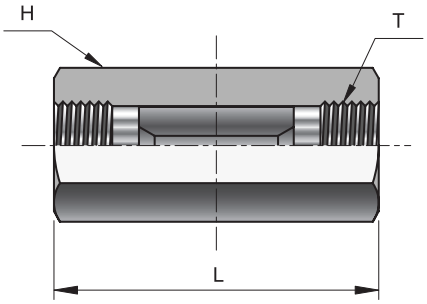

Part No.	Tube Size (in)	Hex H (in)	Orifice	L	T	Pressure Rating psi
SHPUC - 2H	1/8″	3/4″	1.2	28.6	1/2″ - 20 UNF	60,000
SHPUC - 4H	1/4″	1″	2.4	44.5	9/16″ - 18 UNF	60,000
SHPUC - 6H	3/8″	1″	4.8	50.8	3/4″ - 16 UNF	60,000
SHPUC - 9H	9/16″	1 - 3/8″	6.4	60.3	1-1/8″ - 12 UNF	60,000
SHPUC40 - 9H	9/16″	1 - 3/8″	6.4	60.3	1-1/8″ - 12 UNF	40,000
SHPUC30 -16H	1″	1 - 3/4″	11.1	88.9	1-3/8″ - 12 UNF	30,000

SHPBC

Bulkhead Coupling

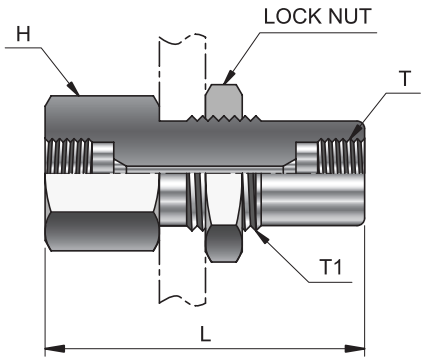

Part No.	Tube Size (in)	Hex H (in)	Orifice	L	T	T1	Pressure Rating psi
SHPBC - 2H	1/8″	1″	1.2	46.0	1/2″ - 20 UNF	7/8″ - 14 UNF	60,000
SHPBC - 4H	1/4″	1″	2.4	50.8	9/16″ - 18 UNF	7/8″ - 14 UNF	60,000
SHPBC - 6H	3/8″	1-3/8″	4.8	60.3	3/4″ - 16 UNF	1-1/16″ - 12 UNF	60,000
SHPBC - 9H	9/16″	1-7/8″	6.4	69.9	1-1/8″ - 12 UNF	1-5/8″ - 12 UNF	60,000
SHPBC40 - 9H	9/16″	1-7/8″	6.4	69.9	1-1/8″ - 12 UNF	1-5/8″ - 12 UNF	40,000
SHPBC30 -16H	1″	1-7/8″	11.1	88.9	1-3/8″ - 12 UNF	2-1/8″ - 12 UNF	30,000

SHPCP

Cap

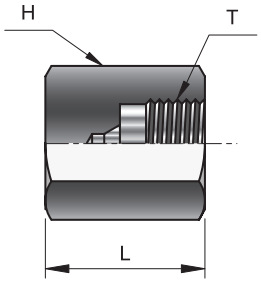

Part No.	Tube Size (in)	Hex H (in)	L	T	Pressure Rating psi
SHPCP - 2H	1/8″	3/4″	22.2	1/2″ - 20 UNF	60,000
SHPCP - 4H	1/4″	3/4″	22.2	9/16″ - 18 UNF	60,000
SHPCP - 6H	3/8″	1″	31.8	3/4″ - 16 UNF	60,000
SHPCP - 9H	9/16″	1 - 3/8″	38.1	1-1/8″ - 12 UNF	60,000
SHPCP40 - 9H	9/16″	1 - 3/8″	38.1	1-1/8″ - 12 UNF	40,000
SHPCP30 -16H	1″	1 - 3/4″	76.2	1-3/8″ - 12 UNF	30,000

• All dimensions in millimeters unless specified as “inch”. Dimension are for reference only, subject to change.

SHPN

Nipple

For rapid system make-up, SUPERLOK® supplies precut, coned-and-threaded nipples in various sizes and lenghts for SUPERLOK® high pressure fittings.

Special lengths

In addition to the standard lengths listed in the table below, nipples are available in any custom length.
Consult factory.

Materials

Part numbers in table refer to Type 316 Stainless steel.
Optional materials available. Consult factory.

Tube Size In (mm)		Part No.							Working Pressure at 100°F psi
		Nipple Length In (mm)							
O.D.	I.D.	2.75″ (69.9)	3″ (76.2)	4″ (101.6)	6″ (152.4)	8″ (203.2)	10″ (254)	12″ (304.8)	
1/8″ (3.18)	0.020″ (0.51)	SHPN-4-2.75L	SHPN-2-3L	SHPN-2-4L	SHPN-2-6L	SHPN-2-8L	SHPN-2-10L	SHPN-2-12L	60,000
1/4″ (6.35)	0.083″ (2.11)	SHPN-4-2.75L	SHPN-4-3L	SHPN-4-4L	SHPN-4-6L	SHPN-4-8L	SHPN-4-10L	SHPN-4-12L	60,000
3/8″ (9.53)	0.125″ (3.18)		SHPN-6-3L	SHPN-6-4L	SHPN-6-6L	SHPN-6-8L	SHPN-6-10L	SHPN-6-12L	60,000
9/16″ (14.29)	0.188″ (4.78)			SHPN-9-4L	SHPN-9-6L	SHPN-9-8L	SHPN-9-10L	SHPN-9-12L	60,000
	0.250″ (6.35)			SHPN40-9-4L	SHPN40-9-6L	SHPN40-9-8L	SHPN40-9-10L	SHPN40-9-12L	40,000
1″ (25.4)	0.437″ (11.09)				SHPN30-16-6L	SHPN30-16-8L	SHPN30-16-10L	SHPN30-16-12L	30,000

• All dimensions in millimeters unless specified as “inch”. Dimension are for reference only, subject to change.

Anti - Vibration Collet Gland - Pressure to 60,000psi

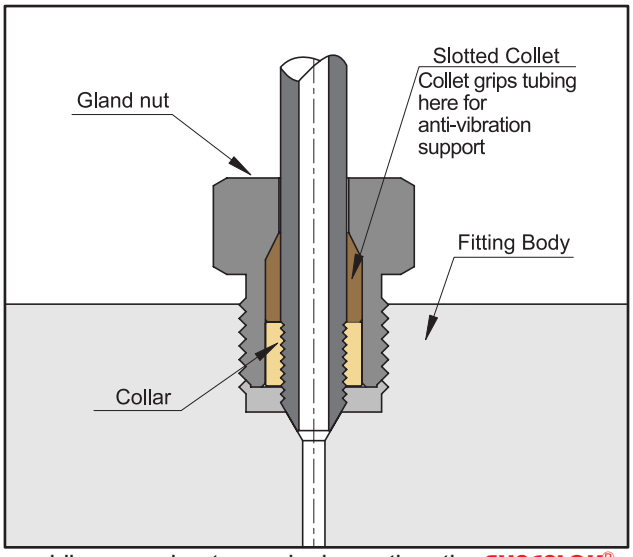

For extreme conditions of vibration and(or) shock in tubing system, such as locating fitting on an unsupported line near a compressor, SUPERLOK coned and threaded connections are offered with the anti-vibration collet gland assemblies. Completely interchangeable with standard SUPERLOK high pressure connections, the collet gland assemblies provide equally effective pressure handling capability.

In standard connection systems, the bending stresses on the threaded area of the tubing imposed by excessive vibration or movement may cause premature fatigue failure of the tubing at the back of the thread. By moving the stress concentration back to the unthreaded part of the tubing and providing a wedge-type gripping action, the SUPERLOK® anti-vibration collet galnd assembly strengthens the entire structure. With stress concentration reduced and overall stress level maintained well below the endurance limit of the material, the result is virtually umlimited vibrational fatigue life.

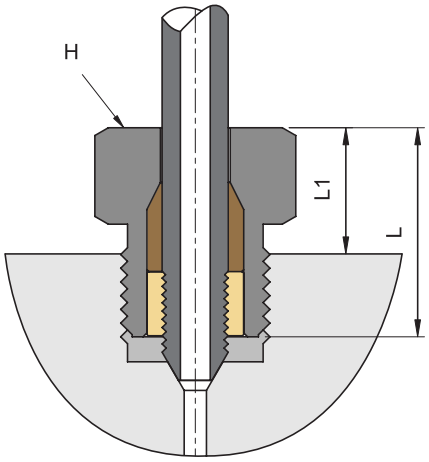

Part No.	Tube Size (in)	Hex H (in)	L1	L
SHP- AVCG- 4H	1/4″	5/8″	12.7	20.6
SHP- AVCG- 6H	3/8″	7/8″	15.8	28.5
SHP- AVCG- 9H	9/16″	1 - 3/16″	25.4	30.2

• All dimensions in millimeters unless specified as “inch”. Dimension are for reference only, subject to change.

Anti - Vibration Collet Gland - Pressure to 43,000psi (size to 1″)

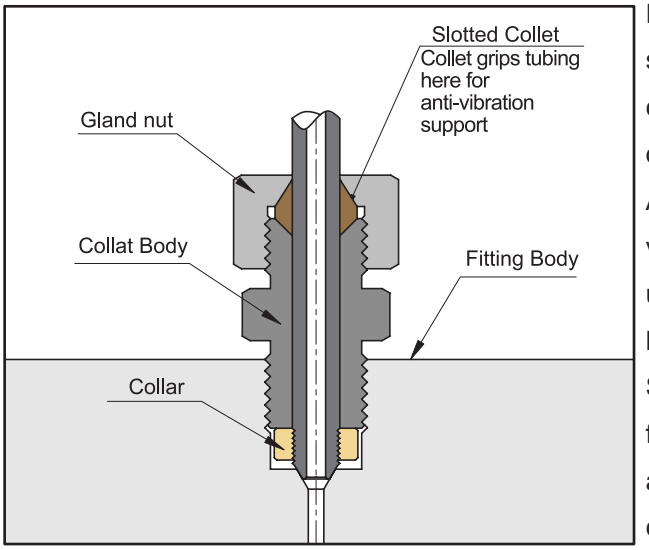

For extreme conditions of vibration and(or) shock in tubing system, such as locating fitting on an unsupported line near a compressor, SUPERLOK® coned and threaded connections are offered with the anti-vibration collet gland assemblies.

A less complex and more economical design than other vibration-resistant connections, the collet gland assembly utilizes the same coned and threaded features of SUPERLOK high pressure connections.

Series SHP - AVCG -16 extend the gland nut to provide room for the tapered, slotted collet and collet nut. The design provies a slight difference in angles between the collet and the corresponding taper of the gland nut, As the nut is tightned, it acts to wedge the tapered end of the collet into a gripping engagement with the tubing.

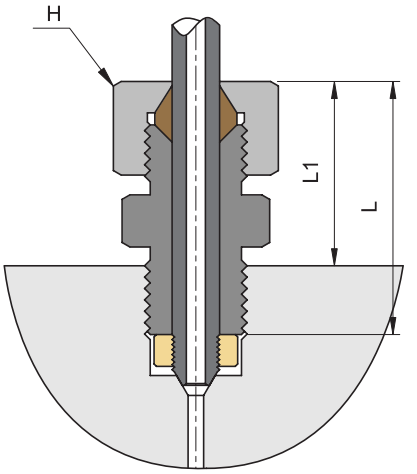

Part No.	Tube Size (in)	Hex H (in)	L1	L
SHP- AVCG- 16H	1″	1 - 1/2″	42.9	60.5

• All dimensions in millimeters unless specified as “inch”. Dimension are for reference only, subject to change.

Installation Instructions

Medium Pressure and High Pressure Coned and Threaded Tube Connections

1. Apply a process-compatible lubricant to the gland threads.

2. Slip the gland onto the tube, then thread the collar onto the tube end.

3. A small amount of process-compatible lubricant applied to the tube cone will facilitate sealing. Insert the tubing into the connection and tighten finger tight.

4. Tighten gland slightly with the wrench.

Step 1,2,3

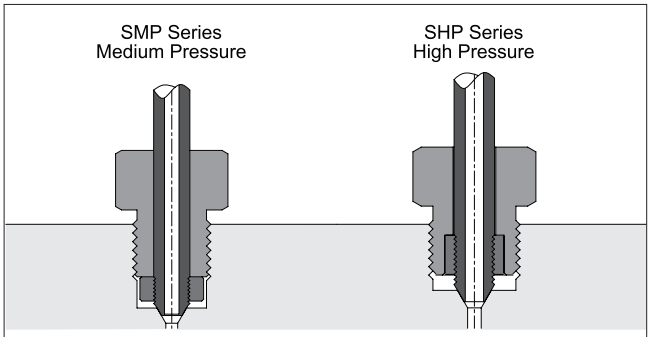

Step 4

Ordering Information

Example : **SMP G - 8H - SS**

1 2 3 4

1. Pressure of Fitting

SMP : Medium Pressure Fitting
SHP : High Pressure Fitting

2. Type of Fitting - Refer to catalogue Index

G : Gland
E : Elbow
UC : Union Coupling
CR : Collar
T : Tee C : Cross
BC : Bulkhead Coupling
P : Plug
SC : Straight Coupling
CP : Cap
N : Nipple

3. Size of Fitting (Tube O.D)

Fractional Tube	O.D (inch)	1/4	3/8	9/16	3/4	1
	Designation	4H	6H	9H	12H	16H

4. Material

SS : A479 TP316

High Pressure Fittings

SUPERLOK®

Instrumentation Thread Fittings

www.superlok.com

INDEX

Ordering Information

Example : I HN - 8N - 8R - B

1 2 3 4 3 4 5

1. Instrumentation Thread Fittings
2. Fitting Type
3. Pipe Thread Size
4. Pipe Thread Type
5. Material

Material Standards & Temperature Rating

Material	Identify	Max. Temperature°F(℃)
316 Stainless Steel	Nil	1000(537)
Brass	B	400(204)
Carbon Steel	C	375(190)

Thread Specifications

Thread Type	Identify	Specification
NPT	N	ASME B1.20.1, SAE AS71051
ISO/BSP (Parallel)	G	ISO 228/1, JIS B 0202
ISO/BSP (Tapered)	R	ISO 7/1, JIS B 0203

Pipe Thread Size

Size (inch)	1/8	1/4	3/8	1/2	3/4	1
ISO Tapered	2R	4R	6R	8R	12R	16R
NPT	2N	4N	6N	8N	12N	16N
ISO Parallel	2G	4G	6G	8G	12G	16G

Gasket, O-Ring Materials

Component	Material	Temperature range °F(℃)
O-ring	Buna N	-25℃ to 110℃ (-13°F to 230°F)
	Fluorocarbon	-28℃ to 204℃ (-20°F to 400°F)
Copper gasket	Copper	-196℃ to 204℃ (-325°F to 400°F)

Installation Instructions

To ensure a leak-tight seal, BMT recommends the use of a pipe thread sealant on all NPT, ISO Tapered threads. The most effective sealing method is teflon tape. Tape should be used only on male tapered pipe threads.

Do not use tape on flared, coned or tube fitting ends!

Clean both male and female tapered threads. Wrap tape in the direction of the male tapered thread spiral.

Pressure Ratings

Size Designator	NPT Size	316 Stainless Steel				Brass				Carbon Steel			
		Male		Female		Male		Female		Male		Female	
		psig	bar	psig	bar	psig	bar	psig	bar	psig	bar	psig	bar
1	1/16	11000	757	6700	461	5500	378	3300	227	11000	757	6700	461
2	1/8	10000	689	6500	447	5000	344	3200	220	10000	689	6500	447
4	1/4	8000	551	6600	454	4000	275	3300	227	8000	551	6600	454
6	3/8	7800	537	5300	365	3900	268	2600	179	7800	537	5300	365
8	1/2	7700	530	4900	337	3800	261	2400	165	7700	530	4900	337
12	3/4	7300	502	4600	316	3600	248	2300	158	7300	502	4600	316
16	1	5300	365	4400	303	2600	179	2200	151	5300	365	4400	303
20	1 1/4	6000	413	5000	344	3000	206	2500	172	6000	413	5000	344
24	1 1/2	5000	344	4600	316	2500	172	2300	158	5000	344	4600	316
32	2	3900	268	3900	268	1900	130	1900	130	3900	268	3900	268

- Pressure ratings are based on ASME Code for Pressure Piping B31.3, Process Piping with allowable stress 20,000psi for SS316, 10,000psi/Brass, and 20,000psi/ Carbon steel.
- To determine pressure ratings in accordance with B31.1, Power Piping:
  - 316 Stainless steel material : multiply by 0.94, Carbon steel material : multiply by 0.75, Brass material ratings remain the same
- To determine kPa, multiply by 6.89

ICN

Close Nipple

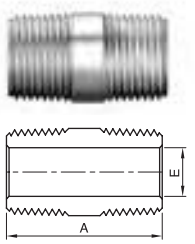

Male NPT Threads

Part Number	NPT Pipe Size	Dimension	
		A	E
ICN - 2N	1/8	19.1	4.8
ICN - 4N	1/4	28.4	7.1
ICN - 6N	3/8	28.4	9.6
ICN - 8N	1/2	38.1	11.9
ICN - 12N	3/4	38.1	15.7
ICN - 16N	1	47.8	22.4

※ ISO Tapered Threads are available upon request.

IHN

Hex Nipple

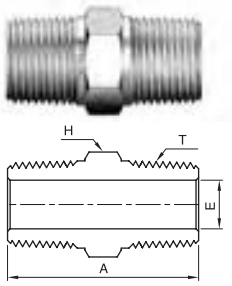

Male NPT Threads

Part Number	NPT Pipe Size	Dimension		
		A	E	H
IHN - 2N	1/8	25.6	4.8	11.1
IHN - 4N	1/4	35.6	7.1	14.2
IHN - 6N	3/8	36.3	9.6	17.4
IHN - 8N	1/2	46.7	11.9	22.2
IHN - 12N	3/4	46.7	15.7	26.9
IHN - 16N	1	58.9	22.4	34.9

※ ISO Tapered Threads are available upon request.

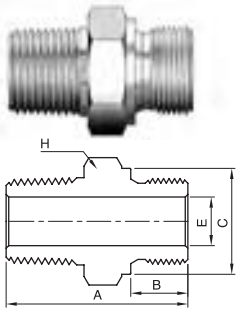

Male NPT to Male ISO Parallel Pipe Threads

Part Number	NPT Pipe Size	ISO/BSP Pipe Size (ISO 228)	Dimension				
			A	B	C	E	H
IHN - 2N - 2G	1/8	1/8	27.7	7.1	13.7	4.1	14.2
IHN - 4N - 4G	1/4	1/4	36.8	11.2	18.0	5.8	19.1
IHN - 6N - 6G	3/8	3/8	37.6	11.2	21.6	7.9	22.2
IHN - 8N - 8G	1/2	1/2	44.4	14.2	25.9	11.9	26.9
IHN - 12N - 12G	3/4	3/4	49.0	15.7	32.0	15.7	33.3
IHN - 16N - 16G	1	1	56.6	18.3	38.9	19.8	41.2

IHLN

Hex Long Nipple

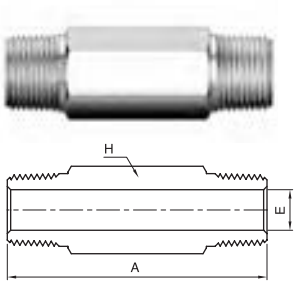

Male NPT Threads

Part Number	NPT Pipe Size	Dimension		
		A	E	H
IHLN - 2N	1/8	*	4.8	11.1
IHLN - 4N	1/4	*	7.1	14.2
IHLN - 6N	3/8	*	9.6	17.4
IHLN - 8N	1/2	*	11.9	22.2
IHLN - 12N	3/4	*	15.7	26.9
IHLN - 16N	1	*	22.4	34.9

※ **NOTE :** The length of Nipple "A" is defined by user
Part Number Example : IHLN - 8N - 100L(length "A" : 100mm)

※ ISO Tapered Threads are available upon request.

• All dimensions in millimeters unless specified as "inch". Dimension are for reference only, subject to change.

IHRN

Hex Reducing Nipple

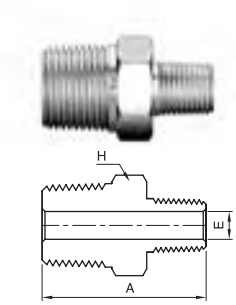

Male NPT Threads

Part Number	NPT Pipe Size	Reduced Pipe Size	Dimension		
			A	E	H
IHRN - 2N - 1N	1/8	1/16	25.6	3.0	11.1
IHRN - 4N - 2N	1/4	1/8	31.0	4.8	14.2
IHRN - 6N - 2N	3/8	1/8	31.8	4.8	17.4
IHRN - 6N - 4N	3/8	1/4	36.3	7.1	17.4
IHRN - 8N - 2N	1/2	1/8	37.3	4.8	22.2
IHRN - 8N - 4N	1/2	1/4	41.9	7.1	22.2
IHRN - 8N - 6N	1/2	3/8	41.9	9.6	22.2
IHRN-12N - 4N	3/4	1/4	41.9	7.1	26.9
IHRN-12N - 8N	3/4	1/2	46.7	11.9	26.9
IHRN-16N - 4N	1	1/4	49.3	7.1	34.9
IHRN-16N - 8N	1	1/2	54.1	11.9	34.9
IHRN-16N -12N	1	3/4	54.1	15.7	34.9

※ ISO Tapered Threads are available upon request.

IA

Adapter

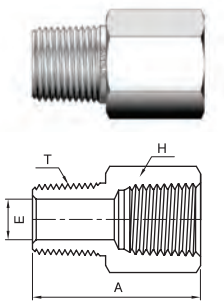

Male to Female NPT Threads

Part Number	NPT Pipe Size	Dimension		
		A	E	H
IA - 2N	1/8	27.9	4.8	14.2
IA - 4N	1/4	35.6	7.1	19.1
IA - 6N	3/8	38.4	9.6	22.2
IA - 8N	1/2	49.3	11.9	26.9
IA - 12N	3/4	51.3	15.7	33.3
IA - 16N	1	57.9	22.4	41.2

※ ISO Tapered Threads are available upon request.

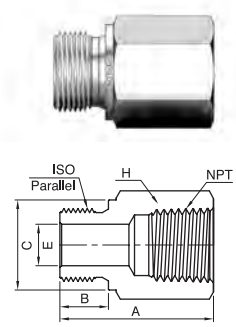

Male ISO Parallel Pipe Threads to Female NPT

Part Number	ISO/BSP Pipe Size (ISO 228)	NPT Pipe Size	Dimension				
			A	B	C	E	H
IA - 2G - 2N	1/8	1/8	25.1	7.1	13.7	4.1	14.2
IA - 4G - 4N	1/4	1/4	33.5	11.2	18.0	5.8	19.1
IA - 6G - 6N	3/8	3/8	35.8	11.2	21.6	7.9	22.2
IA - 8G - 8N	1/2	1/2	44.2	14.2	25.9	11.9	26.9
IA - 12G - 12N	3/4	3/4	48.0	15.7	32.0	15.7	33.3
IA - 16G - 16N	1	1	53.3	18.3	38.9	19.8	41.2

• All dimensions in millimeters unless specified as “inch”. Dimension are for reference only, subject to change.

IRA

Reducing Adapter

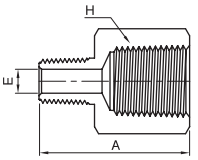

Male to Female NPT Threads

Part Number	Male Pipe Size	Female Pipe Size	Dimension		
			A	E	H
IRA - 2N - 4N	1/8	1/4	32.0	4.8	19.1
IRA - 2N - 6N	1/8	3/8	33.8	4.8	22.2
IRA - 4N - 6N	1/4	3/8	38.1	7.1	22.2
IRA - 2N - 8N	1/8	1/2	40.1	4.8	26.9
IRA - 4N - 8N	1/4	1/2	44.7	7.1	26.9
IRA - 6N - 8N	3/8	1/2	44.4	9.6	26.9
IRA - 4N -12N	1/4	3/4	47.0	7.1	33.3
IRA - 6N -12N	3/8	3/4	46.2	9.6	33.3
IRA - 8N -12N	1/2	3/4	51.3	11.9	33.3
IRA - 4N -16N	1/4	1	49.8	7.1	41.2
IRA - 8N -16N	1/2	1	54.9	11.9	41.2
IRA-12N -16N	3/4	1	55.1	15.7	41.2

※ ISO Tapered Threads are available upon request.

IRHB

Reducing Hex Bushing

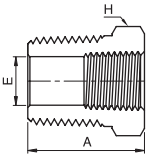

Male to Female NPT Threads

Part Number	Male Pipe Size	Female Pipe Size	Dimension		
			A	E	H
IRHB - 4N - 2N	1/4	1/8	26.9	7.1	14.2
IRHB - 6N - 2N	3/8	1/8	21.8	8.6	17.4
IRHB - 6N - 4N	3/8	1/4	30.2	9.6	19.1
IRHB - 8N - 2N	1/2	1/8	27.4	8.6	22.2
IRHB - 8N - 4N	1/2	1/4	27.4	11.4	22.2
IRHB - 8N - 6N	1/2	3/8	35.8	11.9	22.2
IRHB-12N - 4N	3/4	1/4	27.4	11.4	26.9
IRHB-12N - 6N	3/4	3/8	27.4	15.0	26.9
IRHB-12N - 8N	3/4	1/2	41.4	15.7	26.9
IRHB-16N - 4N	1	1/4	34.8	11.4	34.9
IRHB-16N - 6N	1	3/8	34.8	15.0	34.9
IRHB-16N - 8N	1	1/2	34.8	18.5	34.9
IRHB-16N -12N	1	3/4	47.0	22.4	34.9

※ ISO Tapered Threads are available upon request.

IHC

Hex Coupling

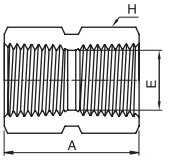

Female NPT Threads

Part Number	Pipe Size	Dimension		
		A	E	H
IHC - 2N	1/8	20.6	8.6	14.2
IHC - 4N	1/4	30.2	11.4	19.1
IHC - 6N	3/8	33.3	15.0	22.2
IHC - 8N	1/2	39.6	18.5	26.9
IHC - 12N	3/4	41.1	23.9	33.3
IHC - 16N	1	50.8	29.7	41.2

※ ISO Tapered Threads are available upon request.

IHRC

Hex Reducing Coupling

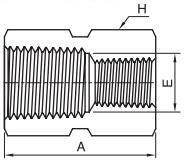

Female NPT Threads

Part Number	Pipe Size	Reduced Pipe Size	Dimension		
			A	E	H
IHRC - 4N - 2N	1/4	1/8	31.0	8.6	19.1
IHRC - 6N - 4N	3/8	1/4	35.1	11.4	22.2
IHRC - 8N - 2N	1/2	1/8	39.6	8.6	26.9
IHRC - 8N - 4N	1/2	1/4	44.4	11.4	26.9
IHRC - 8N - 6N	1/2	3/8	45.2	15.0	26.9
IHRC-12N - 4N	3/4	1/4	46.0	11.4	33.3
IHRC-12N - 8N	3/4	1/2	52.3	18.5	33.3
IHRC-16N - 8N	1	1/2	55.6	18.5	41.2
IHRC-16N -12N	1	3/4	57.2	23.9	41.2

※ ISO Tapered Threads are available upon request.

• All dimensions in millimeters unless specified as “inch”. Dimension are for reference only, subject to change.

IPG

ISO Parallel Gasket

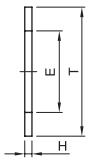

ISO Parallel Copper Gaskets

Part Number	Pipe Size	Dimension		
		E	H	T
IPG - 2	1/8	10.2	2.0	16.0
IPG - 4	1/4	13.4	2.0	19.5
IPG - 6	3/8	17.0	2.0	24.0
IPG - 8	1/2	21.2	2.0	29.0
IPG - 12	3/4	27.2	2.0	34.5
IPG - 16	1	34.0	2.0	42.0

IPP

Pipe Plug

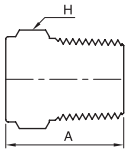

Male NPT Threads

Part Number	Pipe Size	Dimension	
		A	H
IPP - 2N	1/8	19.1	11.1
IPP - 4N	1/4	24.4	14.2
IPP - 6N	3/8	25.1	17.4
IPP - 8N	1/2	30.7	22.2
IPP - 12N	3/4	30.7	26.9
IPP - 16N	1	38.1	34.9

※ ISO Tapered Threads are available upon request.

IPC

Pipe Cap

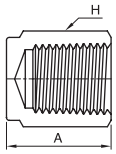

Female NPT Threads

Part Number	Pipe Size	Dimension	
		A	H
IPC - 2N	1/8	19.1	14.2
IPC - 4N	1/4	23.1	19.1
IPC - 6N	3/8	26.2	22.2
IPC - 8N	1/2	34.0	26.9
IPC - 12N	3/4	36.6	33.3
IPC - 16N	1	41.1	41.2

※ ISO Tapered Threads are available upon request.

IFE

Female Elbow

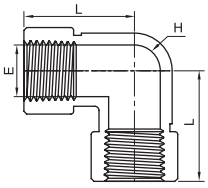

Female NPT Threads

Part Number	Pipe Size	Dimension		
		E	L	H
IFE - 2N	1/8	8.6	24.0	12.7
IFE - 4N	1/4	11.4	29.0	17.5
IFE - 6N	3/8	15.0	34.5	20.6
IFE - 8N	1/2	18.5	37.0	25.4
IFE - 12N	3/4	23.9	46.5	31.8
IFE - 16N	1	29.7	48.8	42.9

※ ISO Tapered Threads are available upon request.

• All dimensions in millimeters unless specified as “inch”. Dimension are for reference only, subject to change.

ISE
Street Elbow

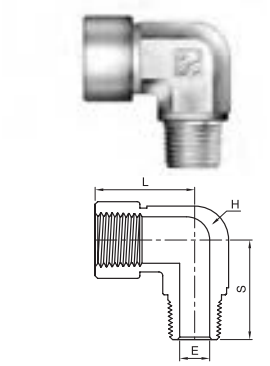

Female to Male NPT Threads

Part Number	Pipe Size	Dimension			
		E	L	S	H
ISE - 2N	1/8	4.8	24.1	19.6	12.7
ISE - 4N	1/4	7.1	29.0	26.5	17.5
ISE - 6N	3/8	9.6	34.5	28.2	20.6
ISE - 8N	1/2	11.9	37.0	35.3	25.4
ISE - 12N	3/4	15.7	46.5	39.6	31.8
ISE - 16N	1	22.4	48.8	49.2	42.9

※ ISO Tapered Threads are available upon request.

IRSE
Reducing Street Elbow

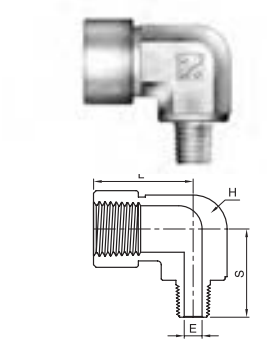

Female to Male NPT Threads

Part Number	Female Pipe Size	Male Pipe Size	Dimension			
			E	L	S	H
IRSE - 2N - 1N	1/8	1/16	3.0	26.4	22.1	12.7
IRSE - 4N - 2N	1/4	1/8	4.8	29.0	22.4	17.5
IRSE - 6N - 4N	3/8	1/4	7.1	34.5	28.2	20.6
IRSE - 8N - 4N	1/2	1/4	7.1	37.0	30.5	25.4
IRSE - 8N - 6N	1/2	3/8	9.6	37.0	30.5	25.4
IRSE -12N - 8N	3/4	1/2	11.9	46.5	39.6	31.8
IRSE -16N - 8N	1	1/2	11.9	48.8	46.5	42.9

※ ISO Tapered Threads are available upon request.

IME
Male Elbow

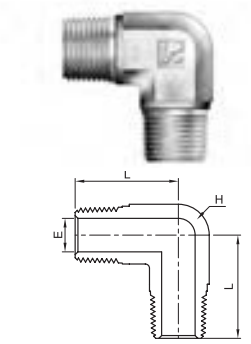

Male NPT Threads

Part Number	Pipe Size	Dimension		
		E	L	H
IME - 2N	1/8	4.8	19.1	12.7
IME - 4N	1/4	7.1	24.5	12.7
IME - 6N	3/8	9.6	26.9	17.5
IME - 8N	1/2	11.9	33.2	20.6
IME - 12N	3/4	15.7	35.3	25.4
IME - 16N	1	22.4	44.5	31.8

※ ISO Tapered Threads are available upon request.

IFT
Female Tee

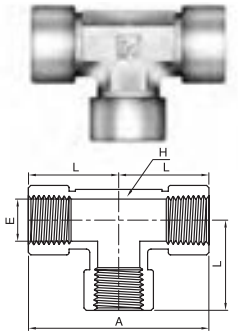

Female NPT Threads

Part Number	Pipe Size	Dimension			
		A	E	L	H
IFT - 2N	1/8	48.0	8.6	24.0	12.7
IFT - 4N	1/4	58.0	11.4	29.0	17.5
IFT - 6N	3/8	69.0	15.0	34.5	20.6
IFT - 8N	1/2	74.0	18.5	37.0	25.4
IFT - 12N	3/4	93.0	23.9	46.5	31.8
IFT - 16N	1	97.0	29.7	48.5	42.9

※ ISO Tapered Threads are available upon request.

• All dimensions in millimeters unless specified as “inch”. Dimension are for reference only, subject to change.

IBT
Branch Tee

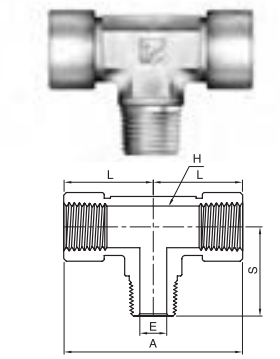

Male and Female NPT Threads

Part Number	Pipe Size	Dimension				
		A	E	L	S	H
IBT - 2N	1/8	48.0	4.8	24.0	19.6	12.7
IBT - 4N	1/4	58.0	7.1	29.0	26.5	17.5
IBT - 6N	3/8	69.0	9.6	34.5	28.2	20.6
IBT - 8N	1/2	74.0	11.9	37.0	35.3	25.4
IBT - 12N	3/4	93.0	15.7	46.5	39.6	31.8
IBT - 16N	1	97.0	22.4	48.5	49.2	42.9

※ ISO Tapered Threads are available upon request.

IRT
Run Tee

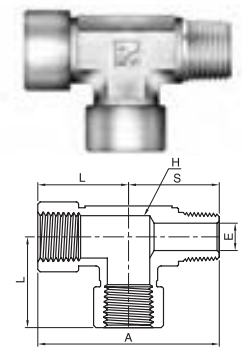

Male and Female NPT Threads

Part Number	Pipe Size	Dimension				
		A	E	L	S	H
IRT - 2N	1/8	43.6	4.8	24.0	19.6	12.7
IRT - 4N	1/4	56.2	7.1	29.0	26.5	17.5
IRT - 6N	3/8	62.7	9.6	34.5	28.2	20.6
IRT - 8N	1/2	72.3	11.9	37.0	35.3	25.4
IRT - 12N	3/4	86.1	15.7	46.5	39.6	31.8
IRT - 16N	1	97.7	22.4	48.5	49.2	42.9

※ ISO Tapered Threads are available upon request.

IMT
Male Tee

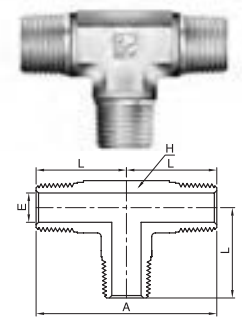

Male NPT Threads

Part Number	Pipe Size	Dimension			
		A	E	L	H
IMT - 2N	1/8	38.2	4.8	19.1	12.7
IMT - 4N	1/4	49.0	7.1	24.5	12.7
IMT - 6N	3/8	53.8	9.6	26.9	17.5
IMT - 8N	1/2	66.4	11.9	33.2	20.6
IMT - 12N	3/4	70.6	15.7	35.3	25.4
IMT - 16N	1	89.0	22.4	44.5	31.8

※ ISO Tapered Threads are available upon request.

IFC
Female Cross

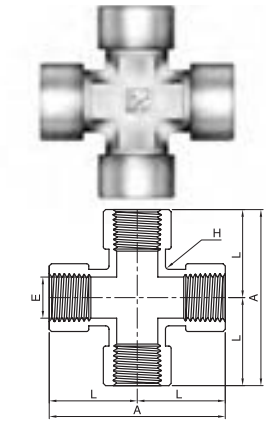

Female NPT Threads

Part Number	Pipe Size	Dimension			
		A	E	L	H
IFC - 2N	1/8	48.0	8.6	24.0	12.7
IFC - 4N	1/4	58.0	11.4	29.0	17.5
IFC - 6N	3/8	69.0	15.0	34.5	20.6
IFC - 8N	1/2	74.0	18.5	37.0	25.4
IFC - 12N	3/4	93.0	23.9	46.5	31.8
IFC - 16N	1	97.0	29.7	48.5	42.9

※ ISO Tapered Threads are available upon request.

• All dimensions in millimeters unless specified as “inch”. Dimension are for reference only, subject to change.

Instrumentation Thread Fittings

www.sks-online.com

SUPERLOK®

Push-On Hose Fittings

www.superlok.com

Push-On Hose Assembly

1. Cut a clean, square edge on end of hose

2. Cover first barb of end connention with hose. (Lubrication fitting stem with light oil may ease assembly)

3. Hold end connection against flat surface, Grip hose and push with a steady force until hose seats into blue finishing.

Push-On Hose Disassembly

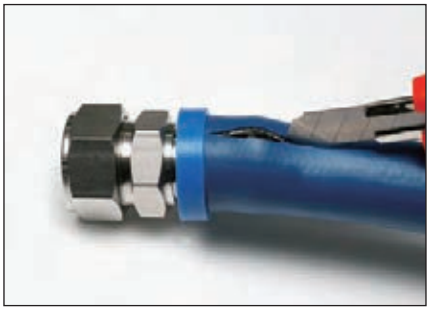

1. Slit hose lengthwise from blue finishing cap to end of barb. Do not damage barbs.

2. Bend hose to expose barbs, then remove hose with a quick pull.

Ordering Information

Example : **SPH - 4 - 4S - SS**

1 2 3 4

1. Push-On Hose Fitting Seires

2. Hose ID

Hose	1/4″	3/8″	1/2″	3/4″
Identify	4	6	8	12

3. End Connection

Fractional Tube	Connection Size	1/4″	3/8″	1/2″	3/4″
	Identifity	4S	6S	8S	12S
Tube Adapter	Connection Size	1/4″	3/8″	1/2″	3/4″
	Identifity	4T	6T	8T	12T

Hose	1/4″	3/8″	1/2″	3/4″
Identify	4N(R)	6N(R)	8N(R)	12N(R)

4. Material Designator

- SS : 316 Stainless steel
- B : BRASS

SUPERLOK Tube Fittings

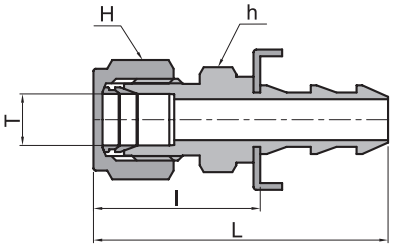

Part Number	Nominal Hose Size(Inch)	Tube O.D T (Inch)	Dimension			
			Hex		I	L
			H(Inch)	h(Inch)		
SPH-4-4S	1/4	1/4	9/16	9/16	27.0	46.5
SPH-6-6S	3/8	3/8	11/16	9/16	29.8	52.3
SPH-8-8S	1/2	1/2	7/8	13/16	33.5	60.7

Tube Adapters

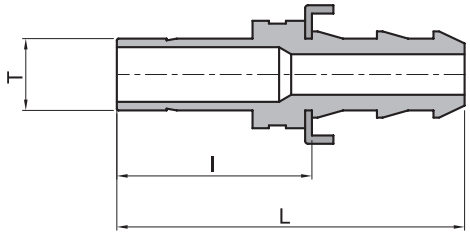

Part Number	Nominal Hose Size(Inch)	Tube O.D T (Inch)	Dimension	
			I	L
SPH-4-4T	1/4	1/4	29.4	48.9
SPH-6-6T	3/8	3/8	29.5	52.0
SPH-8-8T	1/2	1/2	34.3	61.5
SPH-12-12T	3/4	3/4	38.6	80.6

Male Pipe Thread

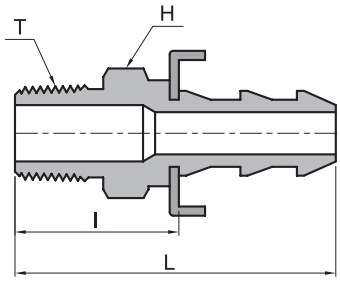

Part Number	Nominal Hose Size(Inch)	T Thread (NPT)	HEX H(Inch)	Dimension	
				I	L
SPH-4-4N	1/4	1/4	9/16	23.2	42.7
SPH-6-4N	3/8	1/4	11/16	24.6	47.1
SPH-6-6N	3/8	3/8	11/16	24.6	47.1
SPH-8-8N	1/2	1/2	7/8	31.2	58.4
SPH-12-12N	3/4	3/4	1 1/16	33.9	75.9

Hose Straight Union

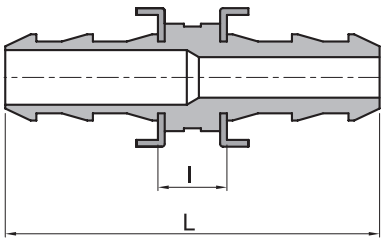

Part Number	Nominal Hose Size(Inch)	Dimension	
		I	L
SPH-4	1/4	13.6	52.6
SPH-6	3/8	12.0	57.0
SPH-8	1/2	15.0	69.4
SPH-12	3/4	16.6	100.6

• All dimensions in millimeters unless specified as “inch”. Dimension are for reference only, subject to change.

SUPERLOK®

Ultra High Purity Fittings

www.superlok.com

INDEX

Welding and Metal Face Seal Fittings

Ordering Information

Example : C 6 E - 4 - P - 36L

C	6	E	4	P	36L
1	2	3	4	5	6

1. Clean Fittings
2. Tube Length
3. Product
4. Size
5. Surface Level
6. Material

Size

O.D (Inch)	1/8	1/4	3/8	1/2	3/4	1
Identify	2	4	6	8	12	16

Tube Length

Length (mm)	6.35	10.00	19.05
Identify	6	10	19

Inner Surface Level

	BA	EP
Identify	Blank	P

Material

	316L Stainless Steel	Single Melting 316L Stainless Steel	Double Melting 316L Stainless Steel
Identify	Blank or 36L	SM	DM

Product

Identify	Product	Identify	Product	Identify	Product
R	Reducer	CR	Cross	T	Tee
RE	Reducing Elbow	E	Elbow	RT	Reducing Tee
UC	Union Cross	HE	45° Elbow	FG	Female Gland
MG	Male Gland	TB	Tribow	RSLG	Reducing Socket Weld Gland
SSG	Socket Weld Short Gland	SLG	Socket Weld Long Gland	TA	Tube Adapter
BG	Blind Gland	MWG	Male Weld Gland	BHU	Bulkhead Union
MU	Double Male Union	MRU	Double Male Reducing Union	CG	Coupling
TC	TBW Connector	TBHC	TBW Bulkhead Connector	RB	Reducing Bushing
FRU	Double Female Reducing Union	RA	Reducing Adapter	UT	Union Tee
ME	Male Elbow	UE	Union Elbow	MC	Male Connector
SC	SUPERLOK Tube Fitting Connector	BHSC	SUPERLOK Tube Fitting Bulkhead Connector	GT	Gasket
FC	Female Connector	GR	Gasket Retainer Assembly	MN	Male Nut
BG	Blind Gasket	FN	Female Nut	PGC	Plug (Cable Type)
PG	Plug	CP	Cap	HLG	High Flow Long Gland
HFN	High Flow Female Nut	HMN	High Flow Male Nut	HBHC	High Flow TBW Bulkhead Connector
HTC	High Flow TBW Connector	WFC	Welded Female Connector	WSC	Welded Lok Connector
WMC	Welded Male Connector	BHMC	Bulkhead Male Connector	WFU	Welded Female Union

Technical Information

Pressure Rating

Pressure ratings are calculated in accordance with ASME B31.3 and ASME B31.1 for 316 stainless steel.
All working pressure are rated at ambient temperature and are based on a 4:1 safety factor.

Tube O.D (in)	Wall Thickness (in)	Pressure Rating	
		PSIG	BAR
1/8	0.028 (0.71mm)	8550	590
1/4	0.035 (0.89mm)	5100	351
3/8	0.035 (0.89mm)	3300	227
1/2	0.049 (1.24mm)	3700	254

3/4 & 1 inch sizes are not standard, but can be manufactured on request.

Internal Surface Finishes

Grade	Designator	Surface finish (Ry)	Surface finish (Ra)
BA	Blank	3.0㎛	10uin
EP	P	0.7㎛	5uin

Cleaning & Packing

All **SUPERLOK** Clean fittings are Ultra-High Purity cleaning and double packaged in the clean room.
Sealing part is protected with a plastic cap

Material & Temperature Rating

Type	Material	Designator	Temperature °F(°C)
FITTING	316L STAINLESS STEEL	36L	1000 (537)
	316L STAINLESS STEEL (SINGLE MELT)	SM	
	316L STAINLESS STEEL (DOUBLE MELT)	DM	
GASKET	316L STAINLESS STEEL	36L	1000 (537)
	NICKEL	NI	600 (315)

Weld Fittings

FEATURE

- Micro weld fitting is suitable for the miniature tubing system and allows close component spacing.
- Micro weld fitting provides the same flow and service rating as larger size weld fitting.
- Tube butt weld fitting has two types of welding, TBW (Tube butt weld) and ATW (Automatic tube butt weld).
- Tube ends are machined with a square face and corners to enhance alignment and maintain tube wall uniformity.

Radius junction means smooth flow transitions and elimination of pockets and entrapment zones.

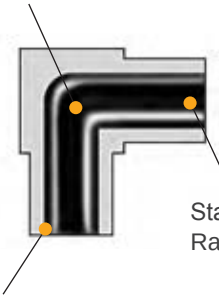

Standard surface finish is average Ra 0.25㎛ (Ra 10㎲in)

Square, sharp, burr-free tube weld end.

Laser etch Marking Heat Code Traceability
SUPERLOK Clean fittings are marked as standard with Manufacturer, Material, Surface Finish, Heat Code No, designation.

Micro Weld Fittings

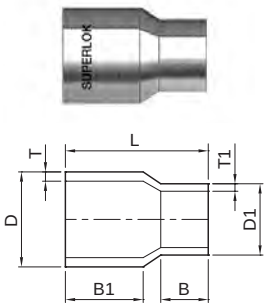

Micro Reducer

Part No.	Tube OD (D)		Tube OD (D1)		T	T1	B	B1	L
	Size(in)	Size	Size(in)	Size					
C6R-4-2	1/4″	6.35	1/8″	3.18	1.00	0.70	6.35	10.40	19.1
C6R-6-4	3/8″	9.53	1/4″	6.35	1.00	1.00	6.35	10.40	19.1
C6R-8-4	1/2″	12.70	1/4″	6.35	1.24	1.00	6.35	10.40	19.1
C6R-8-6	1/2″	12.70	3/8″	9.53	1.24	1.00	6.35	10.40	19.1
C6R-12-4	3/4″	19.05	1/4″	6.35	1.65	1.00	6.35	10.40	19.1
C6R-12-6	3/4″	19.05	3/8″	9.53	1.65	1.00	6.35	10.40	19.1
C6R-12-8	3/4″	19.05	1/2″	12.70	1.65	1.24	6.35	10.40	19.1

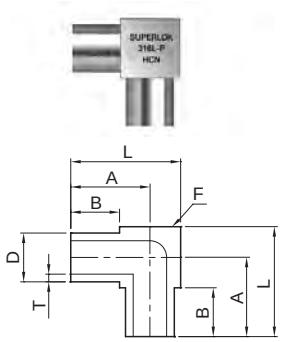

Micro 90° Elbow

Part No.	Tube OD (D)		T	A	B	F Body	L
	Size(in)	Size					
C6E-2	1/8″	3.18	0.70	10.32	6.35	7.94	14.29
C6E-4	1/4″	6.35	1.00	10.32	6.35	7.94	14.29
C6E-6	3/8″	9.53	1.00	11.91	6.35	11.11	17.46
C6E-8	1/2″	12.70	1.24	13.50	6.35	14.29	20.64
C6E-12	3/4″	19.05	1.65	16.68	6.35	20.65	27.00

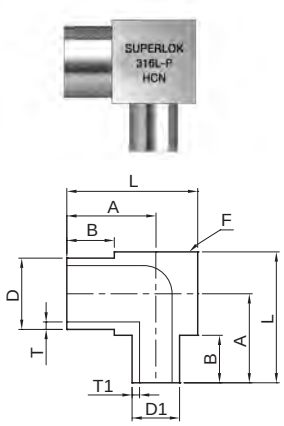

Micro Reducing 90° Elbow

Part No.	Tube OD (D)		Tube OD (D1)		T	T1	A	B	F Body	L
	Size(in)	Size	Size(in)	Size						
C6RE-4-2	1/4″	6.35	1/8″	3.18	1.00	0.70	10.32	6.35	7.94	14.29
C6RE-6-4	3/8″	9.53	1/4″	6.35	1.00	1.00	11.91	6.35	11.11	17.46
C6RE-8-4	1/2″	12.70	1/4″	6.35	1.24	1.00	13.50	6.35	14.29	20.64
C6RE-8-6	1/2″	12.70	3/8″	9.53	1.24	1.00	13.50	6.35	14.29	20.64
C6RE-12-4	3/4″	19.05	1/4″	6.35	1.65	1.00	16.68	6.35	20.65	27.00
C6RE-12-6	3/4″	19.05	3/8″	9.53	1.65	1.00	16.68	6.35	20.65	27.00
C6RE-12-8	3/4″	19.05	1/2″	12.70	1.65	1.24	16.68	6.35	20.65	27.00

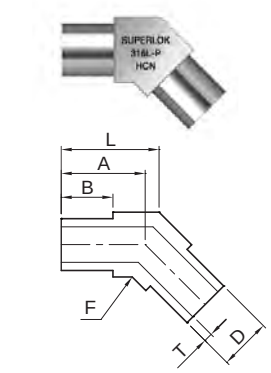

Micro 45° Elbow

Part No.	Tube OD (D)		T	A	B	F Body	L
	Size(in)	Size					
C6HE-2	1/8″	3.18	0.70	10.32	6.35	7.94	11.96
C6HE-4	1/4″	6.35	1.00	10.32	6.35	7.94	11.96
C6HE-6	3/8″	9.53	1.00	11.91	6.35	11.11	14.21
C6HE-8	1/2″	12.70	1.24	13.50	6.35	14.29	16.46
C6HE-12	3/4″	19.05	1.65	16.68	6.35	20.65	20.95

• All dimensions in millimeters unless specified as “inch”. Dimension are for reference only, subject to change.

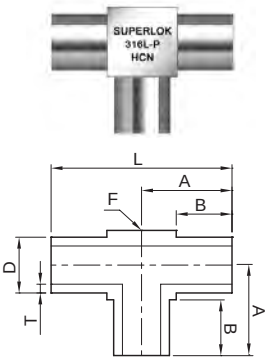

Micro Tee

Part No.	Tube OD (D)		T	A	B	F Body	L
	Size(in)	Size					
C6T-2	1/8″	3.18	0.70	10.32	6.35	7.94	20.64
C6T-4	1/4″	6.35	1.00	10.32	6.35	7.94	20.64
C6T-6	3/8″	9.53	1.00	11.91	6.35	11.11	23.81
C6T-8	1/2″	12.70	1.24	13.50	6.35	14.29	26.99
C6T-12	3/4″	19.05	1.65	16.68	6.35	20.65	33.35

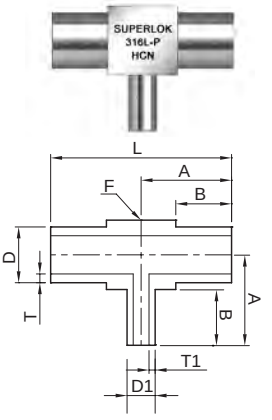

Micro Reducing Tee

Part No.	Tube OD (D)		Tube OD (D1)		T	T1	A	B	F Body	L
	Size(in)	Size	Size(in)	Size						
C6RT-4-2	1/4″	6.35	1/8″	3.18	1.00	0.70	10.32	6.35	7.94	20.64
C6RT-6-4	3/8″	9.53	1/4″	6.35	1.00	1.00	11.91	6.35	11.11	23.81
C6RT-8-4	1/2″	12.70	1/4″	6.35	1.24	1.00	13.50	6.35	14.29	26.99
C6RT-8-6	1/2″	12.70	3/8″	9.53	1.24	1.00	13.50	6.35	14.29	26.99
C6RT-12-4	3/4″	19.05	1/4″	6.35	1.65	1.00	16.68	6.35	20.65	27.00
C6RT-12-6	3/4″	19.05	3/8″	9.53	1.65	1.00	16.68	6.35	20.65	27.00
C6RT-12-8	3/4″	19.05	1/2″	12.70	1.65	1.24	16.68	6.35	20.65	27.00

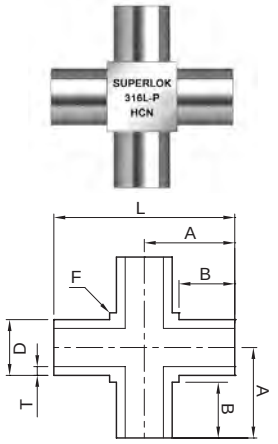

Micro Cross

Part No.	Tube OD (D)		T	A	B	F Body	L
	Size(in)	Size					
C6CR-2	1/8″	3.18	0.70	10.32	6.35	7.94	20.64
C6CR-4	1/4″	6.35	1.00	10.32	6.35	7.94	20.64
C6CR-6	3/8″	9.53	1.00	11.91	6.35	11.11	23.81
C6CR-8	1/2″	12.70	1.24	13.50	6.35	14.29	26.99
C6CR-12	3/4″	19.05	1.65	16.68	6.35	20.65	33.35

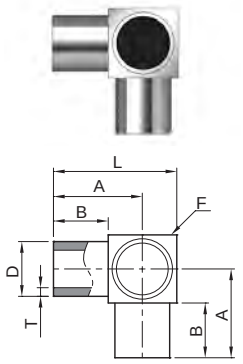

Micro Tribow

Part No.	Tube OD (D)		T	A	B	F Body	L
	Size(in)	Size					
C6TB-2	1/8″	3.18	0.70	10.32	6.35	7.94	14.29
C6TB-4	1/4″	6.35	1.00	10.32	6.35	7.94	14.29
C6TB-6	3/8″	9.53	1.00	11.91	6.35	11.11	17.46
C6TB-8	1/2″	12.70	1.24	13.50	6.35	14.29	20.64
C6TB-12	3/4″	19.05	1.65	16.68	6.35	20.65	27.00

• All dimensions in millimeters unless specified as “inch”. Dimension are for reference only, subject to change.

Forged Weld Fittings

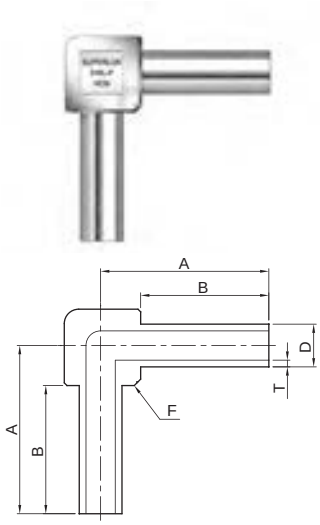

90° Elbow

Part No.	Tube OD (D)		T	A	B	F Body
	Size(in)	Size				
C19E-4	1/4″	6.35	1.00	25.00	19.05	11.2
C19E-6	3/8″	9.53	1.00	25.00	19.05	12.4
C19E-8	1/2″	12.70	1.24	29.00	19.05	17.5
C19E-12	3/4″	19.05	1.65	31.50	19.05	25.0
C19E-16	1″	25.40	1.65	34.00	19.05	29.9
C10E-4	1/4″	6.35	1.00	15.90	10.00	11.2
C10E-6	3/8″	9.53	1.00	15.90	10.00	12.4
C10E-8	1/2″	12.70	1.24	19.90	10.00	17.5
C10E-12	3/4″	19.05	1.65	22.40	10.00	25.0
C10E-16	1″	25.40	1.65	24.95	10.00	29.9

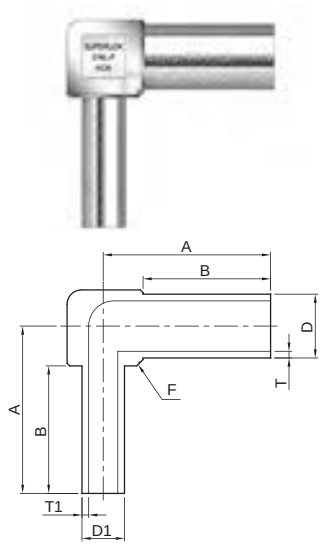

Reducing 90° Elbow

Part No.	Tube OD (D)		Tube OD (D1)		T	T1	A	B	F Body
	Size(in)	Size	Size(in)	Size					
C19RE-6-4	3/8″	9.53	1/4″	6.35	1.00	1.00	25.00	19.05	12.4
C19RE-8-4	1/2″	12.70	1/4″	6.35	1.24	1.00	29.00	19.05	17.5
C19RE-8-6	1/2″	12.70	3/8″	9.53	1.24	1.00	29.00	19.05	17.5
C19RE-12-4	3/4″	19.05	1/4″	6.35	1.65	1.00	31.50	19.05	25.0
C19RE-12-6	3/4″	19.05	3/8″	9.53	1.65	1.00	31.50	19.05	25.0
C19RE-12-8	3/4″	19.05	1/2″	12.70	1.65	1.24	31.50	19.05	25.0
C19RE-16-4	1″	25.40	1/4″	6.35	1.65	1.00	34.00	19.05	29.9
C19RE-16-8	1″	25.40	1/2″	12.70	1.65	1.24	34.00	19.05	29.9
C19RE-16-12	1″	25.40	3/4″	19.05	1.65	1.65	34.00	19.05	29.9

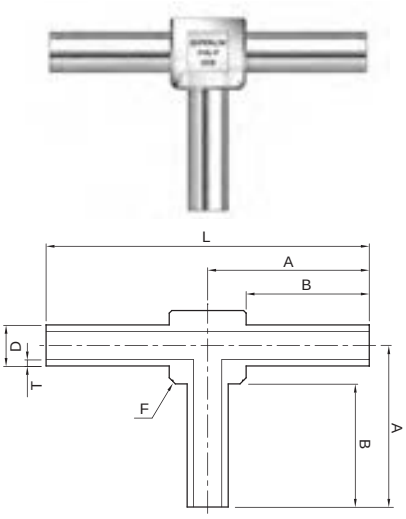

Tee

Part No.	Tube OD (D)		T	A	B	F Body	L
	Size(in)	Size					
C19T-4	1/4″	6.35	1.00	25.00	19.05	11.2	50.00
C19T-6	3/8″	9.53	1.00	25.00	19.05	12.4	50.00
C19T-8	1/2″	12.70	1.24	29.00	19.05	17.5	58.00
C19T-12	3/4″	19.05	1.65	31.50	19.05	25.0	63.00
C19T-16	1″	25.40	1.65	34.00	19.05	29.9	68.00
C10T-4	1/4″	6.35	1.00	15.90	10.00	11.2	31.80
C10T-6	3/8″	9.53	1.00	15.90	10.00	12.4	31.80
C10T-8	1/2″	12.70	1.24	19.90	10.00	17.5	39.80
C10T-12	3/4″	19.05	1.65	22.40	10.00	25.0	44.80
C10T-16	1″	25.40	1.65	24.95	10.00	29.9	49.90

• All dimensions in millimeters unless specified as “inch”. Dimension are for reference only, subject to change.

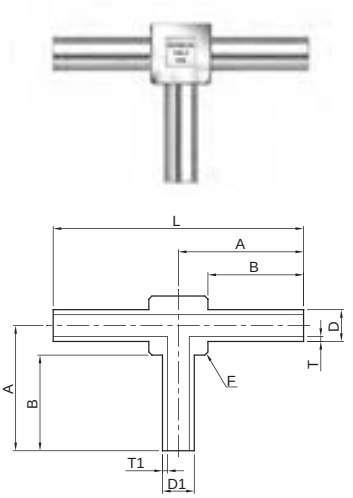

Reducing Tee

Part No.	Tube OD (D)		Tube OD (D1)		T	T1	A	B	F Body	L
	Size(in)	Size	Size(in)	Size						
C19RT-6-4	3/8″	9.53	1/4″	6.35	1.00	1.00	25.00	19.05	12.4	50.00
C19RT-8-4	1/2″	12.70	1/4″	6.35	1.24	1.00	29.00	19.05	17.5	58.00
C19RT-8-6	1/2″	12.70	3/8″	9.53	1.24	1.00	29.00	19.05	17.5	58.00
C19RT-12-4	3/4″	19.05	1/4″	6.35	1.65	1.00	31.50	19.05	25.0	63.00
C19RT-12-6	3/4″	19.05	3/8″	9.53	1.65	1.00	31.50	19.05	25.0	63.00
C19RT-12-8	3/4″	19.05	1/2″	12.70	1.65	1.24	31.50	19.05	25.0	63.00
C19RT-16-4	1″	25.40	1/4″	6.35	1.65	1.00	34.00	19.05	29.9	68.00
C19RT-16-8	1″	25.40	1/2″	12.70	1.65	1.24	34.00	19.05	29.9	68.00
C19RT-16-12	1″	25.40	3/4″	19.05	1.65	1.65	34.00	19.05	29.9	68.00
C10RT-6-4	3/8″	9.53	1/4″	6.35	1.00	1.00	15.90	10.00	12.4	31.80
C10RT-8-4	1/2″	12.70	1/4″	6.35	1.24	1.00	19.90	10.00	17.5	39.80
C10RT-8-6	1/2″	12.70	3/8″	9.53	1.24	1.00	19.90	10.00	17.5	39.80
C10RT-12-4	3/4″	19.05	1/4″	6.35	1.65	1.00	22.40	10.00	25.0	44.80
C10RT-12-6	3/4″	19.05	3/8″	9.53	1.65	1.00	22.40	10.00	25.0	44.80

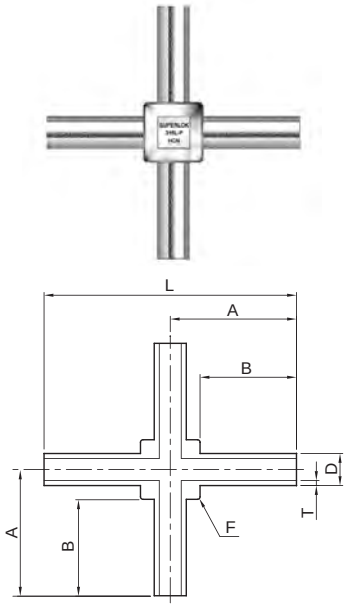

Cross

Part No.	Tube OD (D)		T	A	B	F Body	L
	Size(in)	Size					
C19CR-4	1/4″	6.35	1.00	25.00	19.05	11.2	50.00
C19CR-6	3/8″	9.53	1.00	25.00	19.05	12.4	50.00
C19CR-8	1/2″	12.70	1.24	29.00	19.05	17.5	58.00
C19CR-12	3/4″	19.05	1.65	31.50	19.05	25.0	63.00
C19CR-16	1″	25.40	1.65	34.00	19.05	29.9	68.00
C10CR-4	1/4″	6.35	1.00	15.90	10.00	11.2	31.80
C10CR-6	3/8″	9.53	1.00	15.90	10.00	12.4	31.80
C10CR-8	1/2″	12.70	1.24	19.90	10.00	17.5	39.80
C10CR-12	3/4″	19.05	1.65	22.40	10.00	25.0	44.80
C10CR-16	1″	25.40	1.65	24.95	10.00	29.9	49.90

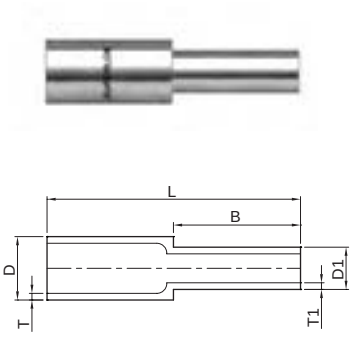

Reducer

Part No.	Tube OD (D)		Tube OD (D1)		T	T1	B	L
	Size(in)	Size	Size(in)	Size				
C19R-6-4	3/8″	9.53	1/4″	6.35	1.00	1.00	19.05	38.1
C19R-8-4	1/2″	12.70	1/4″	6.35	1.24	1.00	19.05	38.1
C19R-8-6	1/2″	12.70	3/8″	9.53	1.24	1.00	19.05	38.1
C19R-12-4	3/4″	19.05	1/4″	6.35	1.65	1.00	19.05	42.9
C19R-12-6	3/4″	19.05	3/8″	9.53	1.65	1.00	19.05	42.9
C19R-12-8	3/4″	19.05	1/2″	12.70	1.65	1.24	19.05	42.9
C19R-16-4	1″	25.40	1/4″	6.35	1.65	1.00	19.05	42.9
C19R-16-6	1″	25.40	3/8″	9.53	1.65	1.00	19.05	42.9
C19R-16-8	1″	25.40	1/2″	12.70	1.65	1.24	19.05	42.9
C19R-16-12	1″	25.40	3/4″	19.05	1.65	1.65	19.05	42.9
C10R-6-4	3/8″	9.53	1/4″	6.35	1.00	1.00	10.00	20.0
C10R-8-4	1/2″	12.70	1/4″	6.35	1.24	1.00	10.00	20.0
C10R-8-6	1/2″	12.70	3/8″	9.53	1.24	1.00	10.00	20.0
C10R-16-4	3/4″	19.05	1/4″	6.35	1.65	1.00	10.00	20.0
C10R-16-6	3/4″	19.05	3/8″	9.53	1.65	1.00	10.00	20.0
C10R-16-8	3/4″	19.05	1/2″	12.70	1.65	1.24	10.00	20.0

• All dimensions in millimeters unless specified as “inch”. Dimension are for reference only, subject to change.

Metal Face Seal Fittings

Feature

- Provides ultra-high purity metal to metal seal for leak - free service in high-vacuum and positive pressure applications
- The gasket is compressed by two highly polished beads when the male and female nuts are engaged.

Gasket options Include-silver plated stainless steel 316L, Nickel plated, unplated nikel or special request

Roll stamped or Laser etch marking & Heat code Traceability **SUPERLOK** Clean fittings are marked as standard with Manufacturer, Material, Surface Finish, Heat Code No, designation.

Standard surface finish is average Ra 0.25㎛ (Ra 10㎲in)

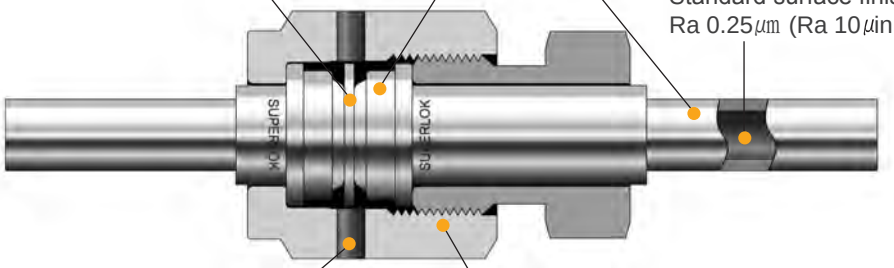

QA leak test port also allows visual inspection of sealing gasket prior to assembly.

The internal surface finish of the female nut is silver plated to ensure consistent, low make up torque.

Typical Assembly

Female Nut

Short Gland

Gasket

Long Gland

Male Nut

Metal Face Seal Fitting Installation Instructions

* Retainer Assembly
While tightening fittings, make sure seal parts and gaskets are free of scratch and dirts.

1. Prior to tightening fittings, make sure beads and gaskets are free of scratches and dirt.

2. Insert non-retained gasket into the female nut.
The gasket is self aligning.
Use caution not to damage sealing surfaces while inserting gasket into female nut.

3. Finger tighten male and female nuts assuring that all components have made proper contact and are in position for final tightening with wrenches.
Inspection port in female nut allows for easy visual inspection.

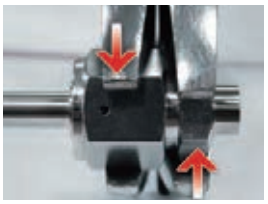

4. Hold the male nut or male body with the appropriate back up wrench and tighten the female nut 1/8 turn past finger tight. (316L and Ni gasket)
* 1/4 turn (copper gasket)

Glands

Female Gland

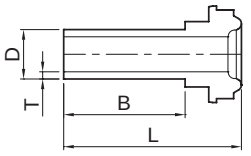

Part No.	Head Size(in)	Tube OD (D)		T	B	L	ANS(in)
		Size(in)	Size				
C19FG-2	1/8″	1/8″	3.18	0.70	19.05	27.40	1/8″
C6FG-4	1/4″	1/4″	6.35	1.00	6.35	15.24	1/4″
C10FG-4	1/4″	1/4″	6.35	1.00	10.00	18.89	1/4″
C19FG-4	1/4″	1/4″	6.35	1.00	19.05	27.94	1/4″
C6FG-6	1/2″	3/8″	9.53	1.00	6.35	15.75	1/2″
C10FG-6	1/2″	3/8″	9.53	1.00	10.00	19.40	1/2″
C19FG-6	1/2″	3/8″	9.53	1.00	19.05	28.45	1/2″
C6FG-8	1/2″	1/2″	12.70	1.24	6.35	15.75	1/2″
C10FG-8	1/2″	1/2″	12.70	1.24	10.00	19.40	1/2″
C19FG-8	1/2″	1/2″	12.70	1.24	19.05	28.45	1/2″
C19FG-12	3/4″	3/4″	19.05	1.65	19.05	34.50	3/4″
C19FG-16	1″	1″	25.40	1.65	19.05	38.60	1″
C6FG-8-4	1/2″	1/4″	6.35	1.00	6.35	15.75	1/2″
C10FG-8-4	1/2″	1/4″	6.35	1.00	10.00	19.40	1/2″
C19FG-8-4	1/2″	1/4″	6.35	1.00	19.05	28.45	1/2″

Male Gland

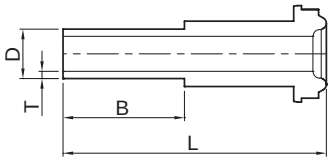

Part No.	Head Size(in)	Tube OD (D)		T	B	L	ANS(in)
		Size(in)	Size				
C19MG-2	1/8″	1/8″	3.18	0.70	19.05	36.00	1/8″
C6MG-4	1/4″	1/4″	6.35	1.00	6.35	30.48	1/4″
C10MG-4	1/4″	1/4″	6.35	1.00	10.00	34.13	1/4″
C19MG-4	1/4″	1/4″	6.35	1.00	19.05	43.18	1/4″
C6MG-6	1/2″	3/8″	9.53	1.00	6.35	32.77	1/2″
C10MG-6	1/2″	3/8″	9.53	1.00	10.00	36.42	1/2″
C19MG-6	1/2″	3/8″	9.53	1.00	19.05	45.47	1/2″
C16MG-8	1/2″	1/2″	12.70	1.24	6.35	32.77	1/2″
C10MG-8	1/2″	1/2″	12.70	1.24	10.00	36.42	1/2″
C19MG-8	1/2″	1/2″	12.70	1.24	19.05	45.47	1/2″
C19MG-12	3/4″	3/4″	19.05	1.65	19.05	51.56	3/4″
C19MG-16	1″	1″	25.40	1.65	19.05	58.93	1″
C6MG-8-4	1/2″	1/4″	6.35	1.00	6.35	32.77	1/2″
C10MG-8-4	1/2″	1/4″	6.35	1.00	10.00	36.42	1/2″
C19MG-8-4	1/2″	1/4″	6.35	1.00	19.05	45.47	1/2″

ANS : AVAILABLE NUT SIZE

Socket Weld Short Gland

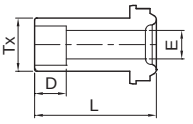

Part No.	Head Size(in)	Socket Size(in)	D	E	L	Tx
CSSG-4	1/4″	1/4″	7.1	4.6	12.7	8.9

• All dimensions in millimeters unless specified as “inch”. Dimension are for reference only, subject to change.

Socket Weld Long Gland

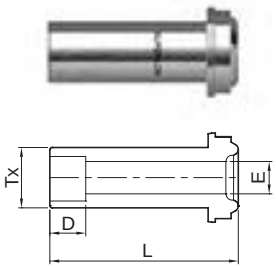

Part No.	Head Size(in)	Socket Size(in)	D	E	L	Tx
CSLG-2	1/8″	1/8″	2.5	2.30	17.8	5.1
CSLG-4	1/4″	1/4″	7.1	4.60	33.3	8.9
CSLG-6	1/2″	3/8″	7.9	7.10	38.1	15.2
CSLG-8	1/2″	1/2″	9.6	10.22	38.1	15.2
CSLG-12	3/4″	3/4″	11.2	15.75	50.8	22.4
CSLG-16	1″	1″	15.7	22.10	56.4	30.2

Reducing Socket Weld Long Gland

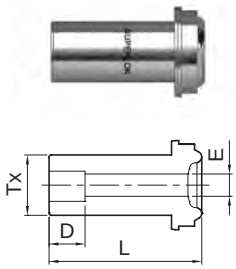

Part No.	Head Size(in)	Socket Size(in)	D	E	L	Tx
CRSLG-2-4	1/4″	1/8″	2.5	2.30	33.3	8.9
CRSLG-4-8	1/2″	1/4″	7.1	4.60	38.1	15.2

Blind Gland

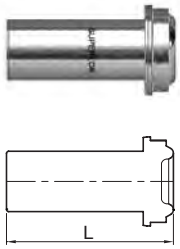

Part No.	Head Size(in)	L	Part No.	Head Size(in)	L
CBG-2	1/8″	17.8	CBG-12	3/4″	50.8
CBG-4	1/4″	33.3	CBG-16	1″	56.4
CBG-8	1/2″	38.1			

Male Weld Gland

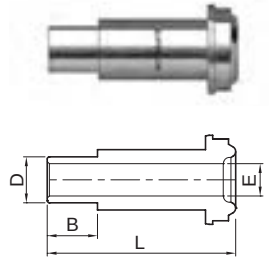

Part No.	Head Size(in)	Tube OD (D)		E	B	L	ANS(in)
		Size(in)	Size				
CMWG-2	1/8″	1/8″	3.18	1.5	7.1	17.8	1/8″
CMWG-4	1/4″	1/4″	6.35	3.0	10.4	33.3	1/4″
CMWG-6	1/2″	3/8″	9.53	7.1	10.4	38.1	3/8″
CMWG-8	1/2″	1/2″	12.70	10.2	12.7	38.1	1/2″

• All dimensions in millimeters unless specified as “inch”. Dimension are for reference only, subject to change.

Tube Adapter

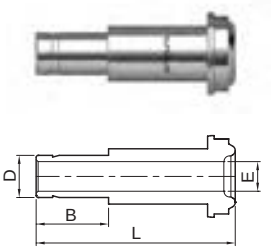

Part No.	Head Size(in)	Tube OD (D)		E	B	L	ANS(in)
		Size(in)	Size				
CTA-4	1/4″	1/4″	6.35	4.3	16.2	41.0	1/4″
CTA-6	1/2″	3/8″	9.53	6.8	17.8	46.0	3/8″
CTA-8	1/2″	1/2″	12.70	9.4	24.4	49.3	1/2″

ANS : AVAILABLE NUT SIZE

Double Male Union

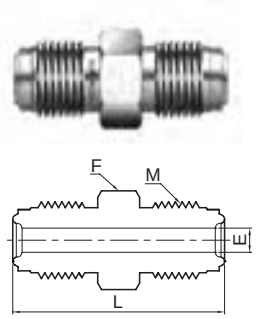

Part No.	Head Size(in)	E	L	F HEX	M
CMU-2	1/8″	2.30	28.70	9.52	5/16-24UNF
CMU-4	1/4″	4.35	39.37	15.88	9/16-18UNF
CMU-8	1/2″	10.22	46.74	23.81	7/8-14UNF
CMU-12	3/4″	15.75	61.98	33.34	1 1/4-18UNEF
CMU-16	1″	22.10	65.79	41.28	1 1/2-20UN

Double Male Reducing Union

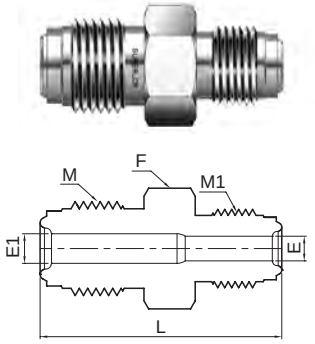

Part No.	Head Size(in)	Head Size(in)	E	E1	F HEX	L	M	M1
CMRU-4-2	1/4″	1/8″	2.30	4.35	15.88	34.8	9/16-18UNF	5/16-24UNF
CMRU-8-4	1/2″	1/4″	4.35	10.22	23.81	43.4	7/8-14UNF	9/16-18UNF

Bulkhead Union

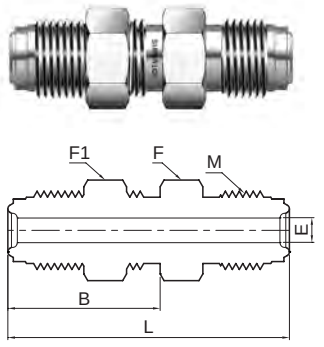

Part No.	Head Size(in)	E	B	L	F HEX	F1 HEX	M
CBHU-4	1/4″	4.35	33.00	56.60	19.05	19.05	9/16-18UNF
CBHU-8	1/2″	10.22	37.60	65.25	26.90	26.90	7/8-14UNF
CBHU-12	3/4″	15.75	43.40	79.00	38.10	38.10	1 1/4-18UNEF
CBHU-16	1″	22.10	47.10	86.00	44.40	44.40	1 1/2-20UN

• All dimensions in millimeters unless specified as “inch”. Dimension are for reference only, subject to change.

Tube Butt Weld Connector

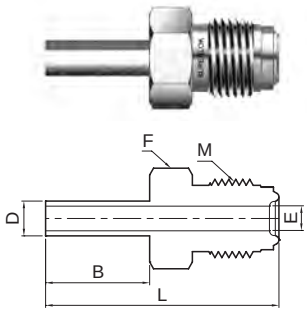

Part No.	Head Size(in)	Tube OD (D)		B	E	L	F1 HEX	M
		Size(in)	Size					
CTC-4	1/4″	1/4″	6.35	19.05	4.35	42.65	15.88	9/16-18UNF
CTC-6	1/2″	3/8″	9.53	19.05	10.22	46.70	23.81	7/8-14UNF
CTC-8	1/2″	1/2″	12.70	19.05	10.22	46.70	23.81	7/8-14UNF
CTC-12	3/4″	3/4″	19.05	19.05	15.75	55.55	33.34	1 1/4-18UNEF

Tube Butt Weld Bulkhead Connector

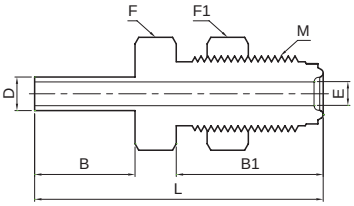

Part No.	Head Size(in)	Tube OD (D)		E	B	B1	L	F HEX	F1 HEX	M
		Size(in)	Size							
CTBHC-4	1/4″	1/4″	6.35	4.35	19.05	33.00	59.85	19.05	19.05	9/16-18UNF
CTBHC-8	1/2″	1/2″	12.70	10.22	19.05	37.60	65.25	26.90	26.90	7/8-14UNF
CTBHC-12	3/4″	3/4″	19.05	15.75	19.05	43.25	71.30	38.10	38.10	1 1/4-18UNEF

Coupling

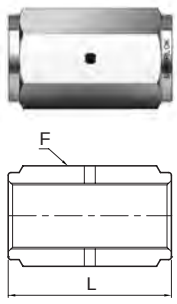

Part No.	Head Size(in)	F HEX	L	Part No.	Head Size(in)	F HEX	L
CCG-2	1/8″	11.11	16.8	CCG-12	3/4″	38.10	42.7
CCG-4	1/4″	19.05	30.2	CCG-16	1″	44.45	51.8
CCG-8	1/2″	26.98	33.3				

Double Female Reducing Union

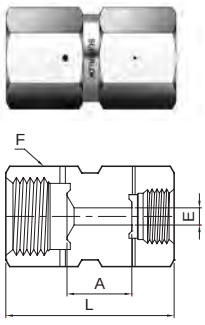

Part No.	Head Size(in)	Head Size(in)	E	F HEX	A	L
CFRU-8-4	1/2″	1/4″	6.4	26.98	8.9	35.8

• All dimensions in millimeters unless specified as “inch”. Dimension are for reference only, subject to change.

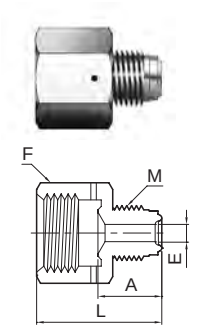

Reducing Adapter

Part No.	Head Size(in)	Head Size(in)	E	F HEX	A	L	M
CRA-2-4	1/8″	1/4″	2.3	19.05	17.5	30.2	5/16-24UNF
CRA-4-8	1/4″	1/2″	4.6	26.98	21.6	35.8	9/16-18UNF

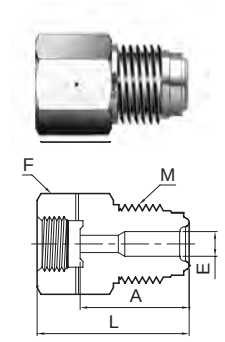

Reducing Bushing

Part No.	Head Size(in)	Head Size(in)	E	F HEX	A	L	M
CRB-4-2	1/4″	1/8″	3.3	19.05	19.3	26.9	9/16-18UNF
CRB-8-4	1/2″	1/4″	6.4	23.81	23.1	35.8	7/8-14UNF

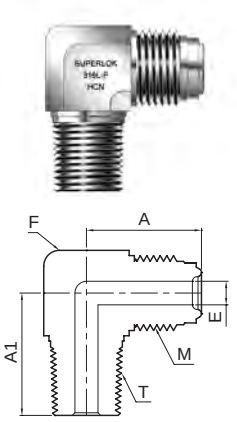

Male Elbow (NPT)

Part No.	Head Size(in)	T (NPT)	E	A	A1	F Body	M
CME-4-4N	1/4″	1/4″	4.35	27.18	27.18	15.9	9/16-18UNF
CME-8-6N	1/2″	3/8″	10.22	36.83	32.00	23.8	7/8-14UNF
CME-8-8N	1/2″	1/2″	10.22	36.83	36.83	23.8	7/8-14UNF
CME-12-12N	3/4″	3/4″	15.75	48.80	43.50	33.3	1 1/4-18UNEF

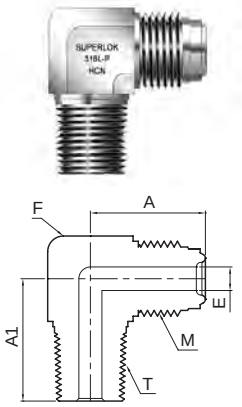

Male Elbow (PT)

Part No.	Head Size(in)	T (PT)	E	A	A1	F Body	M
CME-4-4R	1/4″	1/4″	4.35	27.18	27.18	15.9	9/16-18UNF
CME-8-6R	1/2″	3/8″	10.22	36.83	32.00	23.8	7/8-14UNF
CME-8-8R	1/2″	1/2″	10.22	36.83	36.83	23.8	7/8-14UNF
CME-12-12R	3/4″	3/4″	15.75	48.80	43.50	33.3	1 1/4-18UNEF

• All dimensions in millimeters unless specified as “inch”. Dimension are for reference only, subject to change.

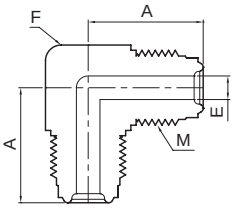

Union Elbow

Part No.	Head Size(in)	E	A	F Body	M
CUE-4	1/4″	4.35	27.18	15.9	9-16-18UNF
CUE-8	1/2″	10.22	36.83	23.8	7/8-14UNF
CUE-12	3/4″	15.75	48.77	33.3	1 1/4-18UNEF
CUE-16	1″	22.10	50.80	42.2	1 1/2-20UN

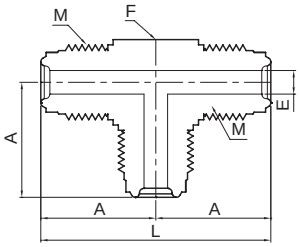

Union Tee

Part No.	Head Size(in)	E	A	L	F Body	M
CUT-4	1/4″	4.35	27.18	54.36	15.9	9/16-18UNF
CUT-8	1/2″	10.22	36.83	73.66	23.8	7/8-14UNF
CUT-12	3/4″	15.75	48.77	97.54	33.3	1 1/4-18UNEF
CUT-16	1″	22.10	50.80	101.60	42.2	1 1/2-20UN

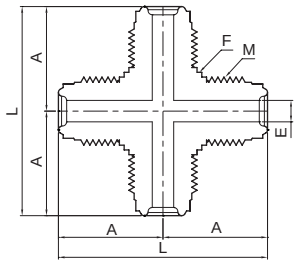

Union Cross

Part No.	Head Size(in)	E	A	L	F Body	M
CUC-4	1/4″	4.35	27.18	54.36	15.9	9/16-18UNF
CUC-8	1/2″	10.22	36.83	73.66	23.8	7/8-14UNF
CUC-12	3/4″	15.75	48.77	97.54	33.3	1 1/4-18UNEF
CUC-16	1″	22.10	50.80	101.60	42.2	1 1/2-20UN

• All dimensions in millimeters unless specified as “inch”. Dimension are for reference only, subject to change.

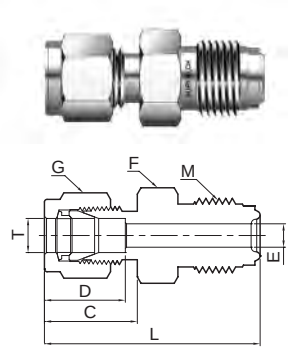

SUPERLOK Tube Fitting Connector

Part No.	Head Size(in)	Tube Size(in)	C	D	E	F HEX	G HEX	L	T(in)	M
CSC-2-4	1/4″	1/8″	15.20	12.70	4.35	15.90	11.11	38.9	1/8″	9/16-18UNF
CSC-4-4	1/4″	1/4″	17.80	15.20	4.35	15.90	14.29	41.1	1/4″	9/16-18UNF
CSC-6-8	1/2″	3/8″	19.30	16.80	10.22	23.81	17.46	46.7	3/8″	7/8-14UNF
CSC-8-8	1/2″	1/2″	21.80	22.90	10.22	23.81	22.23	49.5	1/2″	7/8-14UNF

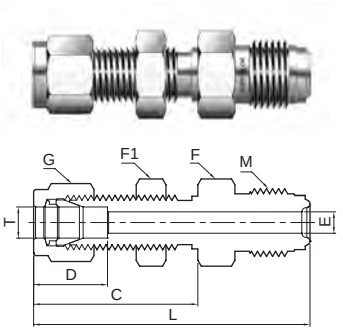

SUPERLOK Tube Fitting Bulkhead Connector

Part No.	Head Size(in)	Tube Size(in)	C	D	E	F HEX	F1 HEX	G HEX	L	T(in)	M
CBHSC-4	1/4″	1/4″	33.5	15.20	4.60	15.87	15.87	14.28	57.2	1/4″	9/16-18UNF
CBHSC-6	1/2″	3/8″	36.8	16.80	7.10	23.81	19.05	17.46	64.5	3/8″	7/8-14UNF
CBHSC-8	1/2″	1/2″	41.9	22.90	10.22	23.81	23.81	22.22	69.5	1/2″	7/8-14UNF

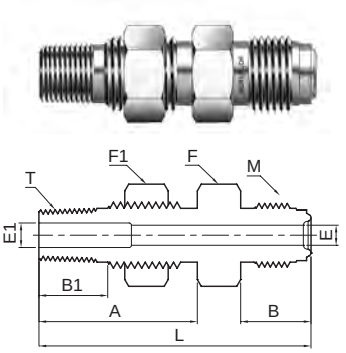

Bulkhead Male Connector (NPT)

Part No.	Head Size (in)	T (NPT)	B	B1	E	E1	F HEX	F1 HEX	A	L	M
CBHMC-4-4N	1/4″	1/4″	15.7	14.2	4.60	7.1	20.63	20.63	31.5	56.1	9/16-18UNF
CBHMC-8-4N	1/2″	1/4″	19.1	14.2	10.22	7.1	23.81	20.63	31.5	59.4	7/8-14UNF

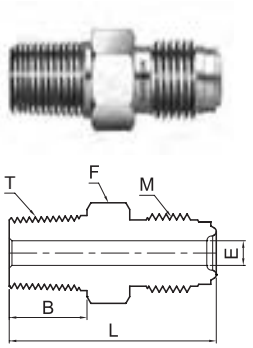

Male Connector (PT)

Part No.	Head Size(in)	T (PT)	E	B	L	F HEX	M
CMC-2-2R	1/8″	1/8″	2.30	9.60	27.20	11.11	5/16-24UNF
CMC-4-2R	1/4″	1/8″	4.35	9.60	33.30	15.90	9/16-18UNF
CMC-4-4R	1/4″	1/4″	4.35	14.22	37.84	15.90	9/16-18UNF
CMC-8-4R	1/2″	1/4″	10.22	14.22	41.87	23.80	7/8-14UNF
CMC-8-6R	1/2″	3/8″	7.44	14.22	41.87	23.80	7/8-14UNF
CMC-8-8R	1/2″	1/2″	10.22	19.05	46.74	23.80	7/8-14UNF
CMC-12-12R	3/4″	3/4″	15.75	19.05	55.63	33.30	1 1/4-18UNEF
CMC-16-16R	1″	1″	22.10	23.88	62.74	42.20	1 1/2-20UN

• All dimensions in millimeters unless specified as “inch”. Dimension are for reference only, subject to change.

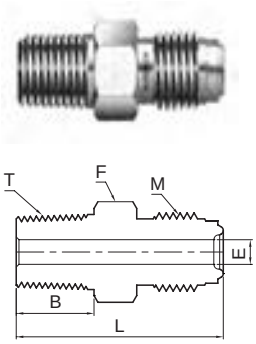

Male Connector (NPT)

Part No.	Head Size(in)	T (NPT)	E	B	L	F HEX	M
CMC-2-2N	1/8″	1/8″	2.30	9.60	27.20	11.11	5/16-24UNF
CMC-4-2N	1/4″	1/8″	4.35	9.60	33.30	15.90	9/16-18UNF
CMC-4-4N	1/4″	1/4″	4.35	14.22	37.84	15.90	9/16-18UNF
CMC-8-4N	1/2″	1/4″	10.22	14.22	41.87	23.80	7/8-14UNF
CMC-8-6N	1/2″	3/8″	7.44	14.22	41.87	23.80	7/8-14UNF
CMC-8-8N	1/2″	1/2″	10.22	19.05	46.74	23.80	7/8-14UNF
CMC-12-12N	3/4″	3/4″	15.75	19.05	55.63	33.30	1 1/4-18UNEF
CMC-16-16N	1″	1″	22.10	23.88	62.74	42.20	1 1/2-20UN

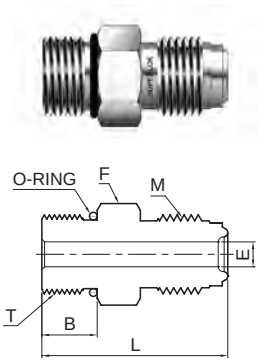

Male Connector (ST)

Part No.	Head Size(in)	T (ST)	E	B	L	F HEX	M
CMC-4-6U	1/4″	9/16-18UNF	4.35	9.90	33.80	19.05	9/16-18UNF
CMC-8-10U	1/2″	7/8-14UNF	10.22	12.70	42.20	25.40	7/8-14UNF
CMC-8-6U	1/2″	9/16-18UNF	10.22	9.90	37.60	23.80	7/8-14UNF
CMC-12-14U	3/4″	1 3/16-12UNF	15.75	15.00	51.50	34.90	1 1/4-18UNEF

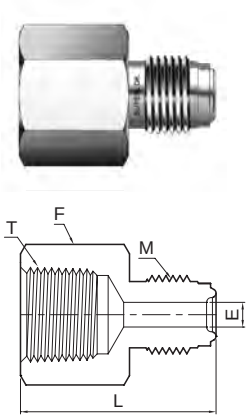

Female Connector (PT)

Part No.	Head Size(in)	T (PT)	E	L	F HEX	M
CFC-2-2R	1/8″	1/8″	2.30	30.20	14.28	5/16-24UNF
CFC-4-2R	1/4″	1/8″	4.35	35.80	15.90	9/16-18UNF
CFC-4-4R	1/4″	1/4″	4.35	39.10	19.05	9/16-18UNF
CFC-8-6R	1/2″	3/8″	7.44	44.70	23.81	7/8-14UNF
CFC-8-8R	1/2″	1/2″	10.22	50.50	26.98	7/8-14UNF
CFC-12-12R	3/4″	3/4″	15.75	59.90	33.33	1 1/4-18UNEF
CFC-16-16R	1″	1″	22.10	63.80	41.27	1 1/2-20UN

• All dimensions in millimeters unless specified as “inch”. Dimension are for reference only, subject to change.

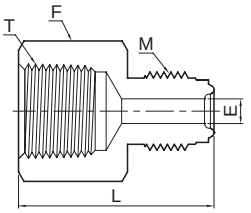

Female Connector (NPT)

Part No.	Head Size(in)	T (NPT)	E	L	F HEX	M
CFC-2-2N	1/8″	1/8″	2.30	30.20	14.28	5/16-24UNF
CFC-4-2N	1/4″	1/8″	4.35	35.80	15.90	9/16-18UNF
CFC-4-4N	1/4″	1/4″	4.35	39.10	19.05	9/16-18UNF
CFC-8-6N	1/2″	3/8″	7.44	44.70	23.81	7/8-14UNF
CFC-8-8N	1/2″	1/2″	10.22	50.50	26.98	7/8-14UNF
CFC-12-12N	3/4″	3/4″	15.75	59.90	33.33	1 1/4-18UNEF
CFC-16-16N	1″	1″	22.10	63.80	41.27	1 1/2-20UN

Gaskets

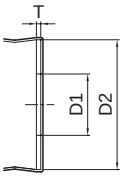

Gasket Retainer Assembly

Part No.	Head Size(in)	T	D1	D2
CGR-4	1/4″	0.80	5.6	11.85
CGR-8	1/2″	0.80	11.2	19.27
CGR-12	3/4″	0.80	16.7	27.90
CGR-16	1″	0.80	22.6	34.20

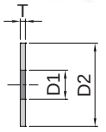

Gasket

Part No.	Head Size(in)	T	D1	D2
CGT-2	1/8″	0.80	2.30	6.60
CGT-4	1/4″	0.80	5.60	12.70
CGT-8	1/2″	0.80	11.20	19.80
CGT-12	3/4″	0.80	16.70	29.00
CGT-16	1″	0.80	22.60	35.80

• All dimensions in millimeters unless specified as “inch”. Dimension are for reference only, subject to change.

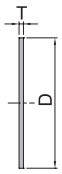

Blind Gasket

Part No.	Head Size(in)	T	D
CBGT-4	1/4″	0.80	11.90
CBGT-8	1/2″	0.80	19.80
CBGT-12	3/4″	0.80	28.90
CBGT-16	1″	0.80	35.50

Nuts, Caps and Plugs

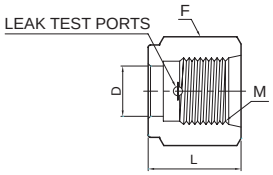

Female Nut

Part No.	Head Size(in)	L	D	F Hex	M
CFN-2	1/8″	13.50	5.30	11.11	5/16-24UNF
CFN-4	1/4″	20.50	9.10	19.05	9/16-18UNF
CFN-8	1/2″	22.30	15.50	26.99	7/8-14UNF
CFN-12	3/4″	28.40	22.60	38.10	1 1/4-18UNEF
CFN-16	1″	34.00	30.50	44.45	1 1/2-20UN

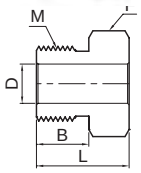

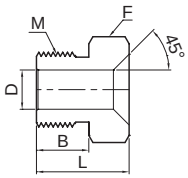

(1/4" ONLY)

Male Nut

Part No.	Head Size(in)	L	B	D	F Hex	M
CMN-2	1/8″	12.70	8.20	5.30	9.52	5/16-24UNF
CMN-4	1/4″	18.00	11.00	9.10	15.88	9/16-18UNF
CMNS-4	1/4″	13.70	11.00	9.10	15.88	9/16-18UNF
CMN-8	1/2″	20.50	12.70	15.50	23.81	7/8-14UNF
CMN-12	3/4″	25.40	16.00	22.60	33.34	1 1/4-18UNEF
CMN-16	1″	30.20	20.00	30.50	41.28	1 1/2-20UN

*CMNS-4 : Short Male Nut 1/4” Only

• All dimensions in millimeters unless specified as “inch”. Dimension are for reference only, subject to change.

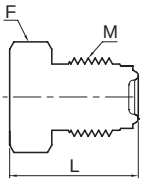

Plug

Part No.	Head Size(in)	L	F Hex	M
CPG-2	1/8″	17.30	9.52	5/16-24UNF
CPG-4	1/4″	23.37	15.88	9/16-18UNF
CPG-8	1/2″	27.43	23.81	7/8-14UNF
CPG-12	3/4″	36.32	33.34	1 1/4-18UNEF
CPG-16	1″	38.61	41.28	1 1/2-20UN

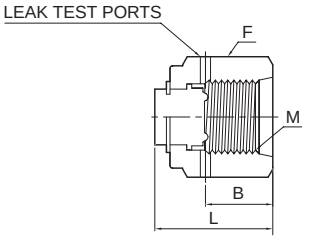

Cap

Part No.	Head Size(in)	L	B	F Hex	M
CCP-2	1/8″	16.00	7.60	11.11	5/16-24UNF
CCP-4	1/4″	24.20	11.18	19.05	9/16-18UNF
CCP-8	1/2″	25.50	11.43	26.99	7/8-14UNF
CCP-12	3/4″	32.77	13.72	38.10	1 1/4-18UNEF
CCP-16	1″	39.12	16.00	44.45	1 1/2-20UN

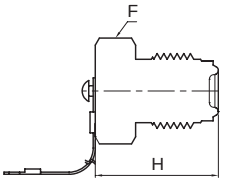

Plug (Cable Type)

Part No.	Head Size(in)	F Hex	H	Cable Length
CPGC-4	1/4″	15.88	23.37	260
CPGC-8	1/2″	23.81	27.43	260

High - Flow Connection - “H” Type

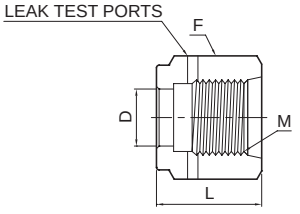

High Flow Female Nut

Part No.	Head Size(in)	L	D	F HEX	M
CHFN-4	1/4″	20.57	9.90	19.05	9/16-18UNF

• All dimensions in millimeters unless specified as “inch”. Dimension are for reference only, subject to change.

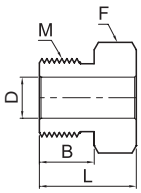

High Flow Male Nut

Part No.	Head Size(in)	B	L	D	F HEX	M
CHMN-4	1/4″	11.00	18.03	9.90	15.88	9/16-18UNF

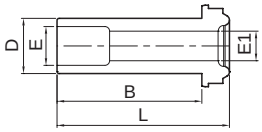

High Flow Long Gland

Part No.	Head Size(in)	Tube OD (D)		B	L	E	E1
		Size(in)	Size				
CHLG-4-6	1/4″	3/8″	9.53	28.40	33.20	7.50	6.28

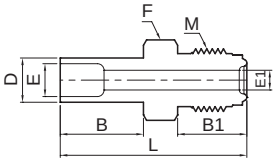

High Flow Tube Butt Weld Connector

Part No.	Head Size(in)	Tube OD (D)		E	E1	B	B1	L	F HEX	M
		Size(in)	Size							
CHTC-4-6	1/4″	3/8″	9.53	7.50	6.35	19.05	15.80	42.75	15.88	9/16-18UNF

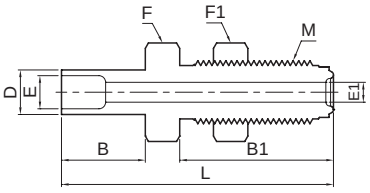

High Flow Tube Butt Weld Bulkhead Connector

Part No.	Head Size(in)	Tube OD (D)		B	B1	E	E1	L	F HEX	F1 HEX	M
		Size(in)	Size								
CHBHC-4-6	1/4″	3/8″	9.53	19.05	33.00	7.50	6.35	59.85	19.05	19.05	9/16-18UNF

• All dimensions in millimeters unless specified as “inch”. Dimension are for reference only, subject to change.

Welded Assemblies

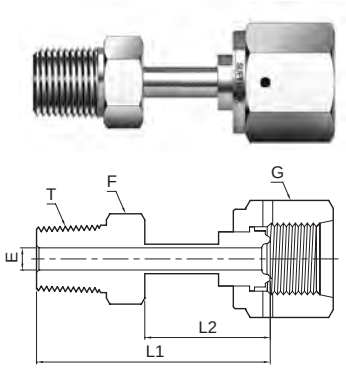

Welded Male Connector (PT)

Part No.	Head Size(in)	T (PT)	E	L	L1	F HEX	G HEX
CWMC-4-2R	1/4″	1/8″	4.35	40.10	24.10	11.11	19.05
CWMC-4-4R	1/4″	1/4″	4.35	45.50	23.40	14.29	19.05
CWMC-8-6R	1/2″	3/8″	7.44	48.00	25.40	17.46	26.99
CWMC-8-8R	1/2″	1/2″	10.22	53.10	25.60	22.23	26.99

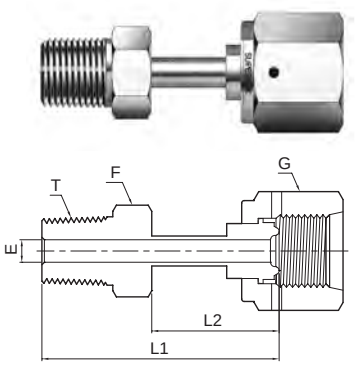

Welded Male Connector (NPT)

Part No.	Head Size(in)	T (NPT)	E	L	L1	F HEX	G HEX
CWMC-4-2N	1/4″	1/8″	4.35	40.10	24.10	11.11	19.05
CWMC-4-4N	1/4″	1/4″	4.35	45.50	23.40	14.29	19.05
CWMC-8-6N	1/2″	3/8″	7.44	48.00	25.40	17.46	26.99
CWMC-8-8N	1/2″	1/2″	10.22	53.10	25.60	22.23	26.99

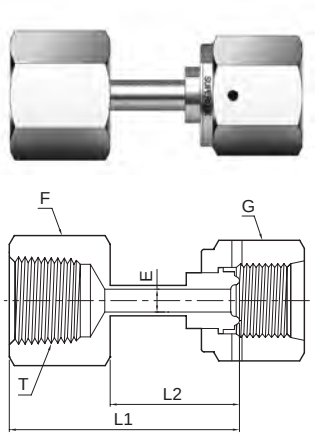

Welded Female Connector (PT)

Part No.	Head Size(in)	T (PT)	E	L	L1	F HEX	G HEX
CWFC-4-4R	1/4″	1/4″	4.35	45.00	23.40	19.05	19.05
CWFC-8-6R	1/2″	3/8″	7.44	49.50	26.90	22.23	26.99
CWFC-8-8R	1/2″	1/2″	10.22	55.40	26.40	26.99	26.99

• All dimensions in millimeters unless specified as “inch”. Dimension are for reference only, subject to change.

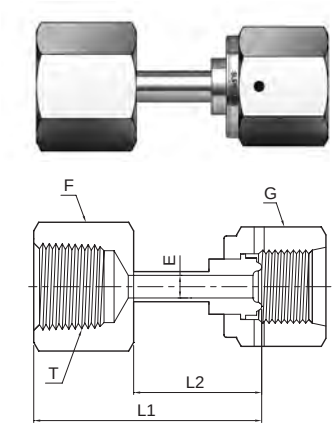

Welded Female Connector (NPT)

Part No.	Head Size(in)	T (NPT)	E	L	L1	F HEX	G HEX
CWFC-4-4N	1/4″	1/4″	4.35	45.00	23.40	19.05	19.05
CWFC-8-6N	1/2″	3/8″	7.44	49.50	26.90	22.23	26.99
CWFC-8-8N	1/2″	1/2″	10.22	55.40	26.40	26.99	26.99

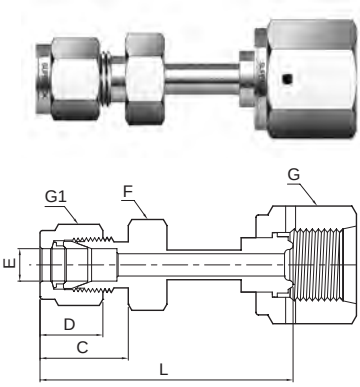

Welded Lok Connector

Part No.	Head Size(in)	Tube Size(in)	C	D	E	L	F HEX	G HEX	G1 HEX
CWSC-4	1/4″	1/4″	17.78	15.24	4.35	49.28	12.70	19.00	17.00
CWSC-4-6	1/4″	3/8″	19.30	16.76	7.44	50.04	15.88	19.00	19.00
CWSC-8	1/2″	1/2″	21.84	22.86	10.22	56.64	20.64	26.00	19.00

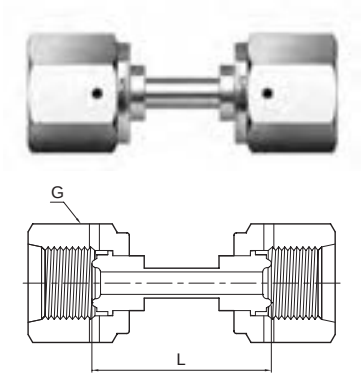

Welded Female Union

Part No.	Head Size(in)	L	G HEX
CWFU-4	1/4″	43.40	19.05
CWFU-8	1/2″	46.70	26.99

• All dimensions in millimeters unless specified as “inch”. Dimension are for reference only, subject to change.

Ultra High Purity Fittings

SUPERLOK®

Instrumentation Ball Valves

Ball Valves | Key Operation Ball Valves
Ball Valve to DIN Standard | Swing-Out Ball Valves
Trunnion Ball Valves | Forged High Pressure Ball Valves

www.superlok.com

Ball Valve SBV120H Series

120 Series One Piece Type

Features

- Simple design with one piece body
- Tight and smooth, low torque and easy operation
- One-piece ball stem
- Panel mountable
- Variety of End Connections
- Straight, Angle and 3-Way flow patterns
- Each and every valve is tested at the factory

Specifications

Pressure rating	3000psig (206bar)@70°F (21°C)
Temperature rating	50 to 150°F (10 to 65°C) with PTFE seat and packing
Body material	316 stainless steel and Brass
Port Connections	1/16″ to 3/4″ and 3mm to 12mm
Orifice	0.052″ and 0.406″ (1.3mm to 10.3mm)

Testing

- Each Valve is tested with nitrogen at 1000psig(69bar) to maximum allowable leak rate of 0.1 SCCM.

Packing Adjustment

- Valves are adjusted for factory testing at 1000psig(69bar).
- Packing must be readjusted for service at higher pressures.

Materials of Construction

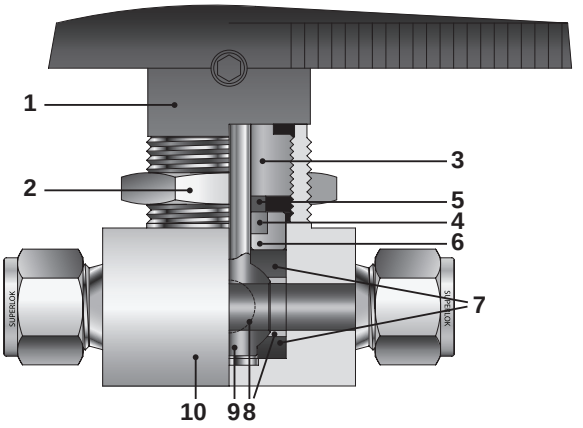

No.	Component	Material Grade / ASTM Specification	
		Stainless Steel	Brass
1	Handle	Zinc	
	Set Screw	Stainless Steel	
2	Panel Nut	Stainless Steel	Brass
3	Packing Bolt	SS316 / A276	Brass / B16
*4	Packing	PTFE	
5	Upper Packing Gland	SS316 / A276	
6	Lower Packing Gland		
*7	Upper&Lower Ball Seat	PTFE	
*8	Side Disc	SS316 - Sintered	
	Side Ring		
*9	Ball Stem	SS316 / A276	
*10	Body	SS316 / A182	Brass / B16

※Wetted components are marked "*"

SBV120H Series : 2-Way (On - Off Valve)

STRAIGHT TYPE

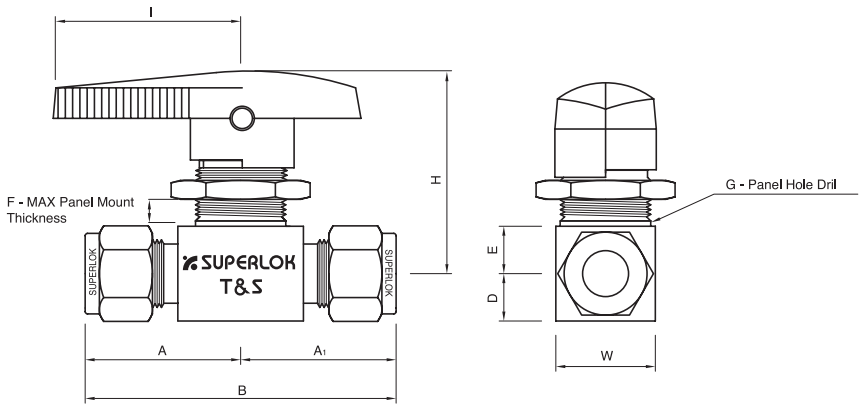

ANGLE TYPE

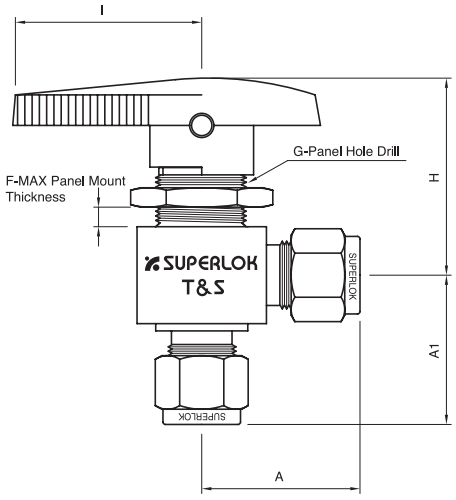

Table of dimensions

Part Number		Orifice	Cv	End Connections		Dimensions									
				Inlet	Outlet	A	A1	B	D	E	F	G	H	I	W
SBV120 H1	S1	1.3	0.1	1/16″ SUPERLOK		21.3	21.3	42.6	7.1	8.7	6.4	15.0	36.0	29.0	15.0
	S3M	2.4	0.2	3mm SUPERLOK		25.4	25.4	50.8							
	S2		0.2	1/8″ SUPERLOK											
	F2N	3.2	0.5	1/8″ FEMALE NPT		20.6	20.6	41.2							
	S6M		0.6	6mm SUPERLOK		27.7	27.7	55.4							
	S4		0.6	1/4″ SUPERLOK											
SBV120 H2	F2N	4.8	1.2	1/8″ FEMALE NPT		25.4	25.4	50.8	9.4	11.2	4.8	19.8	43.7	38.5	19.8
	F4N		0.9	1/4″ FEMALE NPT		26.2	26.2	52.4							
	F4R		0.9	1/4″ ISO FEMALE											
	M4N		1.2	1/4″ MALE NPT		25.4	25.4	50.8							
	M4N-S4		1.6	1/4″ MALE NPT	1/4″ SUPERLOK	25.4	30.2	55.6							
	S6M		1.4	6mm SUPERLOK		30.2	30.2	60.4							
	S4		1.4	1/4″ SUPERLOK											
	S8M		1.5	8mm SUPERLOK		31.0	31.0	62.0							
	S6		1.5	3/8″ SUPERLOK		32.5	32.5	65.0							
SBV120 H3	F4N	7.1	3.0	1/4″ FEMALE NPT		31.8	31.8	63.6	14.2	14.2	9.4	28.5	56.1	51.0	28.5
	F6N		2.6	3/8″ FEMALE NPT											
	F6R		2.6	3/8″ ISO FEMALE											
	S6		6.0	3/8″ SUPERLOK		38.9	38.9	77.8							
	S10M		6.0	10mm SUPERLOK											
SBV120 H4	F8N	10.3	6.3	1/2″ FEMALE NPT		39.6	39.6	79.2	17.5	17.5	9.4	38.1	71.8	75.0	75.0
	F8R		6.3	1/2″ ISO FEMALE											
	S12M		12.0	12mm SUPERLOK		50.0	50.0	100							
	S8		12.0	1/2″ SUPERLOK											
	S12		6.4	3/4″ SUPERLOK											

• Dimensions shown with SUPERLOK nuts measure in the finger-tight, where applicable.
• All dimensions in millimeters unless specified as “inch”. Dimension are for reference only, subject to change.

SBV120H Series : 3-Way (Switching Valve)

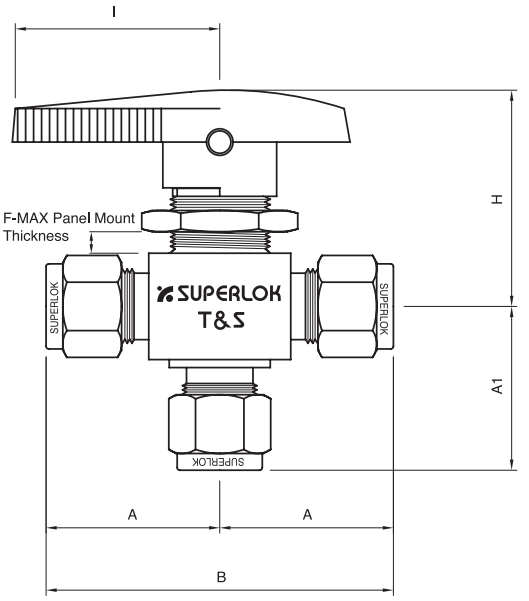

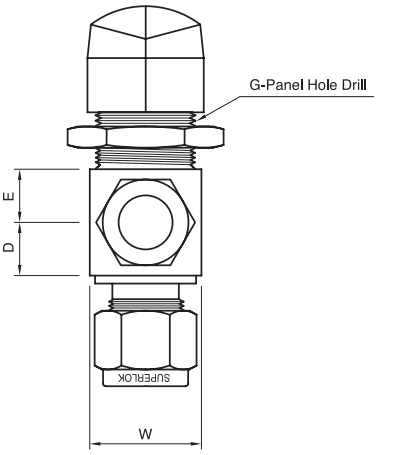

Table of dimensions

Part Number		Orifice	Cv	End Connections		Dimensions									
				Inlet	Outlet	A	A1	B	D	E	F	G	H	I	W
SBV120 H13	S1	1.3	0.08	1/16″ SUPERLOK		21.3	20.6	42.6	7.1	8.7	6.4	15.0	36.0	29.0	15.0
	S3M	2.4	0.15	3mm SUPERLOK		25.4	24.6	50.8							
	S2		0.15	1/8″ SUPERLOK											
	F2N	3.2	0.3	1/8″ FEMALE NPT		20.6	20.6	41.2							
	S6M		0.35	6mm SUPERLOK		27.7	26.9	55.4							
	S4		0.35	1/4″ SUPERLOK											
SBV120 H23	F4N	4.8	0.75	1/4″ FEMALE NPT		26.2	26.2	52.4	9.4	11.2	4.8	19.8	43.7	38.5	19.8
	F4R			1/4″ ISO FEMALE											
	M4N-S4		0.8	1/4″ MALE NPT	1/4″ SUPERLOK	25.4	30.2	55.6							
	S6M		0.9	6mm SUPERLOK		30.2	30.2	60.4							
	S4			1/4″ SUPERLOK											
	S8M		0.8	8mm SUPERLOK		31.0	31.0	62.0							
SBV120 H33	F4N	7.1	1.7	1/4″ FEMALE NPT		31.8	31.8	63.6	14.2	14.2	9.4	28.5	56.1	51.0	28.5
	F6N		1.5	3/8″ FEMALE NPT											
	F6R			3/8″ ISO FEMALE											
	S6		2.0	3/8″ SUPERLOK		38.9	38.9	77.8							
	S10M			10mm SUPERLOK											
SBV120 H43	F8N	10.3	3.5	1/2″ FEMALE NPT		39.6	39.6	79.2	17.5	17.5	9.4	38.1	71.8	75.0	38.1
	F8R			1/2″ ISO FEMALE											
	S12M		4.6	12mm SUPERLOK		50.0	50.0	100							
	S8			1/2″ SUPERLOK											
	S12		3.8	3/4″ SUPERLOK											

• Dimensions shown with SUPERLOK nuts measure in the finger-tight, where applicable.
• All dimensions in millimeters unless specified as “inch”. Dimension are for reference only, subject to change.

Pressure Rating

Vlave	2-Way Straight Pattern psig (bar)	2-Way Angle Pattern psig (bar)	3-Way Switching psig (bar)
SBV120H1	2500 (172)	2500 (172)	2500 (172)
SBV120H2	3000 (206)	2500 (172)	2500 (172)
SBV120H3	2500 (172)	1500 (103)	1500 (103)
SBV120H4	2500 (172)	1500 (103)	1500 (103)

Flow Data at 70°F (21°C)

Straight Type

Cv	Pressure Dorp to Atmospher(Δp)psi					
	10	50	100	10	50	100
	Air Flow, SCFM			Water Flow, US GPM		
0.50	6.9	19.1	33.9	1.6	3.5	5.0
0.60	8.3	23.0	40.7	1.9	4.2	6.0
0.90	12.0	34.0	61.0	2.8	6.4	9.0
1.2	17.0	46.0	81.0	3.8	8.5	12.0
1.5	21.0	57.0	100.0	4.7	11.0	15.0
1.6	22.0	61.0	110.0	5.0	11.0	16.0
2.4	33.0	92.0	160.0	7.6	17.0	24.0
2.6	36.0	99.5	176.0	8.2	18.0	26.0
3.0	41.5	115.0	203.0	9.5	21.0	30.0
6.0	83.0	230.0	407.0	19.0	42.0	60.0
6.3	87.2	241.0	427.0	19.9	44.5	63.0
6.4	88.6	245.0	434.0	20.2	45.3	64.0
12	166.0	459.0	814.0	38.0	85.0	120.0

Angle Type & 3-Way

Cv	Pressure Dorp to Atmospher(Δp)psi					
	10	50	100	10	50	100
	Air Flow, SCFM			Water Flow, US GPM		
0.30	4.2	11.5	20.3	0.9	2.1	3.0
0.35	4.8	13.4	23.7	1.1	2.4	3.5
0.75	10.0	29.0	51.0	2.3	5.3	7.5
0.80	11.0	31.0	54.0	2.5	5.6	8.0
0.90	12.0	34.0	61.0	2.8	6.3	9.0
1.5	20.6	57.4	102.0	4.7	11.0	15.0
1.7	23.5	65.0	115.0	5.3	12.0	17.0
20.	27.7	76.5	136.0	6.3	14.0	20.0
3.5	48.4	134.0	237.0	11.0	25.0	35.0
3.8	52.6	145.0	258.0	12.0	27.0	38.0
4.6	63.7	176.0	312.0	15.0	33.0	46.0

Ordering Information

Example : SBV120H1 A - S 6M - SS

1 2 3 4 5

1. Valve Series

SBVH120H1
SBVH120H2
SBVH120H3
SBVH120H4

2. Pattern Designator

BLANK : 2-Way Straight (Standard)
A:2-Way Angle
3:3-Way

3. End Connection Type

S : SUPERLOK Tube Fitting
F : Female Thread
M : Male Thread
MS : Male Thread to SUPERLOK Tube Fitting

4. End Connection Size

Tube O.D Designation

Tube O.D (inch)	1/16	1/8	1/4	3/8	1/2
Designation	1	2	4	6	8
Tube O.D (mm)	3	6	8	10	12
Designation	3M	6M	8M	10M	12M

Pipe Thread Designation

Size(inch)	1/8	1/4	3/8	1/2
Screwed NPT	2N	4N	6N	8N
Screwed BSPT	2R	4R	6R	8R

5. Meterial Designator

SS(BLANK) : 316 Stainless Steel
B : BRASS

Ball Valve SBV210 Series

210 Series Two Piece Type

Features

- Compact design
- Tight and smooth, low torque and easy operation
- Butterfly and lever handle available
- Variety of End Connections
- Each and every valve is tested at the factory

Specifications

Pressure rating	1000psig (69bar)@70°F (21°C)
Body material	316 stainless steel and Brass
Port Connections	1/4″ to 1″ and 6mm to 16mm
Orifice	5.0mm to 16.0mm

Pressure-Temperature Ratings

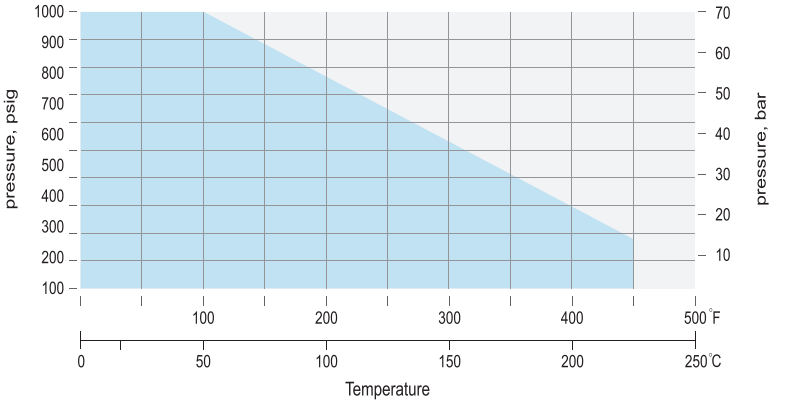

Materials of Construction

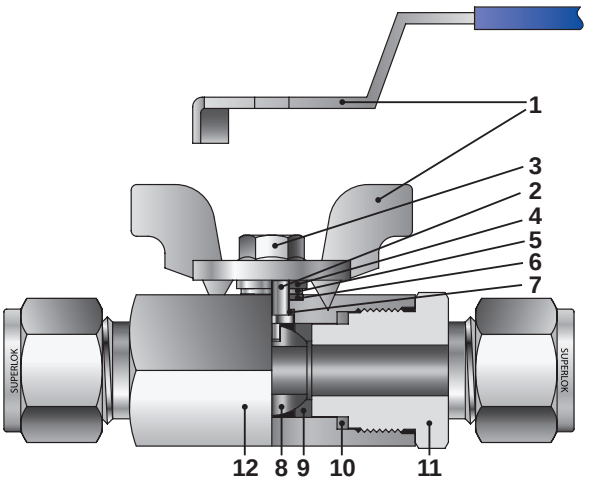

No.	Component	Material Grade / ASTM Specification	
		Stainless Steel	Brass
1	Handle	SS304 Lever handle with PVC color coated	
		Zinc butterfly handle with nickel plated	
2	Stem	SS316 / A276	
3	Lock Nut	Stainless Steel	
4	Upper Stem Washer	SS304 / A276	
5	Lower Stem Washer		
6	Upper Stem Seal	PTFE	
7	Lower Stem Seal		
8	Ball	SS316 / A276	
9	Seat	PTFE	
10	Connector Seal		
11	End Connector	SS316 / A276	Brass / B16
	Insert(for Female Thread)	SS316 / A276	
12	Body	SS316 / A276	Brass / B16

SBV210 Series

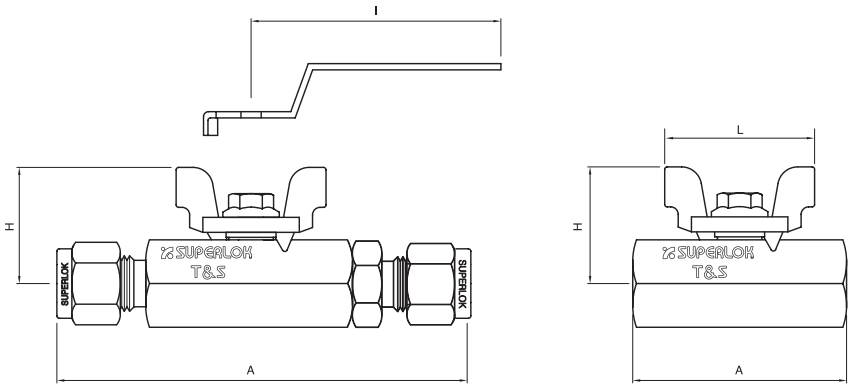

Table of dimensions

Part Number		Orifice	Cv	End Connections	Dimensions			
					A	H	I	L
SBV210	S6M	5.0	1.25	6mm SUPERLOK	79.8	23.0	60.0	30.0
	S4		1.25	1/4″ SUPERLOK	79.8			
	F4N		1.4	1/4″ FEMALE NPT	42.8			
	S10M	7.5	2.6	10mm SUPERLOK	91.5	31.0	90.0	48.0
	S6		2.5	3/8″ SUPERLOK	91.5			
	F6N		2.6	3/8″ FEMALE NPT	46.6			
	S12M	9.0	9.5	12mm SUPERLOK	101.4	34.0	90.0	50.0
	S8		9.5	1/2″ SUPERLOK	101.4			
	F8N		9.5	1/2″ FEMALE NPT	55.0			
	S16M	12.5	10.6	16mm SUPERLOK	107.6	39.0	100.0	55.0
	S10		10.6	5/8″ SUPERLOK	107.0			
	S12		12.7	3/4″ SUPERLOK	107.0			
	F12N		12.7	3/4″ FEMALE NPT	61.3			
	S16	16.0	17.5	1″ SUPERLOK	131.0	45.0	100.0	68.0
	F16N		17.5	1″ FEMALE NPT	76.0			

SBVA210 Series

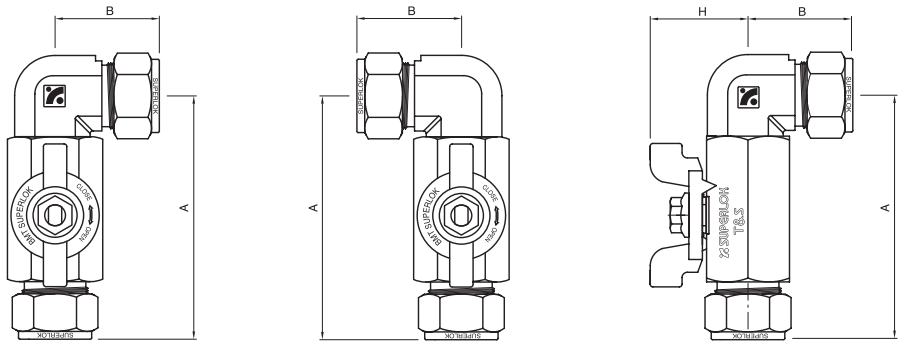

SBVA 210R SBVA 210L SBVA 210D

Table of dimensions

Part Number		Orifice	End Connections	Dimensions		
				A	B	H
SBVA210	S4	5.0	1/4″ SUPERLOK	65.3	30.5	23.0
	S6	7.5	3/8″ SUPERLOK	77.5	36.1	31.0
	S8	9.0	1/2″ SUPERLOK	87.9	38.1	34.0
	S12	12.5	3/4″ SUPERLOK	93.8	39.9	39.0
	S16	16.0	1″ SUPERLOK	115.3	49.0	45.0

• All dimensions in millimeters unless specified as “inch”. Dimension are for reference only, subject to change.

SBVT210 Series

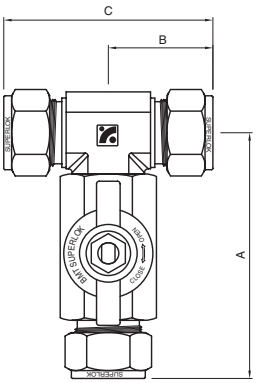

Table of dimensions

Part Number		Orifice	End Connections	Dimensions		
				A	B	C
SBVT210	S4	5.0	1/4″ SUPERLOK	65.3	30.5	61.0
	S6	7.5	3/8″ SUPERLOK	77.5	36.1	72.2
	S8	9.0	1/2″ SUPERLOK	87.9	38.1	76.2
	S12	12.5	3/4″ SUPERLOK	93.8	39.9	79.8
	S16	16.0	1″ SUPERLOK	115.3	49.0	98.0

• All dimensions in millimeters unless specified as “inch”. Dimension are for reference only, subject to change.

Ordering Information

Example : **SBV210 - S 8 - BH - SS**

1 2 3 4 5

1. Valve Series

SBV210

SBVA210

SBVT210

2. End Connection

S : SUPERLOK Tube Fitting

F : Female Thread

3. End Connection Size

Tube O.D Designation

Tube O.D (inch)	1/4	3/8	1/2	3/4	1
Designation	4	6	8	12	16
Tube O.D (mm)	6	10	12	16	
Designation	6M	10M	12M	16M	

Pipe Thread Designation

Size(inch)	1/4	3/8	1/2	3/4	1
Screwed NPT	4N	6N	8N	12N	16N
Screwed BSPT	4R	6R	8R	12R	12R

4. Handle Designator

BLANK : Butterfly Handle (Standard)

BH : Bar Handle

5. Meterial Designator

SS(BLANK) : 316 Stainless Steel

B : BRASS

Ball Valve SBVH360 Series

360 Series Three Piece High-Pressure Type

Features

- Compact design
- High flow rate with maximum orifice
- Variety of End Connections
- Anti blow-out stem design
- Each and every valve is tested at the factory
- Fire safety design available

Specifications

Pressure rating	6000psig (414bar)@70°F (21°C)
Temperature rating	-22 to 355°F (-30 to 150°C) with PCTFE seat -65 to 500°F (-54 to 260°C) with PEEK seat
Body material	316 stainless steel and Brass
Port Connections	1/4″ to 1″ and 6mm to 25mm
Orifice	10.0mm to 19.0mm

Testing

- Each Valve is tested with nitrogen at 1000psig(69bar) to maximum allowable leak rate of 0.1 SCCM.
- Hydrostatic shell test is porformed at 1.5 times of the working pressure. (OPTION)

Materials of Construction

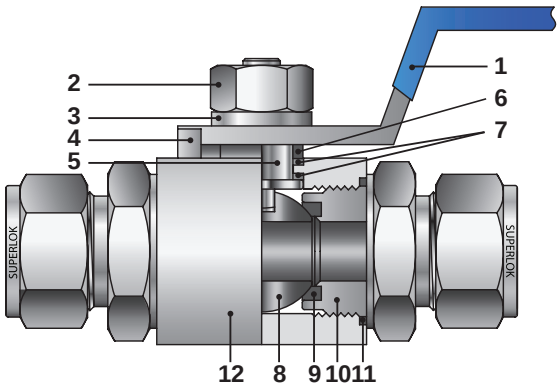

No.	Component	Material Grade / ASTM Specification Stainless Steel
1	Handle	SS304 Lever handle with PVC color coated
2	Lock Nut	Stainless Steel
3	Spring Washer	
4	Pin	
*5	Stem	SS316 / A276
6	Stem Washer	SS304 / A276
*7	Stem Packing	PTFE
*8	Ball	SS316 / A276
*9	Seat	PCTFE (Standard)
*10	End Connector	SS316 / A276
*11	Connector Seal	PTFE
*12	Body	SS316 / A276

※Wetted components are marked "*"

SBVH360 Series(2-Way)

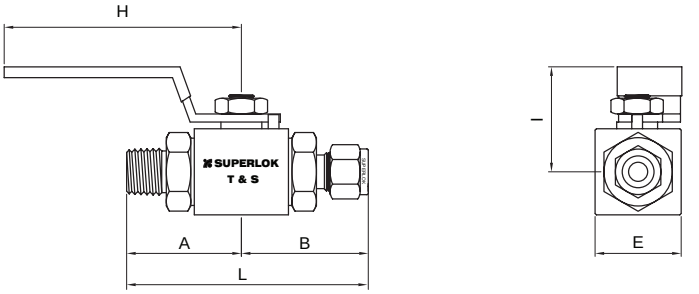

Table of dimensions

Part Number		Orifice	Cv	End Connections	Dimensions					
					A	B	L	H	I	E
SBVH3601	S4	10.0	1.2	1/4″ SUPERLOK	45.7	45.7	91.4	115	38.5	32.0
	S6		3.7	3/8″ SUPERLOK	47.5	47.5	94.4			
	S8		7.5	1/2″ SUPERLOK	49.8	49.8	99.6			
	F4N			1/4″ FEMALE NPT	37.0	37.0	74.0			
	F6N			3/8″ FEMALE NPT	38.0	38.0	76.0			
	F8N			1/2″ FEMALE NPT	41.5	41.5	83.0			
	M4N		3.7	1/4″ MALE NPT	42.1	42.1	84.2			
	M6N		7.2	3/8″ MALE NPT	42.1	42.1	84.2			
	M8N		7.5	1/2″ MALE NPT	47.0	47.0	94.0			
SBVH3602	F8N	12.7	10.0	1/2″ FEMALE NPT	45.5	45.5	91.0	165	51.9	40.0
	F12N			3/4″ FEMALE NPT	51.0	51.0	102.0			
	M12N			3/4″ MALE NPT	52.5	52.5	105.0			
	S10			5/8″ SUPERLOK	54.0	54.0	108.0			
	S12			3/4″ SUPERLOK	54.0	54.0	108.0			
SBVH3603	F12N	19.0	30.0	3/4″ FEMALE NPT	54.0	54.0	108.0	165	57.0	50.0
	F16N			1″ FEMALE NPT	62.5	62.5	125.0			
	S12		19.0	3/4″ SUPERLOK	61.9	61.9	123.8			
	S16		30.0	1″ SUPERLOK	66.4	66.4	132.8			
	M12N		19.0	3/4″ MALE NPT	59.0	59.0	118.0			
	M16N		30.0	1″ MALE NPT	63.8	63.8	127.6			

SBVH360-3S Series (3-Way)

SIDE INLET PORT

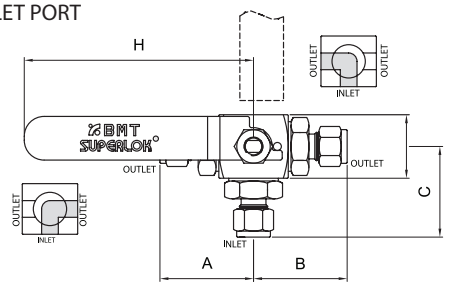

SBVH360-3 Series (3-Way)

BOTTOM INLET PORT

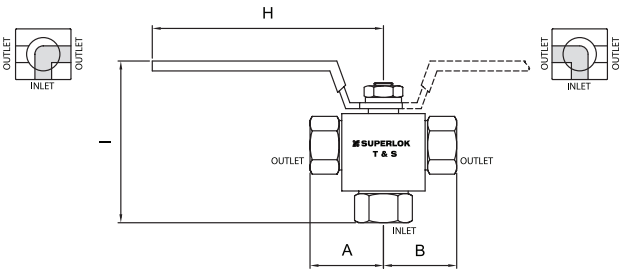

Table of dimensions

Part Number		Orifice	End Connections	Dimensions				
				A	B	I	H	C
SBVH36013 & SBVH36013S	S4	10.0	1/4″ SUPERLOK	45.7	45.7	91.4	115	53.3
	S6		3/8″ SUPERLOK	47.2	47.2	94.4		54.8
	S8		1/2″ SUPERLOK	49.8	49.8	99.6		54.0
	F4N		1/4″ FEMALE NPT	37.0	37.0	74.0		36.5
	F6N		3/8″ FEMALE NPT	38.0	38.0	76.0		40.0
	F8N		1/2″ FEMALE NPT	41.5	41.5	83.0		44.0
SBVH36023 & SBVH36023S	S10	12.7	5/8″ SUPERLOK	54.0	54.0	108.0	165	65.3
	S12		3/4″ SUPERLOK	54.0	54.0	108.0		65.3
	F8N		1/2″ FEMALE NPT	45.5	45.5	91.0		49.5
	F12N		3/4″ FEMALE NPT	51.0	51.0	102.0		55.0
SBVH36033 & SBVH36033S	S12	19.0	3/4″ SUPERLOK	61.9	61.9	123.8	165	69.8
	S16		1″ SUPERLOK	66.4	66.4	132.8		69.8
	F12N		3/4″ FEMALE NPT	59.0	59.0	118.0		56.5
	F16N		1″ FEMALE NPT	63.8	63.8	127.6		60.6

• All dimensions in millimeters unless specified as “inch”. Dimension are for reference only, subject to change.

Pressure & Temperature Rating

2-Way Straight

Valve Series	Materials			Pressure Rating @-54°C to 21°C (-65°F to 70°F)	Temperature Rating
	Seat	Stem Packing	End Connector Seal		
3601	PVDF	PTFE		6000psig (413bar)	-30°C to 130°C(-22°F to 265°F)
	PCTFE				-30°C to 150°C(-22°F to 355°F)
	PEEK			10000psig (689bar)	-54°C to 230°C(-65°F to 446°F)
3602 & 3603	PVDF			5000psig (344bar)	-23°C to 191°C(-10°F to 375°F)
	PCTFE				
	PEEK			6000psig (413bar)	

2-Way Angle & 3-Way

Valve Series	Materials			Pressure Rating @-54°C to 21°C (-65°F to 70°F)	Temperature Rating
	Seat	Stem Packing	End Connector Seal		
3601	PVDF	PTFE	VITON	4000psig(275bar)	-30°C to 130°C(-22°F to 265°F)
	PCTFE				-30°C to 150°C(-22°F to 355°F)
	PEEK			6000psig(413bar)	-54°C to 230°C(-65°F to 446°F)
3602 & 3603	PVDF			3000psig(206bar)	-23°C to 191°C(-10°F to 375°F)
	PCTFE			4000psig(275bar)	
	PEEK				

Ordering Information

Example : **SBVH3602 - S 12 - PE - SS**

1 2 3 4 5

1. Valve Series

2-Way straight	2-Way Angle	3-Way : Bottom Inlet Port	3-Way : Side Inlet Port
SBVH3601	SBVH3601A	SBVH36013	SBVH36013S
SBVH3602	SBVH3602A	SBVH36023	SBVH36023S
SBVH3603	SBVH3603A	SBVH36033	SBVH36033S

2. End Connection

S : SUPERLOK Tube Fitting

F : Female Thread

M : Male Thread

3. Connection Size

Tube O.D Designation

Tube O.D (inch)	1/4	3/8	1/2	5/8	3/4	1
Designation	4	6	8	10	12	16

Pipe Thread Designation

Size(inch)	1/4	3/8	1/2	3/4	1
Screwed NPT	4N	6N	8N	12N	16N
Screwed BSPT	4R	6R	8R	12R	12R

4. Seat Material Designator

BLANK : PCTFE(Standard)

PV : PVDF

PE: PEEK

5. Meterial Designator

SS(BLANK) : 316 Stainless Steel

M : ALLOY (Monel)

Key Operation Ball Valve

Introduction

- It can prevent various caused by inappropriate operations the unauthorized or unskilled persons in constructing, inspecting and running piping-work.
- It can prevent the accidents caused by inappropriate operations without permission or by intention in the places to come and go freely.

SBVL210 Series Low Pressure Key Operation Ball Valves

Features

- Locking handle in On and Off positions
- Compact design
- Low operating torques
- Variety of End connections

Specifications

- Pressure rating: 1000psig (69bar) @100 °F(38 °C)
- Body material: 316 stainless steel body
- Port Connections: 1/4" to 1" and 6mm to 25mm
- Orifice: 5.0mm to 16.0mm

Testing

- Each and every valve is tested with nitrogen at 1000psig (69bar).
- Valve have max allowable leak rate of 0.1 cm^3/min
- Shell testing is performed on demand.

Pressure-Temperature Rating

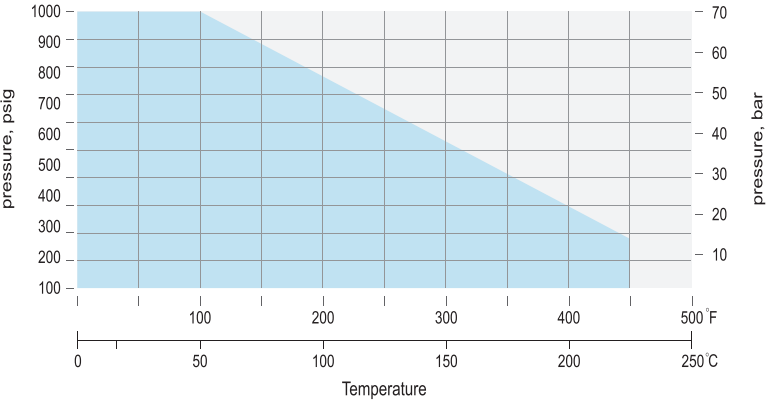

Materials of Construction

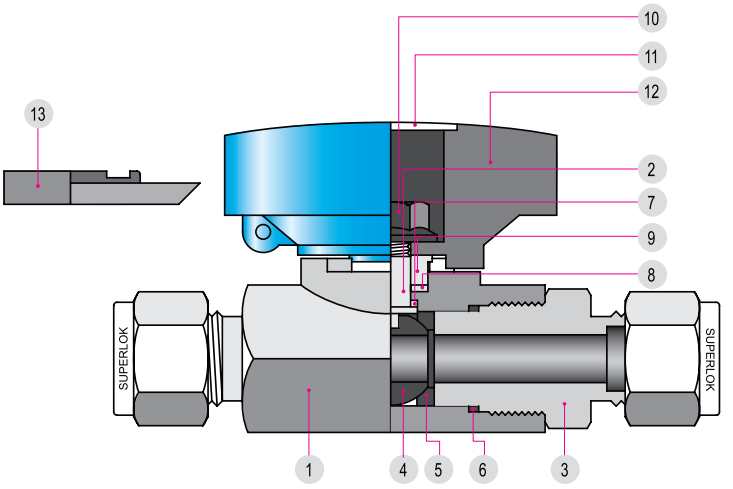

No.	Component	Material Grade ASTM Specification
*1	Body	A185-F316 / A276-316 / A351-CF8M
*2	Stem	A276-316
*3	End Connector	A276-316
*4	Ball	A276-316
*5	Ball Seal	PTFE
*6	Connector Seal	PTFE
*7	Lower Stem Seal	PTFE
*8	Upper Stem Seal	PTFE
*9	Stem Washer	A276-304
10	Nut	Stainless Steel
11	Handle Cap	Aluminum
12	Handle	Aluminum
13	Master Key	Zinc

- Wetted components are marked "*"

SBVL210 Series

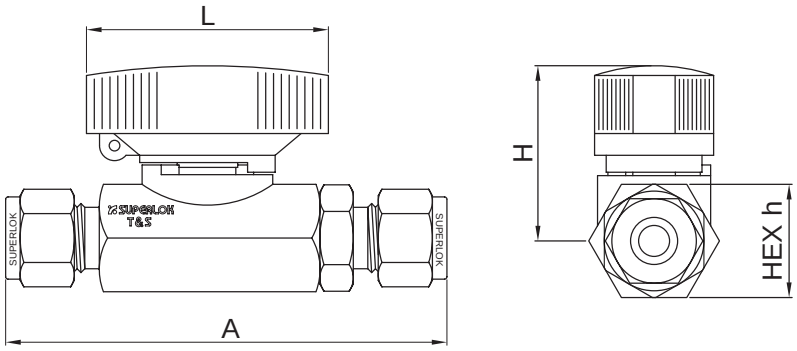

Table of dimensions

Part Number		Orifice	Cv	End Connection	Dimensions			
					h	A	H	L
SBVL 210	S6M	5.0	1.25	6mm SUPERLOK	18.0	79.8	32.3	42.0
	S4			1/4” SUPERLOK				
	S10M	7.0	2.5	10mm SUPERLOK	22.2	91.5	35.6	50.0
	S6			3/8” SUPERLOK				
	S12M	9.0	9.5	12mm SUPERLOK	27.0	101.4	37.6	50.0
	S8			1/2” SUPERLOK				
	S16M	12.5	12.7	16mm SUPERLOK	31.8	107.0	40.4	60.0
	S12			3/4” SUPERLOK				
	S25M	16.0	17.5	25mm SUPERLOK	38.1	131.0	43.5	60.0
	S16			1” SUPERLOK				

• Dimensions based on SUPERLOK nuts finger-tight.
• All dimensions in millimeters unless specified as “inch”. Dimension are for reference only, subject to change.

Ordering Information

Example : **SBVL 210 - S8 - RD - OT**

1 — 2 3 — 4 — 5

1. Valve Series

SBVL210

2. End Connection

S : SUPERLOK Tube Fitting
F : Female Thread
M : Male Thread

3. End Connection Size

Tube O.D Designation

Tube O.D (inch)	1/4	3/8	1/2	3/4	1
Designation	4	6	8	12	16
Tube O.D (inch)	6	10	12	16	25
Designation	6M	10M	12M	16M	25M

Pipe Thread Designation

Size (inch)	1/4	3/8	1/2	3/4	1
Screwed BSPT	4R	6R	8R	12R	16R
Screwed NPT	4N	6N	8N	12N	16N

4. Handle Color

Blank : Blue (Standard)
RD : Red
BK : Black

5. Valve Type

Blank : Standard Type
OT : Open Free Type
CT : Close Free Type

Key Operation Ball Valves

SBVL360 Series High Pressure Key Operation Ball Valves

Features

- Locking handle in On and Off positions
- High flow capacity in a compact design
- Low operating torques
- Positive handle stops
- Variety of End connections

Specifications

- Pressure rating: 6000psig (413bar) @70 °F(21 °C) with standard PCTFE seat
- Temperature rating: -65 to 350 °F (-54 to 177 °C) with standard PCTFE seat
- Body material: 316 stainless steel body
- Port connections: 1/4” to 3/4” and 6mm to 25mm

Testing

- Each and every valve is tested with nitrogen at 1000psig (69bar).
- Valve have max allowable leak rate of 0.1 cm^3/min
- Shell testing is performed on demand.

Materials of Construction

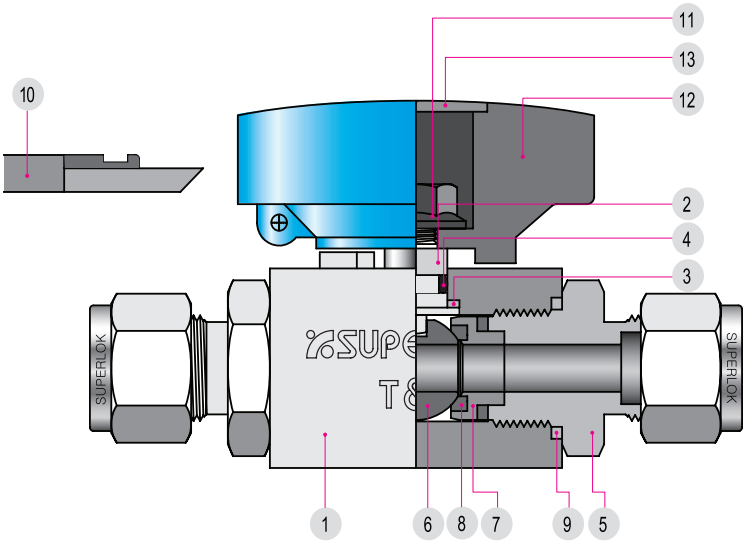

No.	Component	Material Grade ASTM Specification
*1	Body	A276-316 / A351-CF8M
*2	Stem	SS316 / A276
*3	Thrust Washer	PEEK
*4	O-Ring	NBR
*5	End Connector	A276-316
*6	Ball	A276-316
*7	Seal Retainer	A276-316
*8	Ball Seal	PCTFE
*9	Connector Seal	PTFE
10	Master Key	Zinc
11	Nut	Stainless Steel
12	Handle	Aluminum
13	Handle Cap	Aluminum

- Wetted components are marked “*”

SBVL360 Series

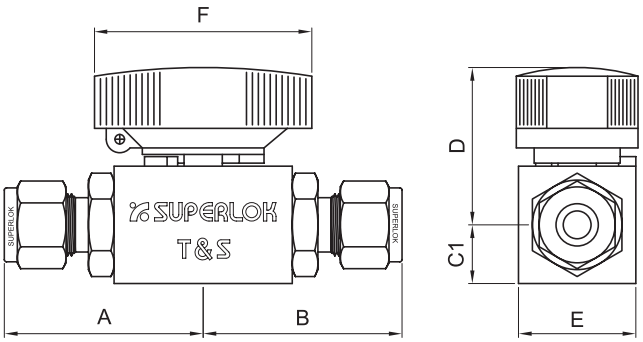

2 - way

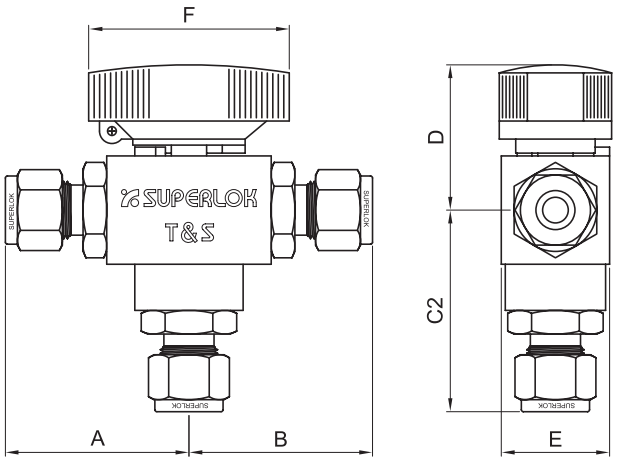

3 - way

Table of dimensions

Part Number		Orifice	Cv	End Connection	Dimensions						
					A	B	C1	C2	D	E	F
SBVL3601 or SBVL36013	S6M	4.8	1.04	6mm SUPERLOK	43.8	43.8	12.0	43.8	33.7	24.0	42.0
	S4			1/4″ SUPERLOK	43.8	43.8		43.8			
	F2N			1/8″ FEMALE NPT	34.0	34.0		34.0			
	M4N			1/4″ MALE NPT	40.2	40.2		40.2			
SBVL3602 or SBVL36023	S8M	6.4	2.34	8mm SUPERLOK	45.2	45.2	13.5	53.2	36.2	27.0	50.0
	S10M			10mm SUPERLOK	46.0	46.0		54.0			
	S6			3/8″ SUPERLOK	45.7	45.7		53.7			
	F4N			1/4″ FEMALE NPT	38.4	38.4		46.4			
	M4N			1/4″ MALE NPT	41.1	41.1		49.1			
	M6N			3/8″ MALE NPT	41.1	41.1		49.1			
SBVL3603 or SBVL36023	S12M	9.5	5.57	12mm SUPERLOK	59.2	59.2	16.0	69.2	41.5	32.0	60.0
	S16M	10.3	6.42	16mm SUPERLOK	59.2	59.2		69.2			
	S8			1/2″ SUPERLOK	59.4	59.4		69.4			
	S12			3/4″ SUPERLOK	59.2	59.2		69.2			
	F6N			3/8″ FEMALE NPT	49.5	49.5		59.5			
	F8N			1/2″ FEMALE NPT	54.6	54.6		64.6			
	M8N			1/2″ MALE NPT	56.4	56.4		66.4			

• Dimensions based on SUPERLOK nuts finger-tight.
• All dimensions in millimeters unless specified as “inch”. Dimension are for reference only, subject to change.

Technical Data

Temperature and Pressure Rating

Seat Material	Temperature Rating	Pressure Rating @ 100°F (38°C)		Pressure Rating @ Max. Temperature	
		Stainless Steel	Brass	Stainless Steel	Brass
PCTFE	-65 to 300°F (-54 to 148°C)	6000psig (413 bar)	3000psig (207 bar)	1000psig@300°F (68.9bar@148°C)	700psig@300°F (48bar@200°C)
PEEK	-65 to 450°F (-54 to 232°C)	6000psig (413 bar)	3000psig (207 bar)	700psig@400°F (48bar@200°C)	
PTFE	-65 to 300°F (-54 to 148°C)	1500psig (103 bar)	1500psig (103 bar)	250psig@300°F (17.2bar@148°C)	

Ordering Information

Example : **SBVL 3602 - S6 - PE - RD - OT**

1 2 3 4 5 6

1. Valve Series

2-Way	3-Way
SBVL3601	SBVL36013
SBVL3602	SBVL36023
SBVL3603	SBVL30233

2. End Connection

S : SUPERLOK Tube Fitting
F : Female Thread
M : Male Thread

3. End Connection Size

Tube O.D Designation

Tube O.D (inch)	1/4	3/8	1/2	3/4
Designation	4	6	8	12
Tube O.D (mm)	6	8	10	12
Designation	6M	10M	16M	16M

Pipe Thread Designation

Size (inch)	1/4	3/8	1/2	3/4
Screwed BSPT	4R	6R	8R	12R
Screwed NPT	4N	6N	8N	12N

4. Handle Color

Blank : PCTFE
PE : PEEK
PT : PTFE

5. Handle Color

Blank : Blue (Standard)
RD : Red
BK : Black

6. Valve Type

Blank : Standard Type
OT : Open Free Type
CT : Close Free Type
ST : Special Type

Valve Type

■ **Standard Type : Locking function works at both of the open & close end as a MASTER KEY is taken out from the handle.**
The MASTER KEY is needed all the way you turn on and off the valve.

■ **Open Free Type : Locking function works at the open end as a MASTER KEY is taken out from the handle.**
It is free to open the handle of valve without a MASTER KEY, but the handle will not move in the state of full open.
The MASTER KEY is needed as you start to close the valve. (It is very useful and available in the line where a fatal accident or serious damage can be broken out as the fluid of the line is blocked up.)

■ **Close Free Type : Locking function works at the close end as a MASTER KEY is taken out from the handle.**
It is free to close the handle of valve without a MASTER KEY, but the handle will not move in the state of full close.
The MASTER KEY is needed as you start to open the valve. (It is very useful and available in the line where a fatal accident or serious damage can be broken out as the valve is opened with permission or by intention.)

Ball Valve to DIN Standard

SBVD 370 Series

Features

- Pressure rating : 7200psig (500bar)
- Temperature rating : -20℃ to 100℃ with POM and NBR standard.
- Compact design with max orifice.
- Conforms to DIN standard.
- Each and every valves are tested at the factory.

Technical Data

Materials of Construction

Component	Specification			
	Valve Body Materials			
	SS316		Carbon Steel	
	ASTM	DIN	ASTM	DIN
Body End Connector Stem	A479 / SS316	17440 / 1.4571	A108 / 12L14	1651 / 9SMn28K
Ball	316 Stainless Steel			
Ball Seals	POM-MoS_2 (Standard)			
Stem & Connector Seals	NBR (Standard)			
Handle	SS316		Carbon Steel	
Locking Device	Stainless Steel			

Temperature Rating

Stem and Connector Seals

Materials	Temperature Rating
NBR	-30℃ to 100℃
Viton	-25℃ to 200℃
EPDM	-50℃ to 130℃

Ball Seals

Materials	Temperature Rating
POM - MoS_2	-30℃ to 100℃
PTFE	-54℃ to 232℃

Specification

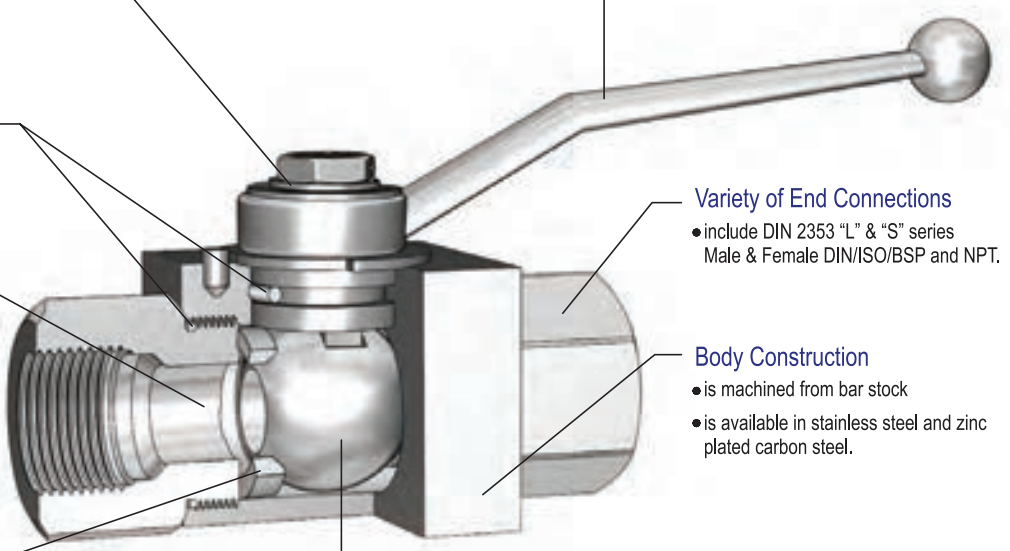

Locking Device
- is available as option

Indicator on Washer
- allows easy identification of flow direction

Stem & Connector Seals
- include NBR (standard), viton and EPDM(optional)

Orifice
- is maximized for minimal pressure drop
- ranges from DN 4 to DN 25.
- is available up to DN 80 upon request

Ball Seats
- are available in POM-MoS2 (standard) and PTFE (optional).

Handle
- is available in cast stainless steel (standard) and zinc plated carbon steel (optional).

Variety of End Connections
- include DIN 2353 “L” & “S” series Male & Female DIN/ISO/BSP and NPT.

Body Construction
- is machined from bar stock
- is available in stainless steel and zinc plated carbon steel.

Floating Ball
- is machined from bar stock
- is available in stainless steel and hard chrome plated carbon steel.

Table of Dimension

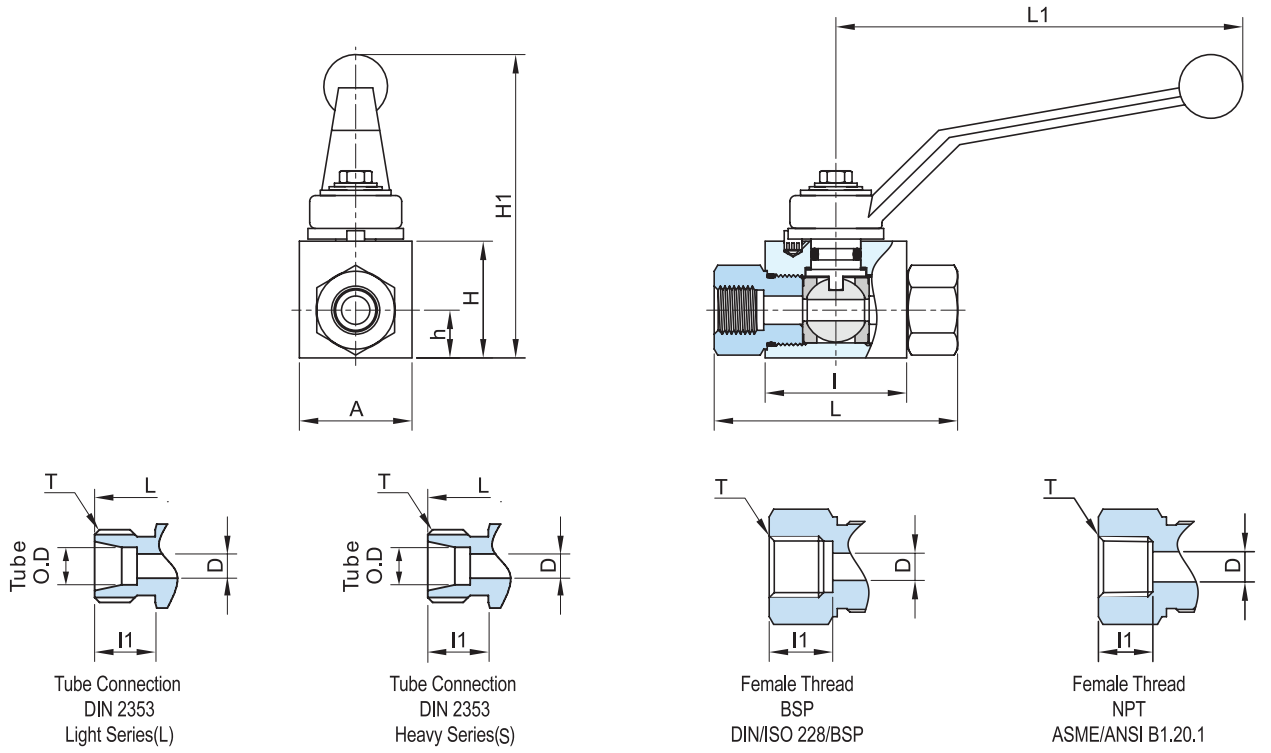

Table of Dimension

DIN 2353 Light Series (L)

Part Number		Tube O.D.	Max Orifice D	*PB	A	H	H1	h	l	l1	L	L1	Thread T
SBVD3701	D-06L	6	4	500	26	33	83	13.5	40	10	73	115	M12 x P1.5
	D-08L	8	6	500	26	33	83	13.5	40	10	73	115	M14 x P1.5
SBVD3702	D-10L	10	8	500	32	40	88	17.5	45	11	87	115	M16 x P1.5
	D-12L	12	10	500	32	40	88	17.5	45	11	87	115	M18 x P1.5
SBVD3703	D-15L	15	12	400	40	46	96	19.0	51	12	91	160	M22 x P1.5
	D-18L	18	15	400	40	46	96	19.0	51	12	91	160	M26 x P1.5
SBVD3704	D-22L	22	20	315	55	57	112	24.5	60	14	105	200	M30 x P2.0
	D-28L	28	25	315	58	65	120	29.5	70	14	118	200	M36 x P2.0
SBVD3705	D-35L	35	32	315	76	86	150	40.5	80	16	145	250	M45 x P2.0
	D-42L	42	38	315	100	103	170	50.0	85	16	150	250	M52 x P2.0

DIN 2353 Heavy Series (S)

Part Number		Tube O.D.	Max Orifice D	*PB	A	H	H1	h	l	l1	L	L1	Thread T
SBVD3701	D-08S	8	4	500	26	33	83	13.5	40	12	76	115	M16 x P1.5
	D-10S	10	6	500	26	33	83	13.5	40	12	76	115	M18 x P1.5
SBVD3702	D-12S	12	8	500	32	40	88	17.5	45	12	89	115	M20 x P1.5
	D-14S	14	10	500	32	40	88	17.5	45	14	93	115	M22 x P1.5
SBVD3703	D-16S	16	12	400	40	46	96	19.0	51	14	96	160	M24 x P1.5
	D-20S	20	15	400	40	46	96	19.0	51	16	100	160	M30 x P2.0
SBVD3704	D-25S	25	20	315	55	57	112	24.5	60	18	113	200	M36 x P2.0
	D-30S	30	25	315	58	65	120	29.5	70	20	130	200	M42 x P2.0
SBVD3705	D-38S	38	32	315	76	86	150	40.5	80	22	147	250	M52 x P2.0

Female DIN/ISO 228/BSP

Part Number		Max Orifice D	*PB	A	H	H1	h	l	l1	L	L1	Thread T
SBVD3701	F-2G	4	500	26	33	83	13.5	40	10.0	69	115	1/8″ PF
	F-4G	6	500	26	33	83	13.5	40	14.0	69	115	1/4″ PF
SBVD3702	F-6G	10	500	32	40	88	17.5	45	14.0	74	115	3/8″ PF
SBVD3703	F-8G	15(12)	400	40	46	96	19.0	51	16.5	83	160	1/2″ PF
	F-10G	15	400	40	46	96	19.0	51	16.0	83	160	5/8″ PF
SBVD3704	F-12G	20	315	55	57	112	24.5	60	18.0	95	200	3/4″ PF
	F-16G	25	315	58	65	120	29.5	70	20.0	113	200	1″ PF
SBVD3705	F-20G	32	315	76	86	150	40.5	80	22.0	120	250	1 1/4″ PF
	F-24G	38	315	100	103	170	50.0	85	24.0	130	250	1 1/2″ PF

Female NPT (ANSI/ASME B1.20.1)

Part Number		Max Orifice D	*PB	A	H	H1	h	l	l1	L	L1	Thread T
SBVD3701	F-2N	4	500	26	33	83	13.5	40	13.0	69	115	1/8″ NPT
	F-4N	6	500	26	33	83	13.5	40	17.0	69	115	1/4″ NPT
SBVD3702	F-6N	10	500	32	40	88	17.5	45	17.4	80	115	3/8″ NPT
SBVD3703	F-8N	15(12)	400	40	46	96	19.0	51	25.0	104	160	1/2″ NPT
	F-10N	15	400	40	46	96	19.0	51	25.0	104	160	5/8″ NPT
SBVD3704	F-12N	20	315	55	57	112	24.5	60	23.1	102	200	3/4″ NPT
	F-16N	25	315	58	65	120	29.5	70	27.8	119	200	1″ NPT
SBVD3705	F-20N	32	315	76	86	150	40.5	80	28.3	120	250	1 1/4″ NPT
	F-24N	38	315	100	103	170	50.0	85	28.0	130	250	1 1/2″ NPT

NOTE
* : PB in bar with a safety factor of 1.5.

• All dimensions in millimeters unless specified as “inch”. Dimension are for reference only, subject to change.

Trunnion Ball Valves

BT Series

Introduction

SUPERLOK High Pressure Ball Valves provide reliable shut-off or switching functions.
The upper and lower trunnion bearings enhance the resistance of the trunnions against seizure, and increase the valve life in extreme applications.
The compact and rugged design employs spring-loaded seats for high cycle life and low operating torques at pressures up to 10,000psig (689bar).

Features

- PEEK trunnion bearings for longer cycle life
- Two-way and three way designs
- Blow-out resistant two-piece ball/stem
- Low operating torque
- Panel mountable to 9.7mm thickness
- Handle indicates direction of flow
- Positive handle stops
- 100% factory tested
- Compact, maximum flow design

Specifications

Temperature rating	0˚F to 450˚F(-17˚C to 232˚C)
Body material	Stainless steel
Body configurations	Two-way and three-way
Pressure rating	10,000psig(689bar) with PEEK Seats
	6,000psig(414bar) with PCTFE Seats
Port connections	1/8″ to 1/2″ and 6mm to 12mm SUPERLOK Tube Fitting or Female NPT end connection

Materials of Construction

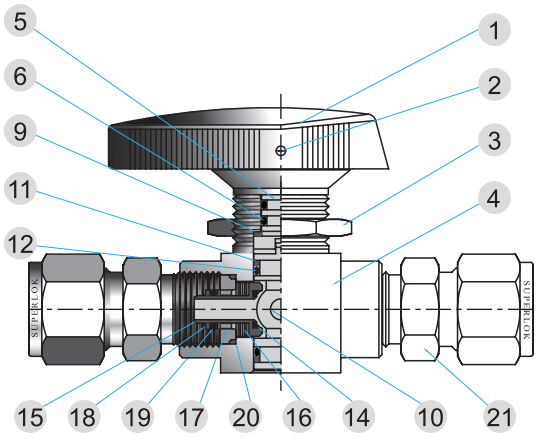

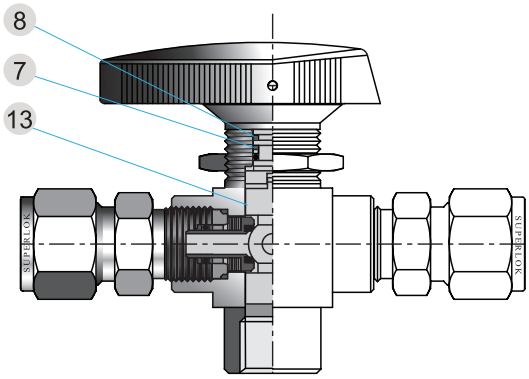

Component		BT Series (6,000psig)		BTH Series (10,000psig)	
		2-Way	3-Way	2-Way	3-Way
		Material Grade/ASTM Specification		Material Grade/ASTM Specification	
1	Handle	Phenolic with brass insert		Phenolic with brass insert	
2	Set screw	Stainless steel		Stainless steel	
3	Panel nut	SS316/A276		SS316/A276	
4	Body	SS316/A276		SS316/A276	
5	Stem	SS316/A276		SS316/A276	
6	Stem O-ring	Viton		Viton	
7	Stem backup ring 1	-	PEEK	PEEK	
8	Stem backup ring 2	-	PTFE	PTFE	
9	Stem bearing	PEEK		PEEK	
10	Trunnion ball	SS316/A276		SS316/A276	
11	Trunnion backup ring	R-PTFE	-	-	
12	Trunnion O-ring	Viton	-	-	
13	Trunnion bearing	-	PEEK	-	
14	Ball seat	PCTFE / PTFE / PEEK		PEEK	
15	Seat retainer	SS316/A276		SS316/A276	
16	Seat spring	Stainless steel		Stainless steel	
17	Seat guide	SS316/A276		SS316/A276	
18	Retainer backup ring	R-PTFE		R-PTFE	
19	Retainer o-ring	Viton		Viton	
20	Connection seal	PTFE		PTFE	
21	End Connection	SS316/A276		SS316/A276	

BT Series 2-Way

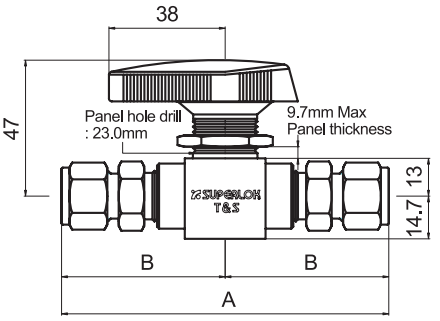

BT Series 3-Way

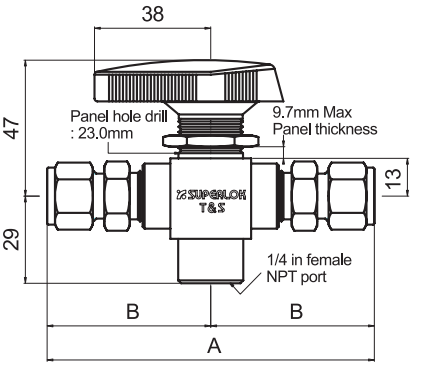

BTH Series 3-Way

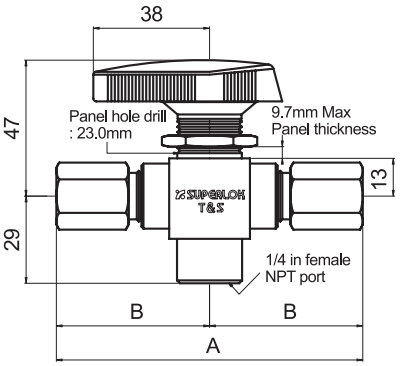

BT Series Order Number	BTH Series Order Number	End Connection Inlet & Outlet	CV	Dimensions A	Dimensions B
2 WAY VALVE ORIFICE : 4.8mm					
SBT2-F2N	SBTH2-F2N	1/8″ Female NPT	1.2	74.7	37.3
SBT2-F4N	-	1/4″ Female NPT	1.0	74.7	37.3
-	SBTH2-F4N	1/4″ Female NPT	1.0	99.8	50.0
SBT2-S4	SBTH2-S4	1/4″ SUPERLOK	1.6	105	52.6
SBT2-S6	SBTH2-S6	3/8″ SUPERLOK	1.4	112	55.6
SBT2-S8	SBTH2-S8	1/2″ SUPERLOK	1.0	117	58.4
SBT2-S6M	SBTH2-S6M	6mm SUPERLOK	1.6	105	52.6
SBT2-S8M	SBTH2-S8M	8mm SUPERLOK	1.5	105	52.6
SBT2-S10M	SBTH2-S10M	10mm SUPERLOK	1.3	112	55.9
SBT2-S12M	SBTH2-S12M	12mm SUPERLOK	1.0	117	58.4
3 WAY VALVE ORIFICE : 4.8mm					
SBT3-F2N	SBTH3-F2N	1/8″ Female NPT	0.75	74.7	37.3
SBT3-F4N	-	1/4″ Female NPT		74.7	37.3
-	SBTH3-F4N	1/4″ Female NPT		99.8	50.0
SBT3-S4	SBTH3-S4	1/4″ SUPERLOK		105	52.6
SBT3-S6	SBTH3-S6	3/8″ SUPERLOK		112	55.6
SBT3-S8	SBTH3-S8	1/2″ SUPERLOK		117	58.4
SBT3-S6M	SBTH3-S6M	6mm SUPERLOK		105	52.6
SBT3-S8M	SBTH3-S8M	8mm SUPERLOK		105	52.6
SBT3-S10M	SBTH3-S10M	10mm SUPERLOK		112	55.9
SBT3-S12M	SBTH3-S12M	12mm SUPERLOK		117	58.4

• Dimensions shown with SUPERLOK nuts finger-tight .
• All dimensions in millimeters unless specified as “inch”. Dimension are for reference only, subject to change.

Technical Data

Seat Material	Temperature Rating ˚F(˚C)	Pressure Rating at 100˚F(37˚C) psig (bar) Stainless Steel
BT Series		
PCTFE	0 to 250 (-17 to 121)	6000 (413)
PEEK	0 to 450 (-17 to 232)	
PTFE		1500 (103)
BTH Series		
PEEK	0 to 450 (-17 to 232)	6000 to 10,000 (413 to 689) depending on end connection

Pressure-Temperature Ratings

BT SERIES

Material		316SS		
Seat Material		PCTFE	PTFE	PEEK
Temperature ˚F(˚C)		Working Pressure, psig(bar)		
0(-17) to	100 (37)	6,000 (413)	1,500 (103)	6,000 (413)
	150 (65)	3,000 (206)	1,125 (77.5)	5,800 (399)
	200 (93)	2,000 (137)	750 (51.6)	5,000 (344)
	250 (121)	1,000 (68.9)	625 (43.0)	4,100 (282)
	300 (148)	-	500 (34.4)	3,200 (220)
	350 (176)	-	375 (25.8)	2,300 (158)
	400 (204)	-	250 (17.2)	1,400 (96.4)
	450 (232)	-	125 (8.6)	500 (34.4)

BTH SERIES

Material		316SS				
End Connections		F2, F4 S4, S6MM	S10MM	S6, S8MM	S8	S12MM
Temperature, ˚F(˚C)		Working Pressure, psig(bar)				
0(-17) to	100 (37)	10,000 (689)	8,400 (578)	7,500 (516)	6,700 (461)	6,600 (454)
	150 (65)	7,500 (516)	7,500 (516)	7,500 (516)	6,700 (461)	6,600 (454)
	200 (93)	5,000 (344)	5,000 (344)	5,000 (344)	5,000 (344)	5,000 (344)
	250 (121)	4,100 (282)	4,100 (282)	4,100 (282)	4,100 (282)	4,100 (282)
	300 (148)	3,200 (220)	3,200 (220)	3,200 (220)	3,200 (220)	3,200 (220)
	350 (176)	2,300 (158)	2,300 (158)	2,300 (158)	2,300 (158)	2,300 (158)
	400 (204)	1,400 (96.4)	1,400 (96.4)	1,400 (96.4)	1,400 (96.4)	1,400 (96.4)
	450 (232)	500 (34.4)	500 (34.4)	500 (34.4)	500 (34.4)	500 (34.4)

Testing

- Every valve is factory tested with nitrogen at 1000psig(68bar). Seats and body seals are required to have less than 0.1 SCCM leakage.
- Hydrostatic shell test is performed at 1.5 times the working pressure as an option.
- Optional testing is available upon requst.

Ordering informmation

Example :

SBT2	-	S	8M	-	PT
1		2	3		4

1. Valve Series
2. End Connection Type
3. Connection Size
4. Seat Material Designator (PT : PTFE, PC : PCTFE, PE : PEEK)

Nil : Standard Body Material (316 Stainless steel)

Swing - Out Ball Valves

SWB 320 Series & SWB 310 Series

SWB 320 Series

Specification

Pressure Rating up to 3000 psig (206 bar) at 100℉ (37℃) / Temperature Range from -20℉ (-28℃) to 450℉ (232℃)

Testing

Each valve is tested with nitrogen at 1000 psig (69 bar) to maximum allowable leak rate of 0.1 SCCM.
Hydrostatic shell test is performed at 1.5 times the working pressure.

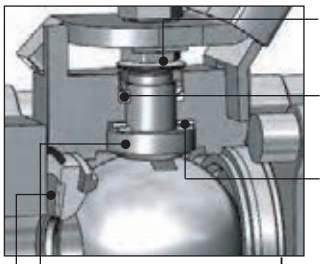

Stem
compensate for changes in pressure and temperature, and wear

Chevron Stem Packing
- low operating torque
- compensates for wear

High -Strength Stem Bearings
- provids smooth actuation
- eliminate galling between
- valve stem and body
- resist wear

Stem
provents stem blowout

Coned-Disc Spring

Seat
- compensates for wear, pressure and temperature change
- reduces seat wear from pressure surges

Precision Machind Ball
reduce torque increases sealing

Center Body
Swing-out design

Lever Handle
low operation torque

Locking Device Standard

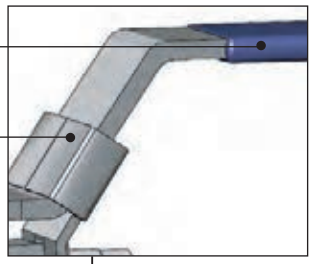

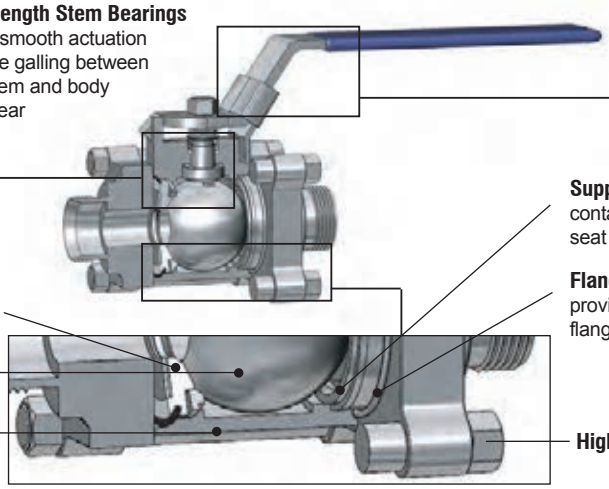

Support Ring
contains tie seat and proects against seat bulge, premature and deformation

Flange Seal
provides leakght seal beween flange and center body

High - Strength 4-Bolt & Nut

Materials of Construction

Component		Valve Body Materials Material / ASTM Specification	Q´TY
1	Body	CF8M / A351	1
2	Ball	CF8M / A351	1
3	Support Ring	SS316 / A276	2
4	Seats	Reinforced PTFE	2
5	Seat Spring	Strain Hardned 316 SS / A240	2
6	Flange Seal	PTFE	2
7	Flange	CF8M / A351	2
8	Stem	SS316 / A276	1
9	Stem Bearing	PEEK	1
10	Lower Packing	Reinforced PTFE	1
11	Upper Packing	Reinforced PTFE	1
12	Packing Support	SS316 / A276	1
13	Packing Gland	SS316 / A276	1
14	Stem Spring	Stainless Steel	3
15	Packing Nut	Stainless Steel	2
16	Handle	Stainless Steel	1
17	Locking Device	Stainless Steel	1
18	Flange Bolt	A193/B8M	4
19	Flange Nut	A194/8M	4

Pressure/Temperature Rating

Reinforced PTFE Seats (R-PTFE) : Standard

Series	Pressure - Temperature Rating	
	Temperature ℃ (℉)	Working Pressure psig (bar)
SWB 320	-20 to 100 (-28 to 37)	2200 (151)
	150 (65)	1850 (127)
	200 (93)	1500 (103)
	250 (121)	1150 (79.2)
	300 (148)	800 (55.1)
	350 (176)	560 (38.5)
	400 (204)	330 (22.7)
	450 (232)	100 (6.8)

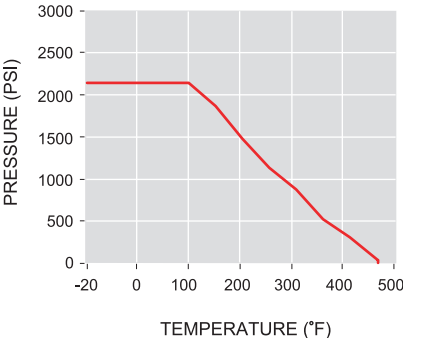

Carbon / Glass PTFE Seats : option

Series	Pressure - Temperature Rating	
	Temperature ℃ (℉)	Working Pressure psig (bar)
SWB 320	-20 to 100 (-28 to 37)	2500 (172)
	150 (65)	2430 (167)
	200 (93)	1870 (128)
	250 (121)	1620 (111)
	300 (148)	1240 (85.4)
	350 (176)	860 (59.2)
	400 (204)	480 (33.0)
	450 (232)	100 (6.8)

To order option item, add C to the end of ordering number.

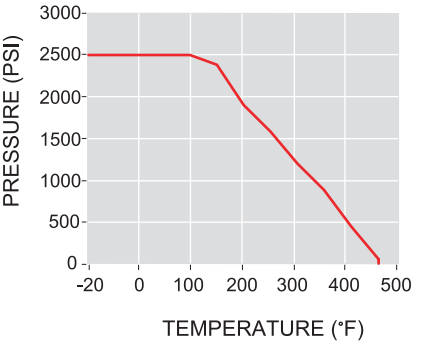

PEEK Seats : option

Series	Pressure - Temperature Rating	
	Temperature ℃ (℉)	Working Pressure psig (bar)
SWB 320	-20 to 100 (-28 to37)	3000 (206)
	150 (65)	2420 (166)
	200 (93)	1870 (128)
	250 (121)	1770 (121)
	300 (148)	1600 (110)
	350 (176)	1430 (98.5)
	400 (204)	1260 (86.8)
	450 (232)	800 (55.1)

To order option item, add P to the end of ordering number.

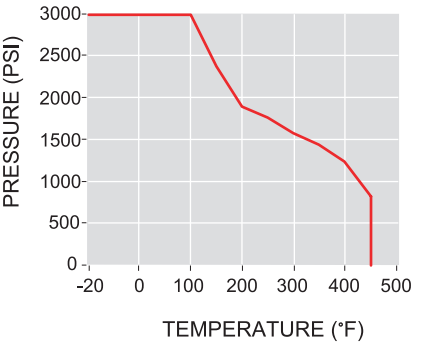

Virgin PTFE Seats : option

Series	Pressure - Temperature Rating	
	Temperature ℃ (℉)	Working Pressure psig (bar)
SWB 320	-20 to 100 (-28 to 37)	1500 (103)
	150 (65)	1500 (103)
	200 (93)	1500 (103)
	250 (121)	1150 (79.2)
	300 (148)	800 (55.1)
	350 (176)	560 (38.5)
	400 (204)	330 (22.7)
	450 (232)	100 (6.8)

To order option item, add V to the end of ordering number.

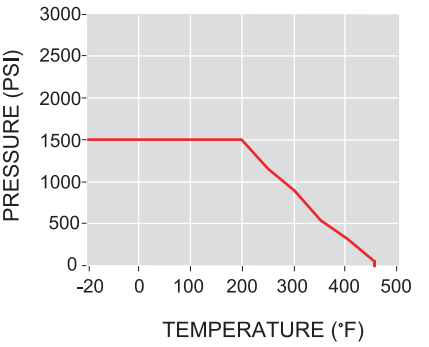

Table of Dimensions

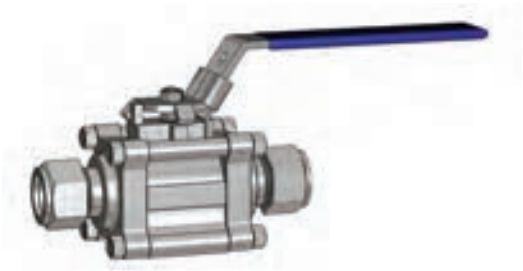

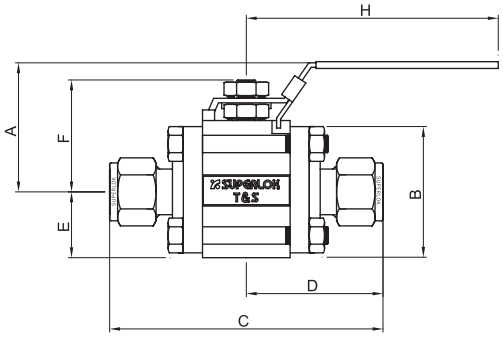

SUPERLOK Tube End Connection

Part Number		Orifice in.(mm)	Cv	End Connection	Dimension						
					A	B	C	D	E	F	H
SWB3201	S4	0.188 (4.8)	1.2	1/4 ″ Superlok	47.7	33.0	80.8	40.40	16.75	31.8	57.2
	S6	0.281 (7.1)	3.8	3/8 ″ Superlok							
	S6M	0.188 (4.8)	1.2	6mm Superlok							
	S8M	0.250 (6.4)	2.5	8mm Superlok							
	S10M	0.281 (7.1)	3.8	10mm Superlok							
SWB3202	S8	0.411 (10.4)	7.5	1/2 ″ Superlok	64.8	44.5	103.8	51.90	22.25	44.2	111.0
	S12	0.516 (13.1)	13.6	3/4 ″ Superlok							
	S12M	0.411 (10.4)	7.5	12mm Superlok							
SWB3203	S16	0.875 (22.2)	40.0	1 ″ Superlok	79.0	62.0	136.7	68.35	31.0	61.9	149.4
	S25M			25mm Superlok							
SWB3204	S24	1.250 (31.8)	100	1-1/2 ″ Superlok	102.0	77.7	192.6	96.3	38.9	79.8	232.0
SWB3205	S32	1.500 (38.1)	130	2 ″ Superlok	106.0	88.1	252.0	126.0	44.2	85.3	232.0

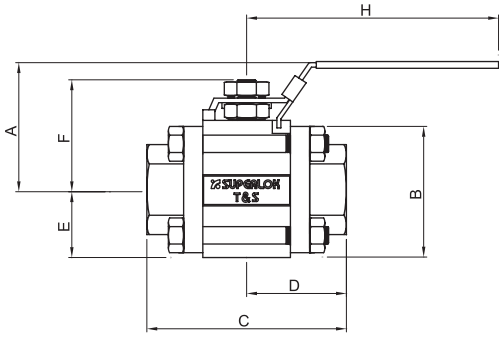

Female Pipe Thread End Connections

Part Number		Orifice in.(mm)	Cv	End Connection	Dimension						
					A	B	C	D	E	F	H
SWB3201	F2N	0.281 (7.1)	3.8	1/8 ″ Female NPT	47.7	33.0	55.4	27.70	16.75	31.8	57.2
	F4N			1/4 ″ Female NPT							
	F4R			1/4 ″ Female PT							
SWB3202	F6N	0.516 (13.1)	12.0	3/8 ″ Female NPT	64.8	44.5	68.9	34.45	22.25	44.2	111.0
	F8N			1/2 ″ Female NPT							
	F8R			1/2 ″ Female PT							
SWB3203	F12N	0.875 (22.2)	40.0	3/4 ″ Female NPT	79.0	62.0	92.0	46.0	31.0	61.9	149.4
	F16N			1 ″ Female NPT							
	F12R			3/4 ″ Female PT							
	F16R			1 ″ Female PT							
SWB3204	F20N	1.250 (31.8)	90	1-1/4 ″ Female NPT	102.0	77.7	112.2	55.6	38.9	79.8	232.0
	F24N		100	1-1/2 ″ Female NPT							
	F24R			1-1/2 ″ Female PT							
SWB3205	F32N	1.500 (38.1)	130	2 ″ Female NPT	106.0	88.1	125.4	62.7	44.2	85.3	232.0
	F32R			2 ″ Female PT							

• All dimensions in millimeters unless specified as “inch”. Dimension are for reference only, subject to change.

Table of Dimensions

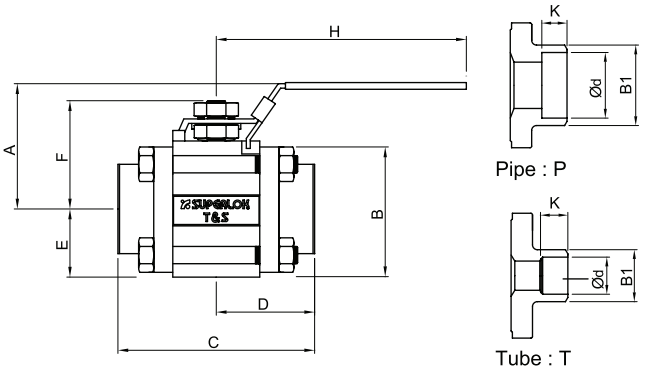

Socket weld end connections

Part Number		Orifice in.(mm)	Cv	End Connection	Dimension									
					ød	B1	A	B	C	D	E	F	H	K
SWB3201	SW4T	0.188 (4.8)	1.2	1/4 ″ Socket Weld	6.50	13.70	47.7	33.0	55.4	27.70	16.75	31.8	57.2	7.1
	SW6T	0.281 (7.1)	3.8	3/8 ″ Socket Weld	9.70	17.10								7.9
SWB3202	SW8T	0.411 (10.4)	7.5	1/2 ″ Socket Weld	12.90	21.30	64.8	44.5	68.9	34.45	22.25	44.2	111.0	9.7
	SW12T	0.516 (13.1)	13.6	3/4 ″ Socket Weld	19.20	26.70								11.2
	SW8P	0.516 (13.1)	15.0	1/2 ″ Socket Weld	21.80	31.20								9.7
SWB3203	SW16T	0.875 (22.2)	40.0	1 ″ Socket Weld	25.65	33.40	79.0	62.0	92.0	46.00	31.00	61.9	149.4	16.0
	SW12P		36.0	3/4 ″ Socket Weld	27.20	42.16								12.7
	SW16P		42.0	1 ″ Socket Weld	33.90	45.30								
SWB3204	SW20T	1.125 (28.6)	80.0	1-1/4 ″ Socket Weld	32.00	42.20	102.0	77.7	112.2	55.6	38.9	79.8	232.0	15.7
	SW24T	1.250 (31.8)	100.0	1-1/2 ″ Socket Weld	38.30	62.20								19.1
	SW20P		90.0	1-1/4 ″ Socket Weld	42.70				114.4	57.2				12.7
	SW24P		100.0	1-1/2 ″ Socket Weld	48.80				116.4	58.2				
SWB3205	SW32T	1.500 (38.1)	130.0	2 ″ Sokect Weld	51.10	70.10	106.0	88.1	125.4	62.7	44.2	85.3	232.0	19.1
	SW32P			2 ″ Sokect Weld	61.20	75.10		86.8			43.2			16.0

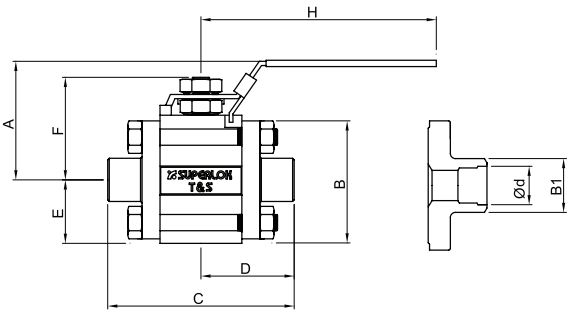

Butt weld end connections

Part Number		Schedule	Orifice in.(mm)	Cv	End Connection	Dimension								
						ød	B1	A	B	C	D	E	F	H
SWB3201	BW4P	10	0.188 (4.8)	1.2	1/4 ″ Butt Weld	10.40	13.70	47.7	33.0	52.4	26.20	16.75	31.8	57.2
SWB3202	BW8P		0.516 (13.1)	15.0	1/2 ″ Butt Weld	17.10	21.30	64.8	44.5	68.9	34.45	22.25	44.2	111.0
SWB3203	BW12P		0.875 (22.2)	36.0	3/4 ″ Butt Weld	22.45	26.67	79.0	62.0	92.0	46.00	31.0	61.9	149.4
SWB3203	BW16P			40.0	1 ″ Butt Weld	27.90	33.40			88.9	44.45			
SWB3201	BW4P	40	0.188 (4.8)	1.2	1/4 ″ Butt Weld	9.20	13.70	47.7	33.0	52.4	26.20	16.75	31.8	57.2
SWB3202	BW8P		0.516 (13.1)	15.0	1/2 ″ Butt Weld	15.80	21.30	64.8	44.5	68.9	34.45	22.25	44.2	111.0
SWB3203	BW12P		0.875 (22.2)	36.0	3/4 ″ Butt Weld	20.93	26.67	47.7	62.0	92.0	46.00	31.0	61.9	149.4
SWB3203	BW16P			40.0	1 ″ Butt Weld	26.60	33.40			88.9	44.45			
SWB3201	BW4P	80	0.188 (4.8)	1.2	1/4 ″ Butt Weld	7.70	13.70	79.0	33.0	52.4	26.20	16.75	31.8	57.2
SWB3201	BW6P		0.281 (7.1)	3.8	3/8 ″ Butt Weld	10.70	17.10							
SWB3202	BW8P		0.411 (10.4)	7.5	1/2 ″ Butt Weld	13.90	21.30	64.8	44.5	68.9	34.45	22.25	44.2	111.0
SWB3202	BW12P		0.516 (13.1)	13.6	3/4 ″ Butt Weld	18.80	26.70							
SWB3203	BW16P		0.875 (22.2)	40.0	1 ″ Butt Weld	23.90	33.40	79.0	62.0	88.9	44.45	31.00	61.9	149.4
SWB3204	BW24P	10	1.125 (28.6)	100	1-1/2 ″ Butt Weld	42.70	48.30	102.0	77.7	113.2	56.60	38.90	79.8	232.0
SWB3205	BW32P		1.500 (38.1)	130	2 ″ Butt Weld	54.80	60.30	106.0	88.1	121.4	60.70	44.20	85.3	
SWB3204	BW24P	40	1.125 (28.6)	100	1-1/2 ″ Butt Weld	40.90	48.30	102.0	77.7	113.2	56.60	38.90	79.8	232.0
SWB3205	BW32P		1.500 (38.1)	130	2 ″ Butt Weld	52.50	60.30	106.0	88.1	123.4	61.70	44.20	85.3	
SWB3204	BW24P	80	1.125 (28.6)	100	1-1/2 ″ Butt Weld	38.10	48.30	102.0	77.7	115.8	57.90	38.90	79.8	232.0
SWB3205	BW32P		1.500 (38.1)	130	2 ″ Butt Weld	49.30	60.30	106.0	88.1	129.6	64.80	44.20	85.3	

• All dimensions in millimeters unless specified as “inch”. Dimension are for reference only, subject to change.

SWB 310 Series

Specification

Pressure Rating up to 1000 psig (69 bar) at 100℉ (37℃)
Temperature Range from -20℉ (-28℃) to 450℉ (232℃)

Testing

Each valve is tested with nitrogen at 1000 psig (69 bar) to maximum allowable leak rate of 0.1 SCCM.
Hydrostatic shell test is performed at 1.5 times the working pressure.

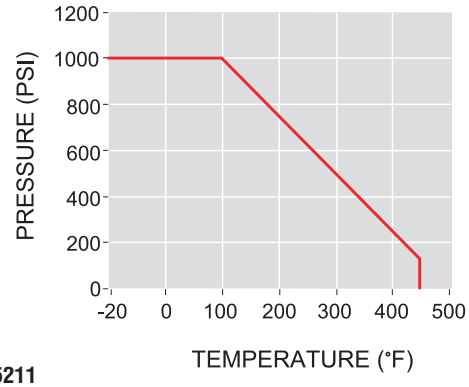

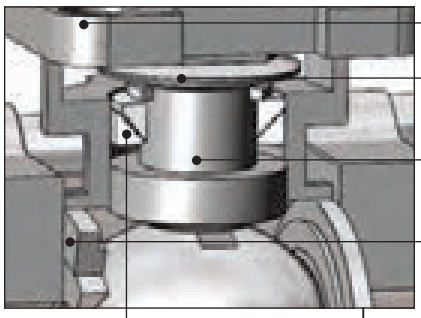

MACHWED MOUNTING PAD ACCORDING TO ISO 5211

STEM
compensate for changes in pressure and temperature, and wear

BLOW-OUT PROOF STEM
provides maximum safety

RELIFE SLOTS IN THE BALL SEAT
assist in downstream sealing reducing seat wear and operating torque

V-RING CHERON PACKING
improves seal and reduces operating torque

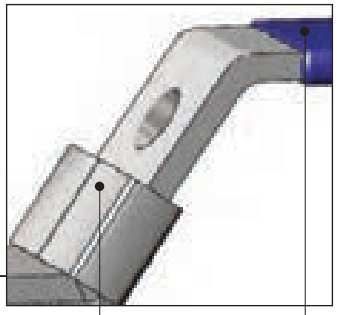

LEVER HANDLE

STANDARD LOCKINGL DEVICE

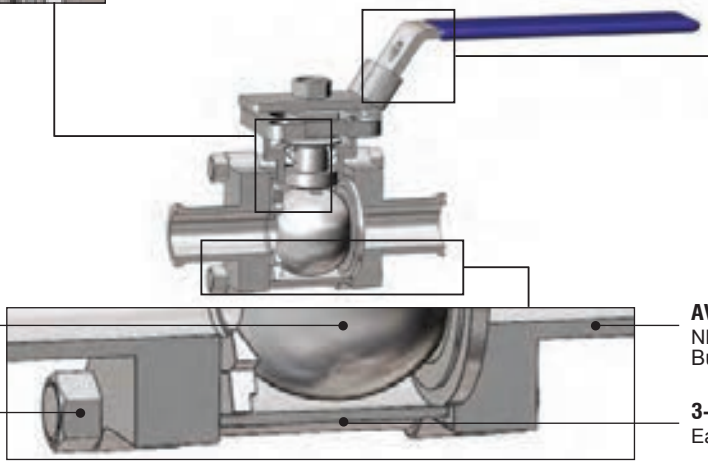

PLOATING BALL
Enables tight seat at all pressure

HIGH-STRENGTH 4-BOLT & NUT

AVAILABLE VARIOUS END CONNECTIONS
NPT, BSPT / Scoket Weld
Butt Weld / Sanitary

3-PIECE BODY SWING-OUT DESIGN
Easy in line maintenance

Materials of Construction

	Component	Materials	Q´TY
1	Body	ASTM A351GR/CF8M	1
2	End Cap	ASTM A351GR/CF8M	2
3	Ball	SS 316	1
4	Ball Seal	PTFE	2
5	Flange Seal	PTFE	2
6	Stem	SS316	1
7	Stem Seal	PTFE	1
8	Upper/Lower Packing	PTFE	1
9	Packing Gland	SS304	1
10	Handle Nut	STRAIN HARDNED 316	1
11	Disc Spring	SS304	2
12	Stem Nut	SS304	1
13	Handle	SS304	1
14	Locking Device	SS304	1
15	Stem Nut Lock	SS304	1
16	Flange Bolt	SS304	4
17	Flange Nut	SS304	4

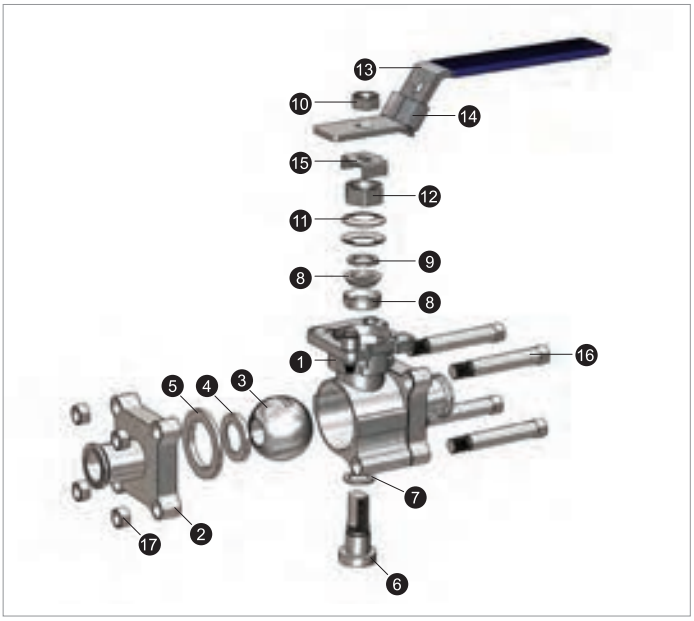

Table of Dimensions

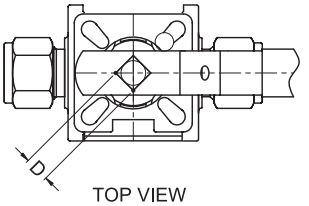

TOP VIEW

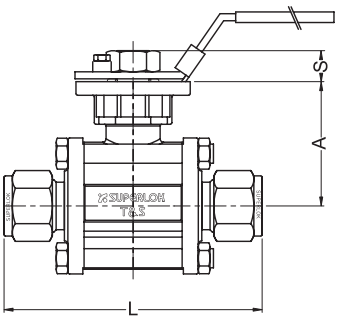

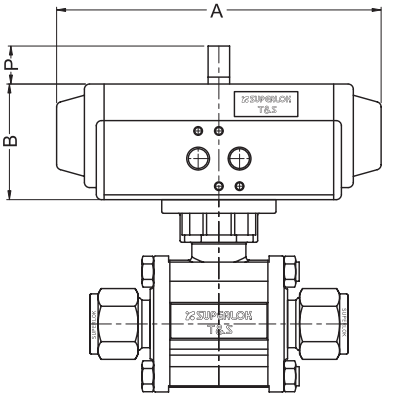

ROTATING PNEUMATIC ACTUATORS
(DOUBLE ACTING TYPE)

SUPERLOK Tube End Connection

Part Number		Size	Dimension						
			A	S	D	L	A1	B	P
SWB3101	S4	1/4 ″ SUPERLOK	39.0	8.5	9.0	72.6	188.0	67.0	20.0
	S6	3/8 ″ SUPERLOK				74.2			
	S8	1/2 ″ SUPERLOK				75.6			
	F4N(R)	1/4 ″ FEMALE NPT (PT)				63.5			
	F6N(R)	3/8 ″ FEMALE NPT (PT)							
	F8N(R)	1/2 ″ FEMALE NPT (PT)							
	SW4P	1/4 ″ SOCKET WELD							
	SW6P	3/8 ″ SOCKET WELD							
	SW8P	1/2 ″ SOCKET WELD							
	BW4P	1/4 ″ BUTT WELD				62.5			
	BW6P	3/8 ″ BUTT WELD							
	BW8P	1/2 ″ BUTT WELD				65.5			
	SA8	1/2 ″ SANITARY		9.0		89.0			
SWB3102	S12	3/4 ″ SUPERLOK	43.0	8.5	9.0	86.0	188.0	67.0	20.0
	F12N(R)	3/4 ″ FEMALE NPT (PT)				72.5			
	SW12P	3/4 ″ SOCKET WELD							
	BW12P	3/4 ″ BUTT WELD				76.2			
	SA12	3/4 ″ SANITARY		9.0		102.0			
SWB3103	S16	1 ″ SUPERLOK	53.0	11.4	9.0	104.0	188.0	67.0	20.0
	F16N(R)	1 ″ FEMALE NPT (PT)				81.0			
	SW16P	1 ″ SOCKET WELD							
	BW16P	1 ″ BUTT WELD				86.0			
	SA16	1 ″ SANITARY		11.0	11.0	124.0			
SWB3104	F24N(R)	1-1/2 ″ FEMALE NPT (PT)	70.0	14.0	11.0	104.0	234.0	86.0	20.0
	SW24P	1-1/2 ″ SOCKET WELD							
	BW24P	1-1/2 ″ BUTT WELD				119.0			
	SA24	1-1/2 ″ SANITARY			14.0	141.0			
SWB3105	F32N(R)	2 ″ FEMALE NPT (PT)	78.0	13.7	14.0	121.5	234.0	86.0	20.0
	SW32P	2 ″ SOCKET WELD							
	BW32P	2 ″ BUTT WELD				131.4			
	SA32	2 ″ SANITARY		14.0		162.0			

• All dimensions in millimeters unless specified as “inch”. Dimension are for reference only, subject to change.

Oval handle

Oval as an option. If require oval handle as option, add OH to the end of ordering number.

ex) SWB3202-S12-OH

Actuator

We can provide pneumatic actuation package as optional item with following features. If require actuator as option, add P(number) to the end of ordering number.

ex) SWB3202-F6N-P3

Ordering Information

Example : **SWB3202 - S 12 - PE - OH - SS**

1 2 3 4 5 6

1. Valve Series

SWB3201	SWB3101
SWB3202	SWB3102
SWB3203	SWB3103
SWB3204	SWB3104
SWB3205	SWB3105

2. Port Type

S : SUPERLOK Tube Fitting
M : Male Thread
F : Female Thread
SW : Socket Weld
BW : Butt Weld
SA : SANITARY

3. Port Size

Tube O.D Designation

Tube O.D (inch)	1/4	3/8	1/2	3/4	1	1-1/4	1-1/2	2
Designation	4	6	8	12	16	20	24	32
Tube O.D (mm)	6	8	10	12	20	25	32	38
Designation	6M	8M	10M	12M	20M	25M	32M	38M

Pipe Thread Designation

Size (inch)	1/8	1/4	3/8	1/2	3/4	1	1-1/4	1-1/2	2
Screwed BSPT	2R	4R	6R	8R	12R	16R	20R	24R	32R
Screwed NPT	2N	4N	6N	8N	12N	16N	20N	24N	32N

Socket Weld & Butt Weld Designation

Size (inch)	1/4	3/8	1/2	3/4	1	1-1/4	1-1/2	2
Tube	4T	6T	8T	12T	16T	20T	24T	32T
Pipe	4P	6P	8P	12P	16P	20P	24P	32P

4. Seat Material

BLANK : GLASS15% PTFE (T1)
PE : PEEK
PT : PTFE
T2 : GLASS25% PTFE
T3 : CARBON15% PTFE
T4 : CARBON25% PTFE

5. Option

OH : Oval Handle
Actuator
- P1 : Single Acting - 90° Turn
- P2 : Single Acting - 180° Turn
- P3 : Double Acting - 90° Turn
- P4 : Double Acting - 180° Turn

6. Body Material

SS : 316 Stainless Steel

Examples

ex1) SWB3103 - SA16 - SS
SWB3103 Series / [Port1]SANITARY x [Port2]SANITARY / Port Size: 1" x 1"
Seat Material: R-PTFE / Body Material: 316 Stainless Steel

ex2) SWB3201 - S6 - T4 - SS
SWB3201 Series / [Port1]SUPERLOK x [Port2]SUPERLOK / Port Size: 3/8" x 3/8"
Seat Material: Carbon PTFE / Body Material: 316 Stainless Steel

Forged High Pressure Ball Valves

SBVF360 Series

Features

- Compact design
- Low operating torques
- Panel mountable
- Floating ball design
- Two-way and Three way types
- Handle direction indicates flow direction

Specifications

Temperature Ratings	316 Stainless Steel	: -65°F to 1200°F (-53°C to 648°C)
	PCTFE	: -65°F to 200°F (-53°C to 93°C)
	PTFE	: -65°F to 350°F (-53°C to 177°C)
	PEEK	: -65°F to 450°F (-53°C to 232°C)
	NBR	: -40°F to 250°F (-40°C to 120°C)
	VITON	: -15°F to 450°F (-26°C to 232°C)
Orifice Size	From 0.086" to 0.406" (2.2mm to 10.3mm)	
Flow Coefficients (Cv)	From 0.18 to 6.42	
End Connection Size	From 1/8" to 3/4" , 3mm to 16mm	
Pressure Ratings at 100°F(37°C)	316 Stainless Steel	: 6000 psig (413 bar)
	BRASS	: 3000 psig (207 bar)

Testing

- Each and every valve is tested with nitrogen at 1000psig (69bar).
- Valve have max allowable leak rate of 0.1 cm^3/min.
- Shell testing is performed on demand.

Materials of Construction

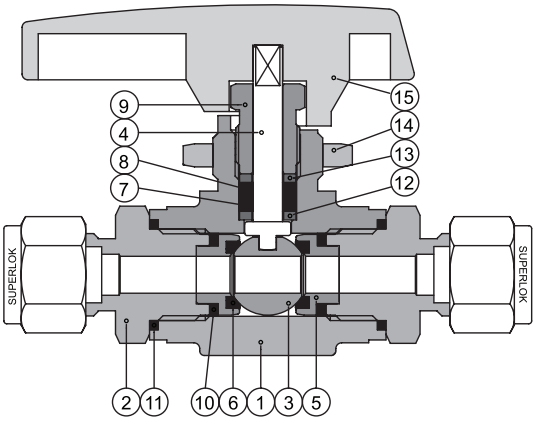

Component		Material Grade / ASTM Specification	
		Stainless Steel	Brass
*1	Body	ASTM A182-F316	ASTM B283
*2	End Connector	ASTM A276-316	ASTM B16
*3	Ball	ASTM A276-316	
*4	Stem	ASTM A276-316	
*5	Seal Retainer	ASTM A276-316	
*6	Seat	Standard PCTFE (PTFE,PEEK)	
*7	Lower Packing	PTFE	
*8	Upper Packing	PTFE	
9	Packing Bolt	ASTM A276-316	
*10	O - Ring	VITON	
*11	Connector Seal	PTFE	
*12	Thrust Washer	PEEK	
13	Stem Washer	ASTM A276-316	
14	Panel Nut	ASTM A276-316	
15	Handle	Aluminum	

Wetted components are marked ""

SBVF Series

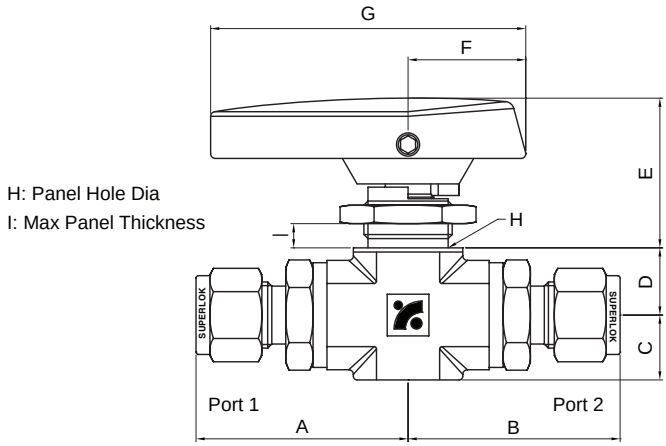

Two - Way Type

Table of dimensions

Part Number		Orifice In.(mm)	Cv	End Connections Port1 / Port2	Dimensions								
					A	B	C	D	E	F	G	H	I
SBVF 3601	S2	0.093(2.4)	0.21	1/8" SUPERLOK	34.5	34.5	10.0	10.5	23.5	18.0	47.0	16.3	3.3
	S4	0.165(4.2)	0.93	1/4" SUPERLOK	37.6	37.6							
	S3M	0.086(2.2)	0.18	3mm SUPERLOK	34.8	34.8							
	M2N	0.165(4.2)	0.93	1/8" MALE NPT	29.9	29.9							
	M4N	0.165(4.2)	0.93	1/4" MALE NPT	34.3	34.3							
	F2N	0.165(4.2)	0.93	1/8" FEMALE NPT	27.2	27.2							
SBVF 3602	S4	0.189(4.8)	1.04	1/4" SUPERLOK	44.2	44.2	14.0	14.5	32.3	25.4	68.0	19.6	6.4
	S6	0.250(6.4)	2.34	3/8" SUPERLOK	45.8	45.8							
	S6M	0.189(4.8)	1.04	6mm SUPERLOK	44.5	44.5							
	S8M	0.250(6.4)	2.34	8mm SUPERLOK	45.2	45.2							
	S10M	0.250(6.4)	2.34	10mm SUPERLOK	46.0	46.0							
	M4N	0.250(6.4)	2.34	1/4" MALE NPT	41.1	41.1							
	M6N	0.250(6.4)	2.34	3/8" MALE NPT	41.1	41.1							
	F4N	0.250(6.4)	2.34	1/4" FEMALE NPT	38.4	38.4							
SBVF 3603	S8	0.406(10.3)	6.42	1/2" SUPERLOK	59.4	59.4	17.5	19.3	41.1	27.7	74.2	22.9	9.7
	S12	0.406(10.3)	6.42	3/4" SUPERLOK	59.2	59.2							
	S12M	0.375(9.5)	5.57	12mm SUPERLOK	59.2	59.2							
	S16M	0.406(10.3)	6.42	16mm SUPERLOK	59.2	59.2							
	M8N	0.406(10.3)	6.42	1/2" MALE NPT	56.4	56.4							
	F6N	0.406(10.3)	6.42	3/8" FEMALE NPT	49.5	49.5							
	F8N	0.406(10.3)	6.42	1/2" FEMALE NPT	54.6	54.6							

- Dimensions based on SUPERLOK nuts finger-tight.
- ISO Tapered Threads are available upon request
- All dimensions in millimeters unless specified as “inch”. Dimension are for reference only, subject to change.

SBVF 3 Series

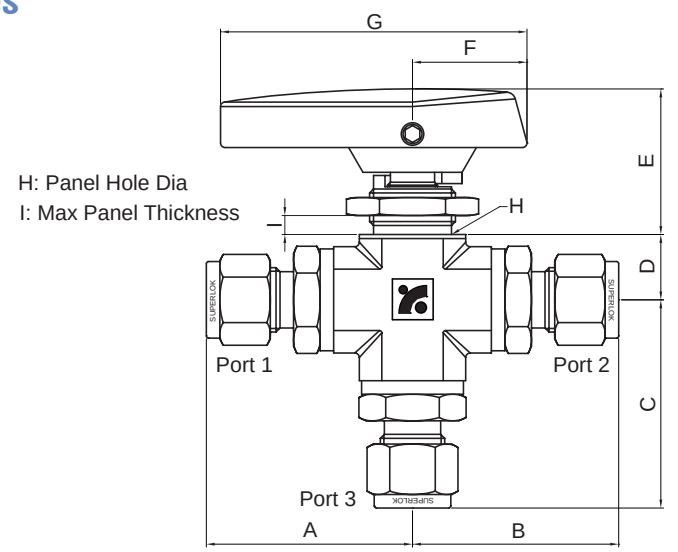

Pressure Ratings with port3 as inlet :
Please see Specifications of page 300

Pressure Rating with port 1 or port 2 as inlet :
150 psig (10bar) at 100°F(37°C)

Table of dimensions

Part Number		Orifice In.(mm)	Cv	End Connections Port1 / Port2 / Port3	Dimensions								
					A	B	C	D	E	F	G	H	I
SBVF 36013	S2	0.093(2.4)	0.21	1/8" SUPERLOK	34.5	34.5	36.5	10.5	23.5	18.0	47.0	16.3	3.3
	S4	0.165(4.2)	0.63	1/4" SUPERLOK	37.6	37.6	39.6						
	S3M	0.086(2.2)	0.18	3mm SUPERLOK	34.8	34.8	36.8						
	M2N	0.165(4.2)	0.63	1/8" MALE NPT	29.9	29.9	31.9						
	M4N	0.165(4.2)	0.63	1/4" MALE NPT	34.3	34.3	36.3						
	F2N	0.165(4.2)	0.63	1/8" FEMALE NPT	27.2	27.2	29.2						
SBVF 36023	S4	0.189(4.8)	0.70	1/4" SUPERLOK	44.2	44.2	47.7	14.5	32.3	25.4	68.0	19.6	6.4
	S6	0.250(6.4)	0.87	3/8" SUPERLOK	45.8	45.8	49.3						
	S6M	0.189(4.8)	0.70	6mm SUPERLOK	44.5	44.5	48.0						
	S8M	0.250(6.4)	0.87	8mm SUPERLOK	45.2	45.2	48.7						
	S10M	0.250(6.4)	0.87	10mm SUPERLOK	46.0	46.0	49.5						
	M4N	0.250(6.4)	0.87	1/4" MALE NPT	41.1	41.1	44.6						
	M6N	0.250(6.4)	0.87	3/8" MALE NPT	41.1	41.1	44.6						
	F4N	0.250(6.4)	0.87	1/4" FEMALE NPT	38.4	38.4	41.9						
SBVF 36033	S8	0.406(10.3)	3.62	1/2" SUPERLOK	59.4	59.4	68.1	19.3	41.1	27.7	74.2	22.9	9.7
	S12	0.406(10.3)	3.62	3/4" SUPERLOK	59.2	59.2	67.9						
	S12M	0.375(9.5)	3.46	12mm SUPERLOK	59.2	59.2	67.9						
	S16M	0.406(10.3)	3.62	16mm SUPERLOK	59.2	59.2	67.9						
	M8N	0.406(10.3)	3.62	1/2" MALE NPT	56.4	56.4	65.1						
	F6N	0.406(10.3)	3.62	3/8" FEMALE NPT	49.5	49.5	58.2						
	F8N	0.406(10.3)	3.62	1/2" FEMALE NPT	54.6	54.6	63.3						

- Dimensions based on SUPERLOK nuts finger-tight.
- ISO Tapered Threads are available upon request
- All dimensions in millimeters unless specified as “inch”. Dimension are for reference only, subject to change.

Technical Data

Flow Rate with 1000psig (69bar) Inlet Pressure

Two - Way

Cv	Pressure Drop ΔP , psig (bar)			Pressure Drop ΔP , psig (bar)		
	10 (0.7)	50 (3.5)	100 (6.9)	10 (0.7)	50 (3.5)	100 (6.9)
	Water Flow @ 60°F (16°C) , gpm (m^3/hr)			Air Flow @ 60°F (16°C) , scfm (m^3/hr)		
0.93	2.9 (0.7)	6.6 (1.5)	9.3 (2.1)	92.4 (156.2)	200.3 (338.3)	272.0 (458.9)
2.34	7.4 (1.7)	16.5 (3.8)	23.4 (5.3)	231.7 (391.5)	494.2 (834.7)	657.0 (1107.9)
6.42	20.3 (4.6)	45.4 (10.3)	64.2 (14.6)	637.1 (1076.8)	1373.6 (2320.3)	1852.3 (3124.8)

Three - Way

Cv	Pressure Drop ΔP , psig (bar)			Pressure Drop ΔP , psig (bar)		
	10 (0.7)	50 (3.5)	100 (6.9)	10 (0.7)	50 (3.5)	100 (6.9)
	Water Flow @ 60°F (16°C) , gpm (m^3/hr)			Air Flow @ 60°F (16°C) , scfm (m^3/hr)		
0.63	2.0 (0.5)	4.5 (1.0)	6.3 (1.4)	62.7 (106.0)	137.1 (231.7)	188.4 (317.9)
0.87	2.8 (0.6)	6.2 (1.4)	8.7 (2.0)	86.7 (146.6)	190.5 (321.8)	263.2 (444.4)
3.62	11.5 (2.6)	25.6 (5.9)	36.2 (8.2)	360.6 (609.5)	789.7 (1343.5)	1087.4 (1836.6)

Ordering Information

Example : **SBVF3602 - M6N - S6 - PE - SS**

1 2 3 2 3 4 5

1. Valve Series

Two - Way	Three - Way
SBVF3601	SBVF36013
SBVF3602	SBVF36023
SBVF3603	SBVF36033

2. Port Type

S : SUPERLOK Tube Fitting
M : Male Pipe Thread
F : Female Pipe Thread

3. Port Size

Tube O.D Designation

Tube O.D (inch)	1/16	1/8	1/4	3/8	1/2	3/4
Designation	1	2	4	6	8	12
Tube O.D (mm)	3	6	8	10	12	16
Designation	3M	6M	8M	10M	12M	16M

Pipe Thread Designation

Size (inch)	1/8	1/4	3/8	1/2	3/4
Screwed NPT	2N	4N	6N	8N	12N
Screwed BSPT	2R	4R	6R	8R	12R

4. Seat Material

Blank : PCTFE
PE : PEEK

5. Body Material

SS : 316 Stainless Steel
B : Brass

Examples

ex1) SBVF3602 - S6 - B
2-Way valve / Port1: SUPERLOK 3/8" / Port2: SUPERLOK 3/8" / PCTFE Seat / Brass body

ex2) SBVF36023 - S6 - PE - SS
3-Way valve / Port1, 2, 3: SUPERLOK 3/8" / PEEK Seat / 316 Stainless steel body

ex3) SBVF36023 - S6 - F4N - SS
3-Way valve / Port1, 2: SUPERLOK 3/8" / Port 3: 1/4" NPT Female / PCTFE Seat / 316 Stainless steel body

ex3) SBVF36023 - S4 - S6 - F4N - SS
3-Way valve / Port 1: SUPERLOK 1/4" / Port 2: SUPERLOK 3/8" / Port 3: 1/4" NPT Female / PCTFE Seat / 316 Stainless steel body

Ball Valve Series

www.sks-online.com

SUPERLOK®

Flanged Ball Valves

Forged Steel & Cast Steel Floating Ball Valve Series

Trunnion Mounted Ball Valve Series

www.superlok.com

Floating Ball Valve - Design Features

Mounting and Stem Seal Design

Actuator Mounting (ISO-5211)

Flanged end products shall have an integrally cast actuator mounting pad. This feature provides for direct mount of gear operators or actuators. The additional cost for a separate mounting bracket is eliminated.

Live load stem seal

The combination of stem packing and O-rings guarantee zero emissions even at low pressure. The primary seal is made out of flexible graphite , a material with extremely good resistance to fire conditions.
The anti blow out stem is inserted from inside the valve body.

Anti-Static Design

Ball valves present a particular problem with the build up of static electricity around the ball.
Ball valves have anti-static devices which provides contact between stem and ball, and stem and body to eliminate static electricity.

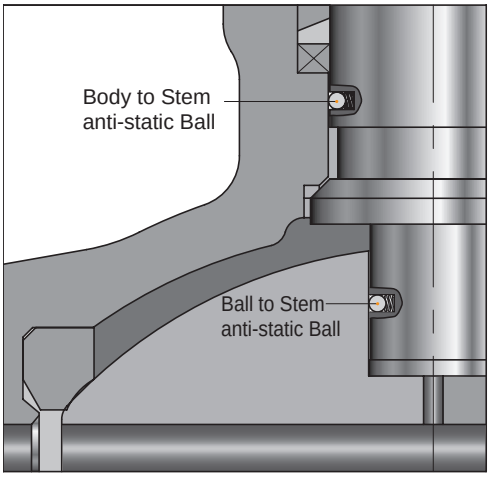

Unibody Ball Valve Design

The PTFE gasket packing acts as a primary seal for the Unibody ball valves. The secondary seal has been made out of flexible graphite, a material with extremely good resistance to fire conditions.

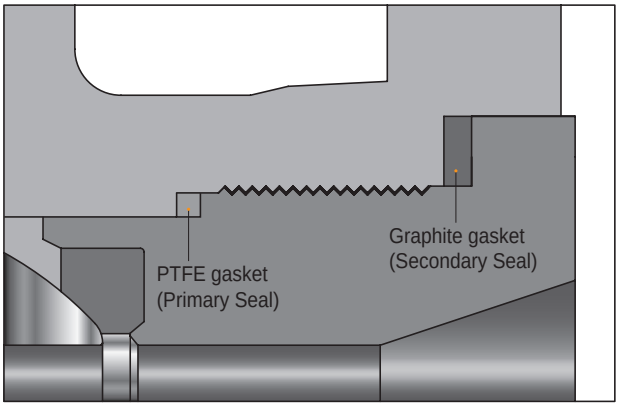

Fire Safe Design

In the event of a fire the valve is required to make a downstream seal.
Even after the disintegration of the RTFE seats, BMT ball valves have an excellent metal to metal seal.
Special attention has been paid to the mechanical strength and sealing efficiency of the central flanged joint in the valve body.

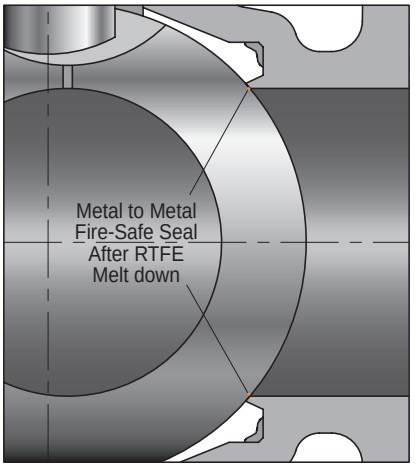

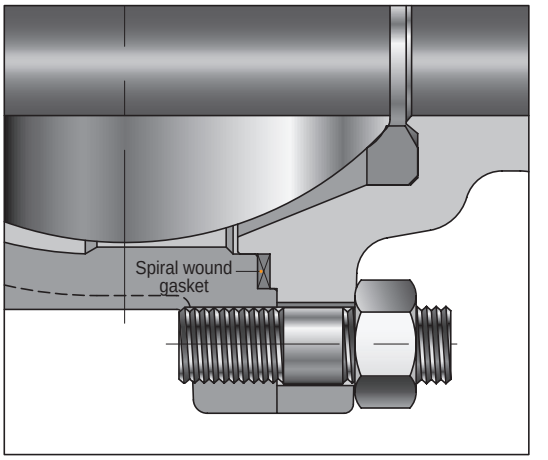

1Piece Body Cast Floating Ball Valve

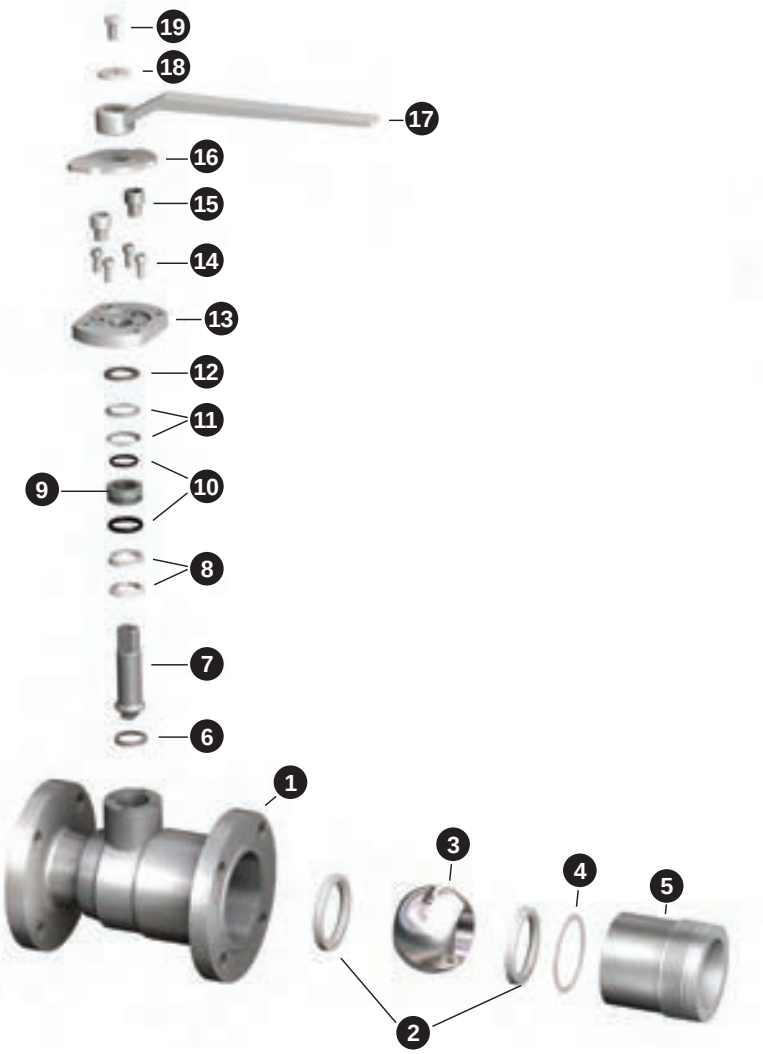

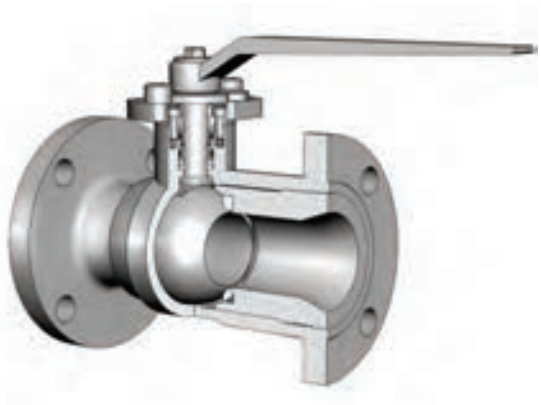

Features

Size : 1/2″ ~ 6″
Class : 150 ~ 300
One Piece Cast Steel Body
Floating Ball, Reduced Bore
Anti-Static Device
Blow-out Proof Stem
Fire Safe Design

Specifications

Design	ASME B16.34 / API 608
Face to Face	ASME B16.10
End Flange	ASME B16.5
Test	API 598
Fire Safe Test	API607 / API 6FA
Special	NACE MR - 01 - 75

Material of Specifications

NO.	COMPONENT	MATERIAL	
		STAINLESS STEEL	CARBON STEEL
1	BODY	ASTM A351-CF8M	ASTM A216-WCB
2	SEAT	PTFE	PTFE
3	BALL	ASTM A351 CF8M	ASTM A351 CF8M
4	INSERT SEAL	PTFE/GRAPHITE	PTFE/GRAPHITE
5	INSERT	ASTM A351-CF8M	ASTM A216-WCB
6	THRUST WASHER	PEEK	PEEK
7	STEM	ASTM A479-TP316	ASTM A276-TP316
8	PACKING	PTFE/GRAPHITE	PTFE/GRAPHITE
9	STEM SEAL RETAINER	ASTM A276-TP316	ASTM A276-TP316
10	O-RING	VITON	VITON
11	DISC SPRING	STAINLESS STEEL	STAINLESS STEEL
12	GLAND	ASTM A276-TP316	ASTM A276-TP316
13	GLAND FLANGE	ASTM A351-CF8M	ASTM A216-WCB
14	FLANGE BOLT	ASTM A193-B8	ASTM A193-B7
15	STOPPER BOLT	ASTM A193-B8	ASTM A193-B7
16	STOPPER	STAINLESS STEEL	CARBON STEEL
17	HANDLE	STAINLESS STEEL	CARBON STEEL
18	PLAIN WASHER	ASTM A240-TP304	ASTM A240-TP304
19	HANDLE BOLT	ASTM-A193-B8	ASTM A307-B

Dimensions and Weights

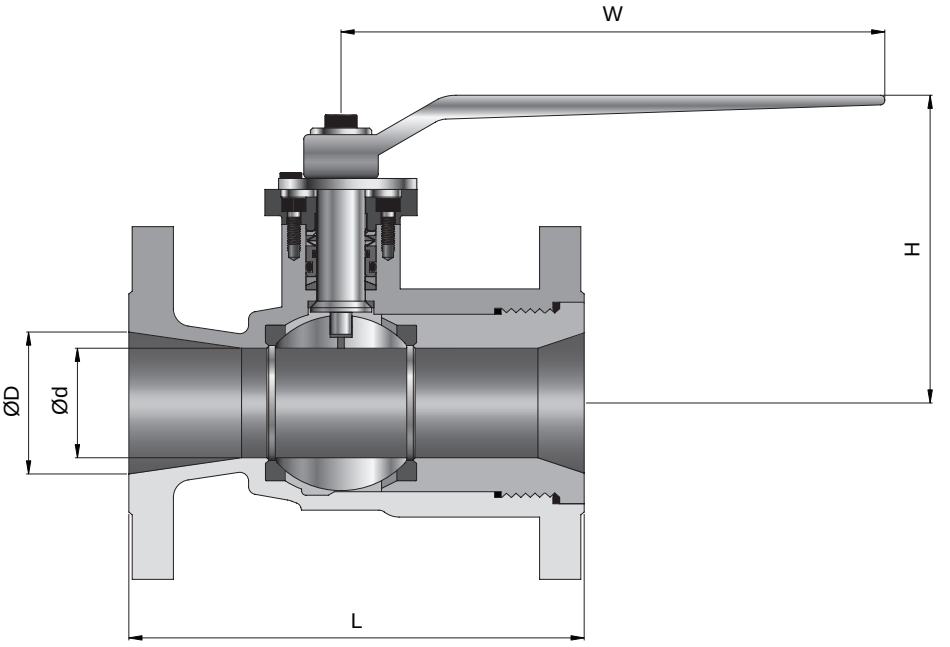

Class150

Size(inch)	Ød	ØD	L	H	W	Weight(Kg)
1/2	10	15	108	78	150	1.6
3/4	15	20	117	80	150	2.5
1	20	25	127	98	220	3
1-1/2	25	38	165	118	250	6
2	38	50	178	133	250	9
3	65	76	203	156	250	16
4	76	100	229	194	350	27.5
6	100	152	394	209	460	50

Class300

Size(inch)	Ød	ØD	L	H	W	Weight(Kg)
1/2	10	15	140	78	150	2.5
3/4	15	20	152	80	150	4.2
1	20	25	165	98	220	4.8
1-1/2	25	38	191	118	250	8.6
2	38	50	216	133	250	11.5
3	65	76	283	156	250	23.5
4	76	100	305	194	350	39
6	100	152	403	209	460	65

• All dimensions in millimeters unless specified as “inch”. Dimension are for reference only, subject to change.

2Piece Body Cast Floating Ball Valve

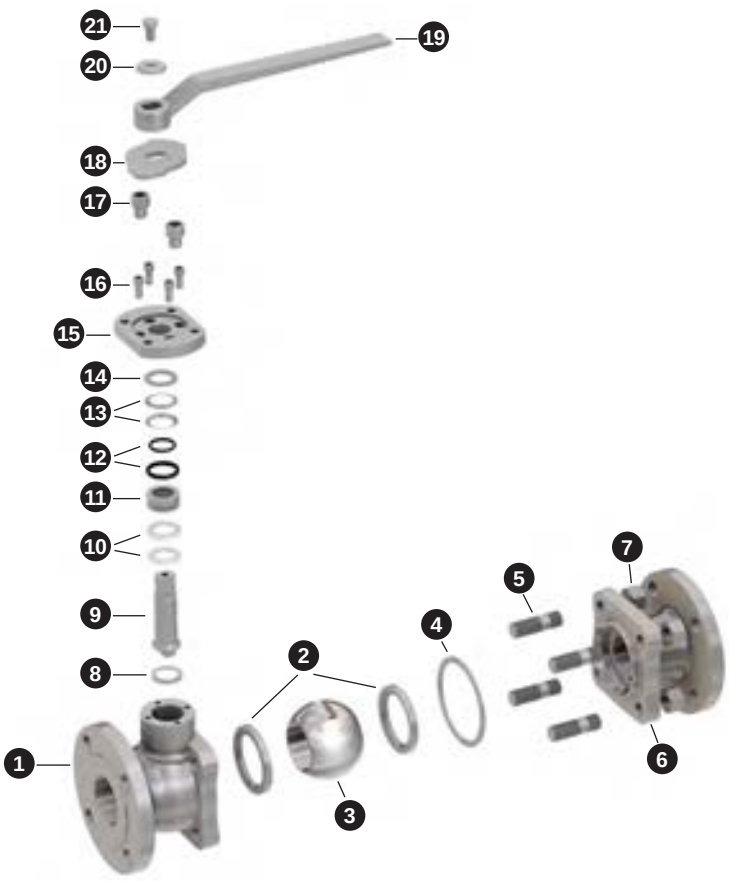

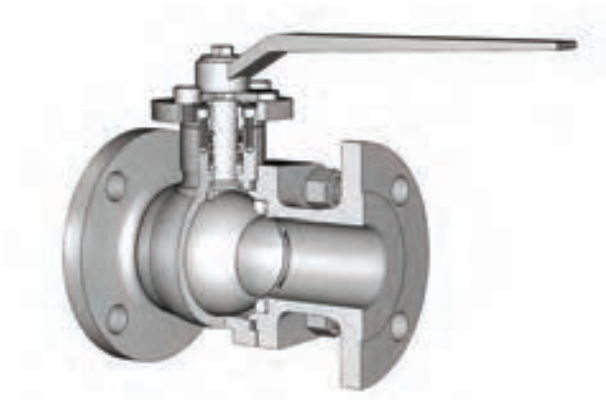

Features

Size : 1/2″ ~ 10″
Class : 150 ~ 300
Two Pieces Cast Steel Body
Floating Ball, Full & Reduced Bore
Anti-Static Device
Blow-out Proof Stem
Fire Safe Design
Low Emission

Specifications

DESIGN	ASME B16.34 / BS 5351 / API 6D
Face to Face	ASME B16.10
End Flange	ASME B16.5
BW End	ASME B16.25
Test	API 598 / BS 6755
Fire Safe Test	API607 / API 6FA
Special	NACE MR - 01 - 75

Material of Specifications

NO.	COMPONENT	MATERIAL	
		STAINLESS STEEL	CARBON STEEL
1	BODY	ASTM A351-CF8M	ASTM A216-WCB
2	SEAT	PTFE	PTFE
3	BALL	ASTM A351 CF8M	ASTM A351 CF8M
4	BODY GASKET	PTFE/SWG(SS316+GRAPHITE)	PTFE/SWG(SS316+GRAPHITE)
5	STUD BOLT	ASTM A193-B8	ASTM A193-B7
6	BODY CAP	ASTM A351-CF8M	ASTM A216-WCB
7	BODY NUT	ASTM A194-8	ASTM A194-2H
8	THRUST WASHER	PEEK	PEEK
9	STEM	ASTM A479-316	ASTM A276-TP316
10	PACKING	PTFE/GRAPHITE	PTFE/GRAPHITE
11	STEM SEAL RETAINER	ASTM A276-TP316	ASTM A276-TP316
12	O-RING	VITON	VITON
13	DISC SPRING	STAINLESS STEEL	CARBON STEEL
14	GLAND	ASTM A479-316	ASTM A276-TP316
15	GLAND FLANGE	ASTM A351-CF8M	ASTM A216-WCB
16	FLANGE BOLT	ASTM A193-B8	ASTM A193-B7
17	STOPPER BOLT	ASTM A193-B8	ASTM A193-B7
18	STOPPER	STAINLESS STEEL	CARBON STEEL
19	HANDLE	STAINLESS STEEL	CARBON STEEL
20	PLAIN WASHER	ASTM A240-TP304	ASTM A240-TP304
21	HANDLE BOLT	ASTM A193-B8	ASTM A307-B

2Piece Body Cast Floating Ball Valve

Dimensions and Weight

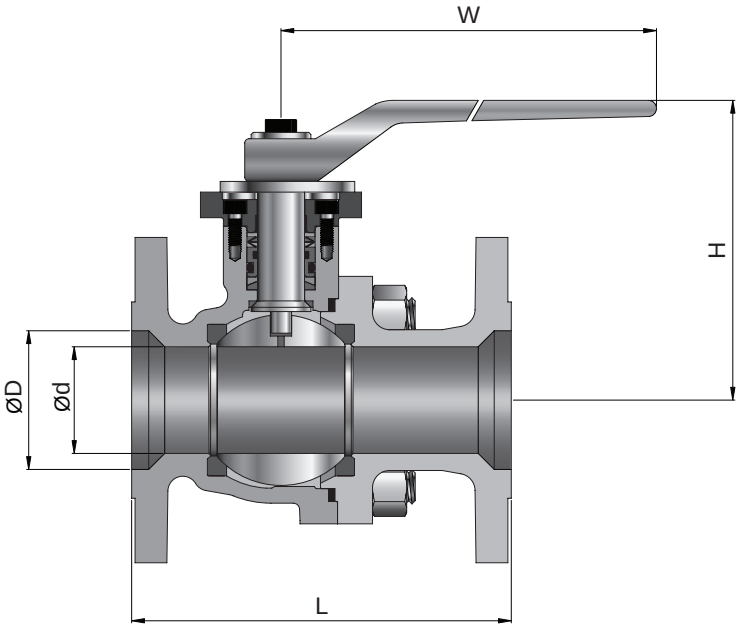

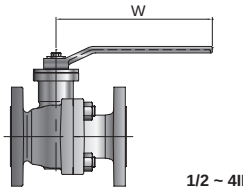

1/2 ~ 4INCH

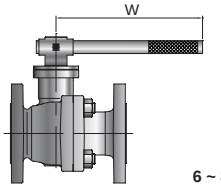

6 ~ 8INCH

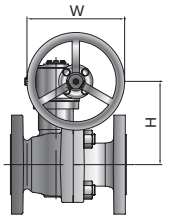

3 ~ 10INCH

Full Bore

Class150

Size (inch)	ØD	L	H	W	Weight (Kg)
1/2	15	108	88	140	2.2
3/4	20	117	92	140	2.7
1	25	127	101	170	4.5
1-1/2	38	165	124	250	7.0
2	50	178	142	250	9.5
2-1/2	65	191	159	350	15
3	76	203	194	350	19
4	100	229	210	460	30
6	152	394	292	*400	75
8	203	457	318	*500	115
10	254	533	408	*500	180.0

*Gear Operated

Reduced Bore

Class150

Size (inch)	Ød	ØD	L	H	W	Weight (Kg)
3/4~1/2	15	20	117	88	140	2
1-3/4	20	25	127	92	140	3.5
1•1/2-1	25	38	165	101	170	5
2-1•1/2	38	50	178	124	250	9
2•1/2-2	50	65	191	142	250	13.0
3-2	50	76	203	159	350	21
4-3	76	100	229	194	460	30
6-4	100	152	394	210	460	50
8-6	152	203	457	292	*400	100
10-8	203	254	533	318	*500	180

*Gear Operated

Class300

Size (inch)	ØD	L	H	W	Weight (Kg)
1/2	15	140	88	140	2.5
3/4	20	152	92	140	3.5
1	25	165	101	170	5.5
1-1/2	38	191	124	250	9.0
2	50	216	142	250	13
2-1/2	65	241	159	350	21
3	76	283	194	350	27
4	100	305	210	460	40
6	152	403	292	*400	95
8	203	502	318	*500	150
10	254	568	408	*500	230.0

*Gear Operated

Class300

Size (inch)	Ød (mm)	ØD (mm)	L (mm)	H (mm)	W (mm)	Weight (Kg)
3/4-1/2	15	20	152	88	140	3
1-3/4	20	25	165	92	140	4.6
1•1/2-1	25	38	191	101	170	7
2-1•1/2	38	50	216	124	250	12.5
2•1/2-2	50	65	241	142	250	17
3-2	50	76	283	159	350	33
4-3	76	100	305	194	460	40
6-4	100	152	403	210	460	70
8-6	152	203	502	292	*400	130.0
10-8	203	254	568	318	*500	220

*Gear Operated

• All dimensions in millimeters unless specified as “inch”. Dimension are for reference only, subject to change.

2Piece Body Forged Floating Ball Valve

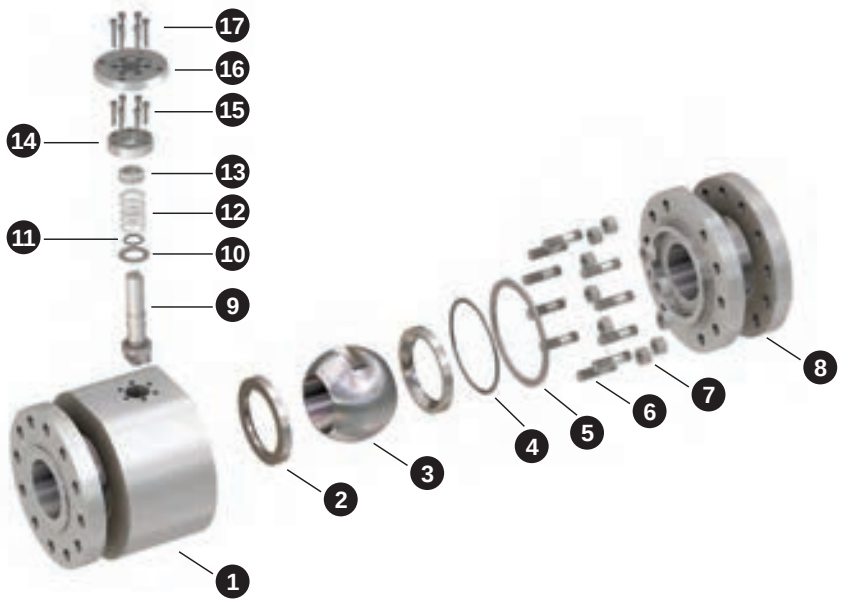

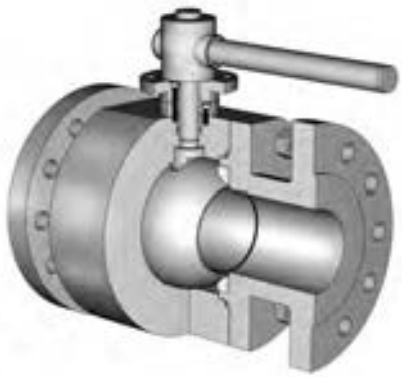

Features

Size : 1/2″ ~ 10″
Class : 150 ~ 2500
Two Pieces Forged Steel Body
Floating Ball, Full & Reduced Bore
Anti-Static Device
Blow-out Proof Stem
Fire Safe Design
Low Emission

Specifications

Design	ASME B16.34 / BS 5351 / API6D
Face to Face	ASME B16.10
End Flange	ASME B16.5
Test	API 598 / BS 6755
Fire Safe Test	API607 / API 6FA
Special	NACE MR - 01 - 75

Material of Specifications

NO.	COMPONENT	MATERIAL	
		STAINLESS STEEL	CARBON STEEL
1	BODY	ASTM A182-F316	ASTM A105
2	SEAT	R.PTFE/PEEK	R.PTFE/PEEK
3	BALL	ASTM A479-TP316	ASTM A479-TP316
4	FLANGE O-RING	VITON	VITON
5	BODY GASKET	PTFE/SWG(SS316+GRAPHITE)	PTFE/SWG(SS316+GRAPHITE)
6	STUD BOLT	ASTM A193-B8M	ASTM A193-B7
7	BODY NUT	ASTM A194-8M	ASTM A194-2H
8	BODY CAP	ASTM A182-F316	ASTM A105
9	STEM	ASTM A276-TP316	ASTM A276-TP316
10	THRUST WASHER	PEEK	PEEK
11	STEM O-RING	VITON	VITON
12	PACKING	PTFE/GRAPHITE	PTFE/GRAPHITE
13	GLAND	ASTM A276-TP316	ASTM A276-TP316
14	GLAND FLANGE	ASTM A276-TP316	ASTM A105
15	BOLT	ASTM A193-B8M	ASTM A193-B7
16	TOP FLANGE	ASTM A182-F316	ASTM A105
17	BOLT	ASTM A193-B8M	ASTM A193-B7

Dimensions and Weight

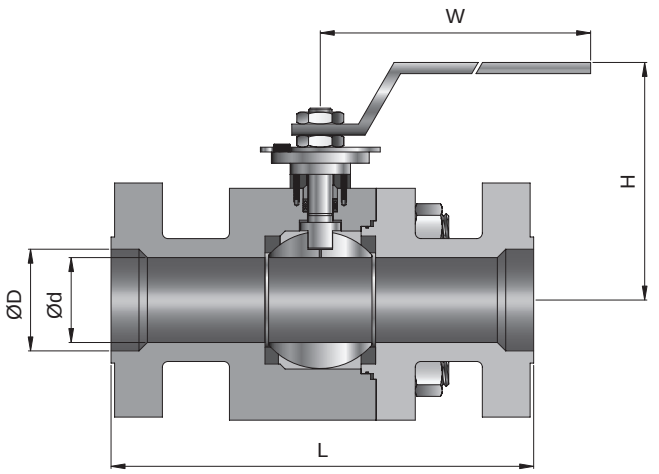

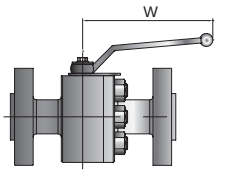

1/2 ~ 4INCH

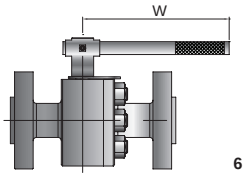

6 ~ 8INCH

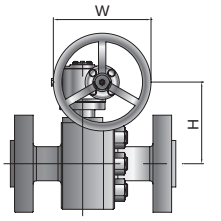

3 ~ 10INCH

Full Bore

Class150

Size (inch)	ØD	L	H	W	Weight (Kg)
1/2	15	108	81	150	2.8
3/4	20	117	85	150	3.7
1	25	127	98	180	5.3
1-1/2	38	165	133	280	8.3
2	50	178	141	280	11.2
2-1/2	65	191	139	400	18.4
3	76	203	150	400	23.0
4	100	229	223	650	39.3
6	152	394	297	*300	90.0
8	203	457	378	*300	140.0
10	254	533	408	*400	230.0

*Gear Operated

Class300

Size (inch)	ØD	L	H	W	Weight (Kg)
1/2	15	140	81	150	3.0
3/4	20	152	85	150	4.0
1	25	165	98	180	6.6
1-1/2	38	191	133	280	12.9
2	50	216	141	280	18.9
2-1/2	65	241	139	400	28.0
3	76	283	150	400	39.0
4	100	305	223	650	60.0
6	152	403	297	*300	130.0
8	203	502	378	*400	195.0
10	254	568	408	*400	290.0

*Gear Operated

Class600

Size (inch)	ØD	L	H	W	Weight (Kg)
1/2	15	165	66	150	3.5
3/4	20	191	88	170	5.0
1	25	216	90	250	7.5
1-1/2	38	241	120	400	15.0
2	50	292	135	400	23.0
3	76	356	164	400	48.0
4	100	432	224	995	80.0
6	152	559	260	*400	156.0

*Gear Operated

Reduced Bore

Class150

Size (inch)	Ød	ØD	L	H	W	Weight (Kg)
3/4-1/2	15	20	117	81	150	3.5
1-3/4	20	25	127	85	150	5.0
1•1/2-1	25	38	165	98	180	7.5
2-1•1/2	38	50	178	133	280	10.0
2•1/2-2	50	65	191	141	280	16.0
3-2	50	76	203	141	280	21.0
4-3	76	100	229	150	400	35.0
6-4	100	152	394	223	650	73.0
8-6	152	203	457	297	*300	120.0
10-8	203	254	533	378	*300	200.0

*Gear Operated

Class300

Size (inch)	Ød	ØD	L	H	W	Weight (Kg)
3/4-1/2	15	20	152	81	150	3.7
1-3/4	20	25	165	85	150	5.8
1•1/2-1	25	38	191	98	180	10.5
2-1•1/2	38	50	216	133	280	16.1
2•1/2-2	50	65	241	141	280	24.5
3-2	50	76	283	141	280	34.7
4-3	76	100	305	150	400	53.0
6-4	100	152	403	223	650	100.0
8-6	152	203	502	297	*300	170.0
10-8	203	254	568	378	*400	250.0

*Gear Operated

Class600

Size (inch)	Ød	ØD	L	H	W	Weight (Kg)
3/4-1/2	15	20	191	66	150	4.0
1-3/4	20	25	216	88	170	5.5
1•1/2-1	25	38	241	90	250	10.5
2-1•1/2	38	50	292	120	400	20.0
3-2	50	76	356	135	400	29.0
4-3	76	100	432	164	400	59.0
6-4	100	152	559	224	995	95.0
8-6	152	203	660	260	*400	190.0

*Gear Operated

• All dimensions in millimeters unless specified as “inch”. Dimension are for reference only, subject to change.

Dimensions and Weight

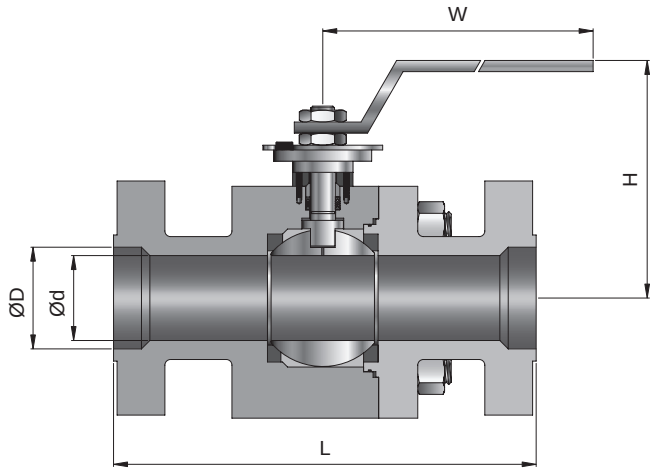

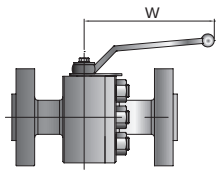

1/2 ~ 4INCH

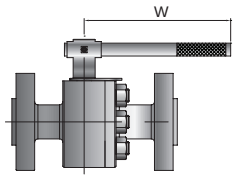

6 ~ 8INCH

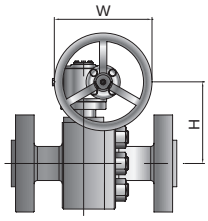

3 ~ 10INCH

Full Bore

Class900

Size (inch)	ØD	L	H	W	Weight (Kg)
1/2	15	216	75	140	5.0
3/4	20	229	91	180	8.0
1	25	254	108	250	10.0
1-1/2	38	305	133	400	20.0
2	50	368	150	500	30.0
3	76	381	160	500	55.0

Reduced Bore

Class900

Size (inch)	Ød	ØD	L	H	W	Weight (Kg)
3/4-1/2	15	20	229	75	140	7.0
1-3/4	20	25	254	91	180	9.5
1•1/2-1	25	38	305	108	250	16.5
2-1•1/2	38	50	368	133	400	23.0
3-2	50	76	381	150	500	42.0
4-3	76	100	457	160	500	65.0

Class1500

Size (inch)	ØD	L	H	W	Weight (Kg)
1/2	15	216	75	140	5.0
3/4	20	229	91	180	8.0
1	25	254	108	250	10.0
1-1/2	38	305	133	400	20.0
2	50	368	150	500	30.0
3	76	470	160	500	65.0

Class1500

Size (inch)	Ød	ØD	L	H	W	Weight (Kg)
3/4-1/2	15	20	229	75	140	7.0
1-3/4	20	25	254	91	180	9.5
1•1/2-1	25	38	305	108	250	16.5
2-1•1/2	38	50	368	133	400	23.0
3-2	50	76	470	150	500	60.0
4-3	76	100	546	160	500	78.0

Class2500

Size (inch)	ØD	L	H	W	Weight (Kg)
1/2	15	264	88	230	7.5
3/4	20	273	117	230	12.0
1	25	308	128	300	15.0
1-1/2	38	387	148	400	30.0
2	42	451	183	500	37.5

Class2500

Size (inch)	Ød	ØD	L	H	W	Weight (Kg)
3/4-1/2	15	20	273	88	230	11.0
1-3/4	20	25	308	117	230	14.0
1•1/2-1	25	38	387	128	300	25.0
2-1•1/2	38	50	451	148	400	35.0
3-2	42	76	578	183	500	60.0

• All dimensions in millimeters unless specified as “inch”. Dimension are for reference only, subject to change.

Small Sizes Forged Floating Ball Valve

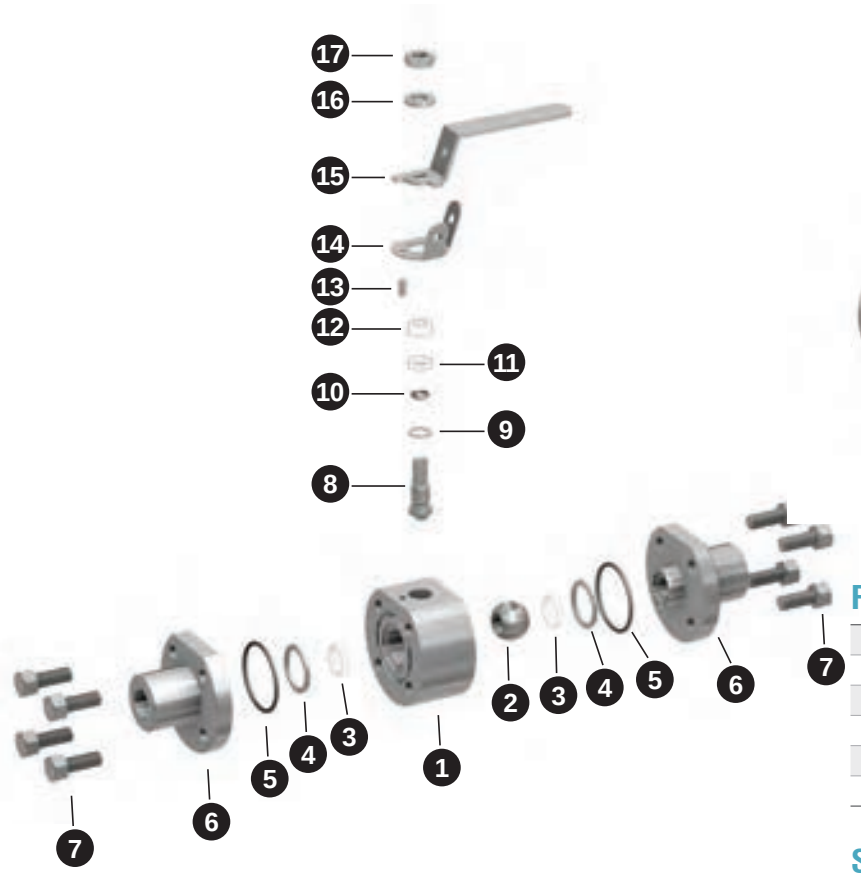

Features

Size : 1/2″ ~ 2″
Class : 800 ~ 1500
Three Pieces Forged Steel Body
Floating Ball
Anti-Static Device
Blow-out Proof Stem

Specifications

Design	ASME B16.34 / BS 5351
Face to Face	Manufacturer Standard
Thread End	ASME B1.20.1
Socket Welding End	ASME B16.11
Test	API 598 / BS 6755
Special	NACE MR - 01 - 75

Material of Specifications

NO.	COMPONENT	MATERIAL	
		STAINLESS STEEL	CARBON STEEL
1	BODY	ASTM A182-F316	ASTM A105
2	BALL	ASTM A479-TP316	ASTM A479-TP316
3	SEAT	R.PTFE/PEEK	R.PTFE/PEEK
4	BODY GASKET	PTFE/GRAPHITE	PTFE/GRAPHITE
5	FLANGE O-RING	VITON	VITON
6	BODY CAP	ASTM A182-F316	ASTM A105
7	FLANGE BOLT	ASTM A193-B8M	ASTM A193-B7
8	STEM	ASTM A276-TP316	ASTM A276-TP316
9	THRUST WASHER	PEEK	PEEK
10	STEM O-RING	VITON	VITON
11	STEM PACKING	PTFE/GRAPHITE	PTFE/GRAPHITE
12	GLAND	ASTM A276-TP316	ASTM A276-TP316
13	PIN	STAINLESS STEEL	CARBON STEEL
14	LOCK PLATE	STAINLESS STEEL	CARBON STEEL
15	HANDLE	STAINLESS STEEL	CARBON STEEL
16	PLAIN WASHER	STAINLESS STEEL	CARBON STEEL
17	NUT	ASTM A194-8M	ASTM A194-2H

Dimensions and Weight

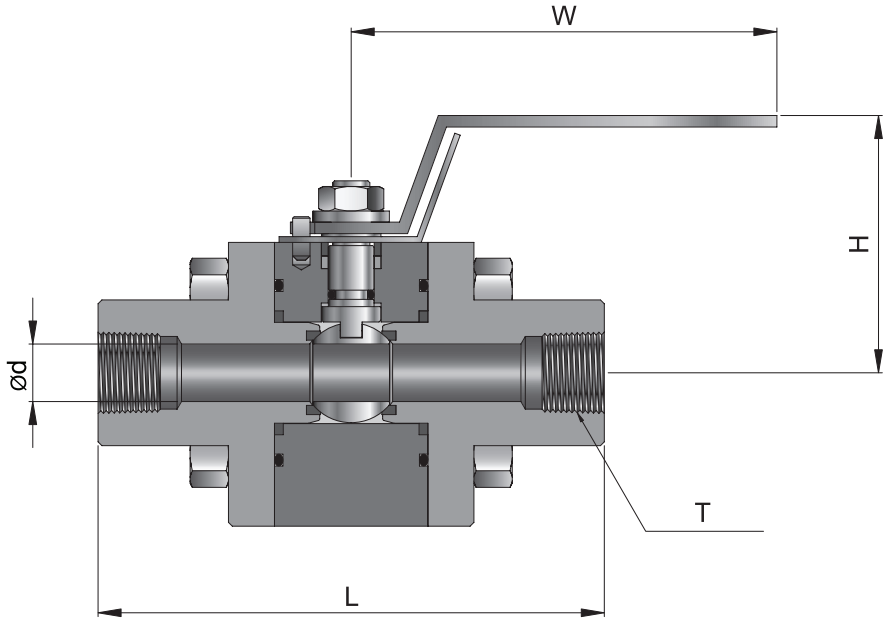

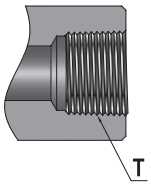

NPT Thread End

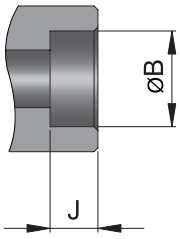

Socket Welding End

Class800

Port	Size	Ød	H	L		W	ØB	J	T
				FNPT	SW				
Reduced Bore	1/2	10.0	60.0	75.0	140.0	150.0	21.8	9.6	1/2
	3/4	15.0	62.0	80.0	155.0	150.0	27.1	12.7	3/4
	1	20.0	74.0	100.0	165.0	200.0	33.8	12.7	1
	1-1/4	25.0	88.0	120.0	180.0	200.0	42.6	12.7	1-1/4
	1-1/2	32.0	88.0	120.0	190.0	200.0	48.7	12.7	1/1/2
	2	38.0	93.0	140.0	230.0	250.0	61.2	15.7	2
Full Bore	1/2	15.0	62.0	80.0	140.0	150.0	21.8	9.6	1/2
	3/4	20.0	74.0	100.0	155.0	150.0	27.1	12.7	3/4
	1	25.0	88.0	120.0	165.0	200.0	33.8	12.7	1
	1-1/4	32.0	93.0	120.0	180.0	200.0	42.6	12.7	1-1/4
	1-1/2	38.0	93.0	140.0	190.0	250.0	48.7	12.7	1/1/2
	2	50.0	107.0	175.0	230.0	250.0	61.2	15.7	2

Class1500

Port	Size	Ød	H	L		W	ØB	J	T
				FNPT	SW				
Reduced Bore	1/2	10.0	65.0	75.0	140.0	150.0	21.8	9.6	1/2
	3/4	15.0	67.0	80.0	155.0	150.0	27.1	12.7	3/4
	1	20.0	72.0	100.0	165.0	200.0	33.8	12.7	1
	1-1/4	25.0	93.0	120.0	180.0	200.0	42.6	12.7	1-1/4
	1-1/2	32.0	93.0	120.0	190.0	200.0	48.7	12.7	1/1/2
	2	38.0	105.0	140.0	230.0	250.0	61.2	15.7	2
Full Bore	1/2	15.0	67.0	80.0	140.0	150.0	21.8	9.6	1/2
	3/4	20.0	72.0	100.0	155.0	150.0	27.1	12.7	3/4
	1	25.0	93.0	120.0	165.0	200.0	33.8	12.7	1
	1-1/4	32.0	105.0	120.0	180.0	200.0	42.6	12.7	1-1/4
	1-1/2	38.0	105.0	140.0	190.0	250.0	48.7	12.7	1/1/2

• All dimensions in millimeters unless specified as “inch”. Dimension are for reference only, subject to change.

Trunnion Mounted Ball Valves-Design Features

Single Piston Effect.

In the standard design of Trunnion Mounted Ball Valves, each seat ring performs the “Single piston” action.
In this case the pressure acting on the external side of the seat ring results in a force pushing equally against the ball while the pressure acting on the internal side of the seat rings results in a force pushing equally away from the ball. Therefore while both seat rings grant the required tightness when the pressure is applied on their external side, they are “Self Relieving” allowing any excess pressure acting in the body cavity to be discharged in the line as soon as the force caused by the pressure overcomes the one provided by the springs.

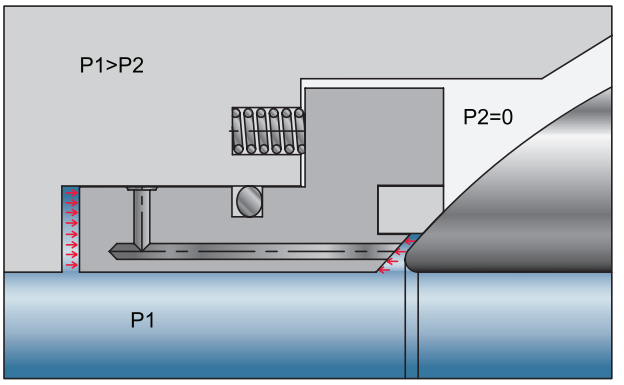

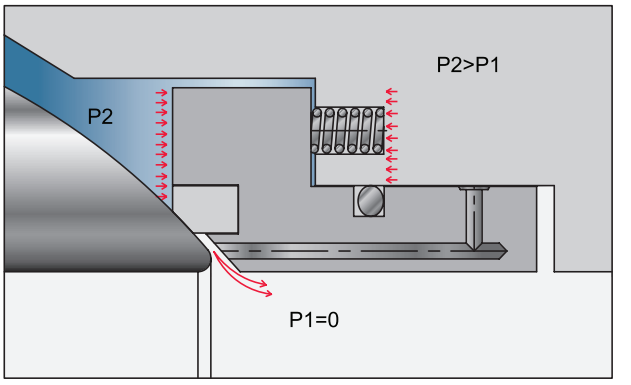

Double Piston Effect

By request, the seat rings design may be modified to perform "Double Piston Effect" action. In this case the pressure acting on both the external and internal side of the seat rings results in a force pushing equally against the ball. Therefore each seat ring allows for the required tightness even if the pressure is applied in the body cavity. This feature adds an extra sealing feature to the valve, but to release the possible excess pressure developed in the body cavity it is necessary to use an external safety relief valve.

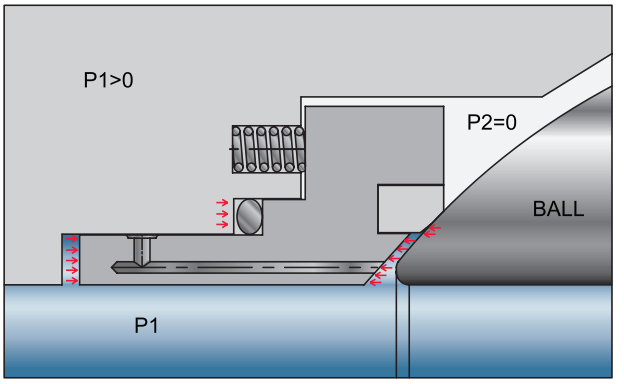

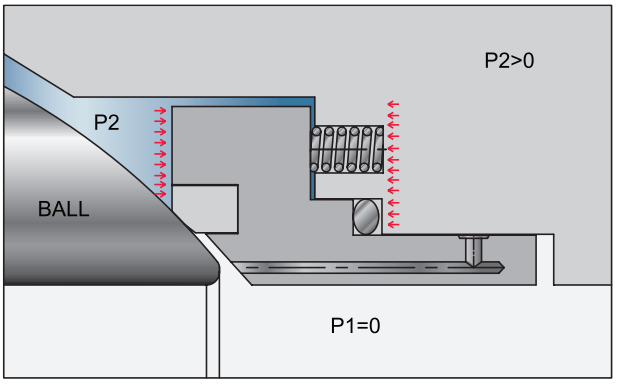

Fire Safe Design.

A secondary metal seat is provided to maintain contact between the seat and ball in the event the primary non-metallic seat is destroyed by fire.
Valves are fire safe by design.
The double body and bonnet seals give maximum security.
BMT valves are fitted with special graphite seals so as to effectively stop all leakage in the event of a fire. All trunnion Mounted ball valves have been tested to API-607/API-6FA

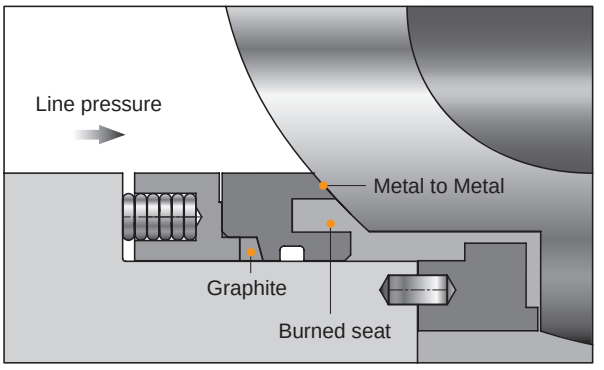

Secondary Seat and Stem Sealing Option.

Ball valves are designed to provide high integrity shut-off.
Upon request, sealant injection fittings are installed.
In case of seat insert or stem seal damage, external or internal leakages can occur. An emergency sealant injection can save the integrity of the valve by incorporating a sealant seal around the stem or between the seat and the ball.

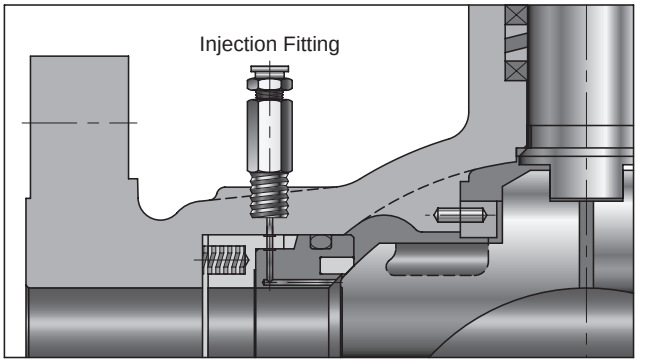

2Piece Body Cast Trunnion Mounted Ball Valve

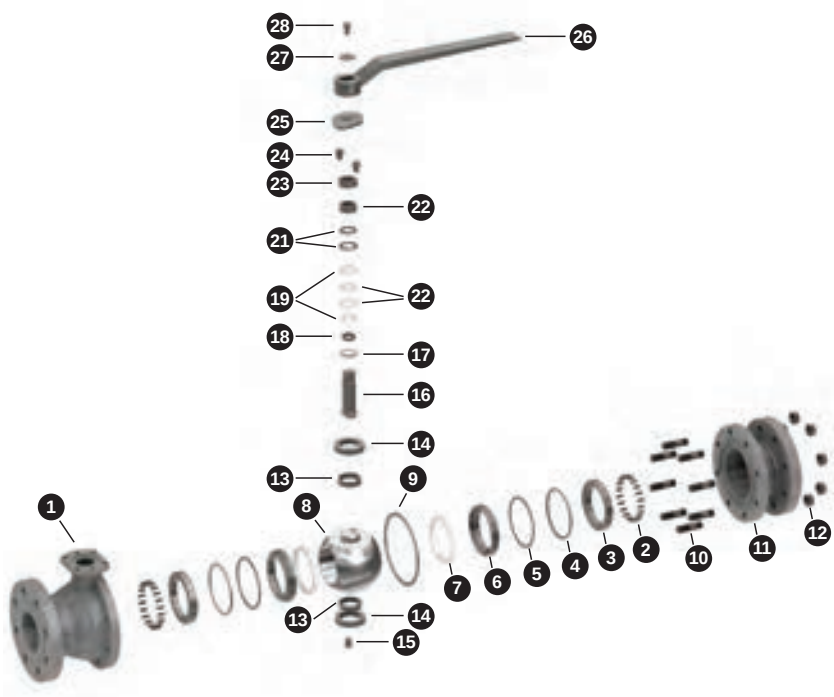

Features

Size : 2″ ~ 24″
Class : 150 ~ 600
Two Pieces Cast Steel Body
Trunnion Mounted Ball, Full & Reduced Bore
Anti-Static Device
Blow-out Proof Stem
Fire Safe Design
Emergency Sealant injector (6" & Larger)

Specifications

Design	ASME B16.34 / API6D
Face to Face	ASME B16.10 / API6D
End Flange	ASME B16.5
BW End	ASME B16.25
Test	API6D
Fire Safe Test	API 607 / API 6FA
Special	NACE MR - 01 - 75

Material of Specifications

NO.	COMPONENT	MATERIAL	
		STAINLESS STEEL	CARBON STEEL
1	BODY	ASTM A351-CF8M	ASTM A216-WCB
2	SPRING	Inconel X-750	Inconel X-750
3	GASKER RETAINER	ASTM A276-TP316	ASTM A276-TP316
4	RETAINER SEAL	PTFE/GRAPHITE	PTFE/GRAPHITE
5	RETAINER O-RING	VITON	VITON
6	SEAT RETAINER	ASTM A276-TP316	ASTM A276-TP316
7	SEAT	R.PTFE/NYLON	R.PTFE/NYLON
8	BALL	ASTM A351-CF8M	ASTM A351-CF8M
9	BODY GASKET	PTFE/SWG(SS316+GRAPHITE)	PTFE/SWG(SS316+GRAPHITE)
10	STUD BOLT	ASTM A193-B8M	ASTM A193-B7
11	BODY CAP	ASTM A351-CF8M	ASTM A216-WCB
12	NUT	ASTM A194-8M	ASTM A194-2H
13	TRUNNION BEARING	R.PTFE	R.PTFE
14	TRUNNION PLATE	ASTM A276-TP316	ASTM A276-TP316
15	DRAIN PLUG	ASTM A276-TP316	Carbon Steel
16	STEM	ASTM A276-TP316	ASTM A276-TP316
17	THRUST WASHER	PEEK	PEEK
18	THRUST BEARING	R.PTFE	R.PTFE
19	PACKING GLAND	ASTM A276-TP316	ASTM A276-TP316
20	PACKING	PTFE/GRAPHITE	PTFE/GRAPHITE
21	O-RING	VITON	VITON
22	STEM SEAL RETAINER	ASTM A276-TP316	ASTM A105
23	GLAND	ASTM A276-TP316	ASTM A105
24	STOP BOLT	ASTM A193-B8	ASTM A193-B7
25	STOPPER	STAINLESS STEEL	Carbon Steel
26	HANDLE	STAINLESS STEEL	Carbon Steel
27	PLAIN WASHER	STAINLESS STEEL	Carbon Steel
28	HANDLE BOLT	ASTM A193-B8	ASTM A193-B7

Dimensions and Weight

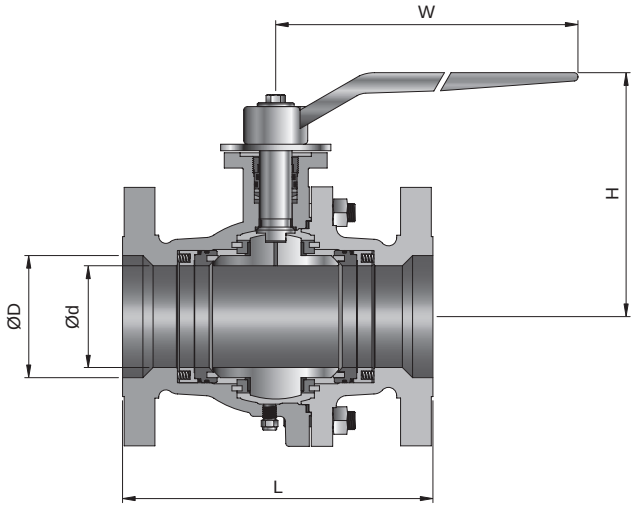

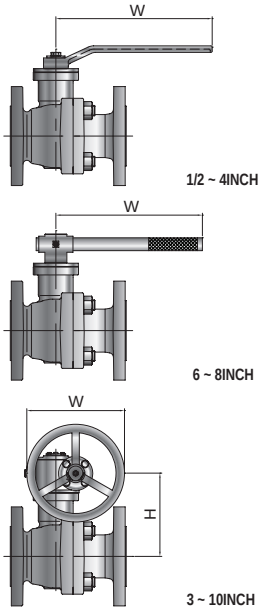

Full Bore

Class150

Size (inch)	ØD	L	H	W	Weight (Kg)
2	50	178	144	250	18
3	76	203	194	460	32
4	100	229	210	460	56
6	152	394	286	*400	125
8	203	457	338	*500	195
10	254	533	387	*500	270
12	305	610	450	*600	470
14	337	686	498	*700	570
16	387	762	550	*700	875
18	438	864	615	*800	935
20	489	914	647	*800	1520
24	591	1067	751	*900	2150

*Gear Operated

Class300

Size (inch)	ØD	L	H	W	Weight (Kg)
2	50	216	144	250	26
3	76	283	194	460	45
4	100	305	210	460	75
6	152	403	286	*400	152
8	203	502	338	*500	234
10	254	568	387	*500	303
12	305	648	450	*600	502
14	337	762	498	*700	602
16	387	838	550	*700	1001
18	438	914	615	*700	1155
20	489	991	647	*800	1815
24	591	1143	751	*900	2550

*Gear Operated

Class600

Size (inch)	ØD	L	H	W	Weight (Kg)
2	50	292	144	250	27
3	76	356	194	460	53
4	100	432	235	800	93
6	152	559	300	*500	200
8	203	660	360	*600	340
10	254	787	430	*700	550
12	305	838	468	*700	785
14	337	889	550	*800	850
16	387	991	615	*900	1580
18	438	1092	724	*900	2170
20	489	1194	810	*900	2630
24	591	1397	1010	*900	3950

*Gear Operated

Reduced Bore

Class150

Size (inch)	Ød	ØD	L	H	W	Weight (Kg)
3-2	50	76	203	144	250	26
4-3	76	100	229	194	460	50
6-4	100	152	394	210	460	118
8-6	152	203	457	286	*400	150
10-8	203	254	533	338	*500	230
12-10	254	305	610	387	*500	278
14-12	305	337	686	450	*600	460
16-14	337	387	762	498	*700	585
18-16	387	438	864	550	*700	890
20-18	438	489	914	615	*800	955
24-20	489	591	1067	647	*800	1650

*Gear Operated

Class300

Size (inch)	Ød	ØD	L	H	W	Weight (Kg)
3-2	50	76	283	144	250	35
4-3	76	100	305	194	460	65
6-4	100	152	403	210	460	135
8-6	152	203	502	286	*400	200
10-8	203	254	568	338	*500	290
12-10	254	305	648	387	*500	310
14-12	305	337	762	450	*600	520
16-14	337	387	838	498	*700	820
18-16	387	438	914	550	*700	1025
20-18	438	489	991	615	*800	1180
24-20	489	591	1143	647	*800	1950

*Gear Operated

Class600

Size (inch)	Ød	ØD	L	H	W	Weight (Kg)
3-2	50	76	356	144	250	43
4-3	76	100	432	194	460	67
6-4	100	152	559	235	800	98
8-6	152	203	660	300	*400	205
10-8	203	254	787	360	*500	350
12-10	254	305	838	430	*700	605
14-12	305	337	889	468	*700	820
16-14	337	387	991	550	*800	980
18-16	387	438	1092	615	*900	1805
20-18	438	489	1194	724	*900	2480
24-20	489	591	1397	810	*900	3800

*Gear Operated

• All dimensions in millimeters unless specified as “inch”. Dimension are for reference only, subject to change.

3Piece Body Forged Trunnion Mounted Ball Valve

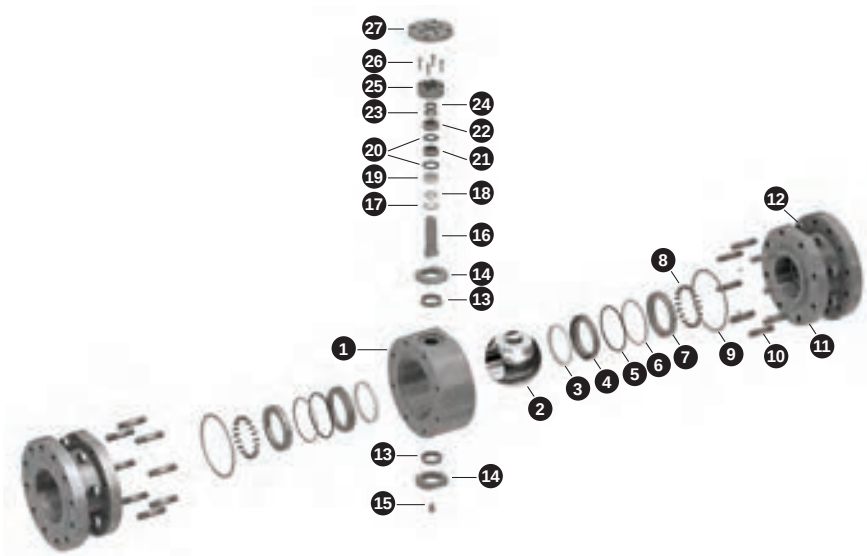

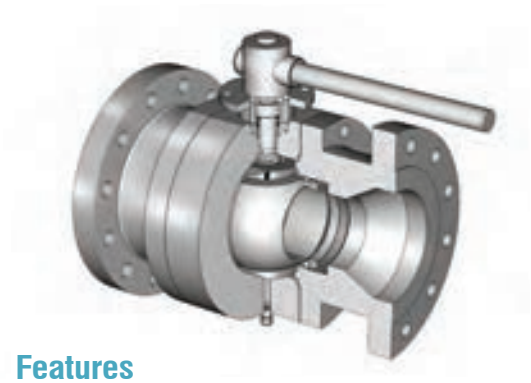

Features

Size : 2″ ~ 40″
Class : 150 ~ 2500
Three Pieces Forged Steel Body
Trunnion Mounted Ball, Full & Reduced Bore
Anti-Static Device
Blow-out Proof Stem
Double Block Bleed
Fire Safe Design
Emergency Sealant injector (6" & Larger)
Vent Valve(6" & Larger)
Lifting Lugs & Supporting Feet (8" & Larger)

Specifications

Design	ASME B16.34 / API6D
Face to Face	ASME B16.10 / API6D
End Flange	ASME B16.5
Test	API6D
Fire Safe Test	API 607 / API 6FA
Special	NACE MR - 01 - 75

Material of Specifications

NO.	COMPONENT	MATERIAL	
		STAINLESS STEEL	CARBON STEEL
1	BODY	ASTM A182-F316	ASTM A105
2	BALL	ASTM A182-F316/A276-TP316	ASTM A182-F316/A105+ENP
3	SEAT	PTFE/DEVLON/NYLON	PTFE/DEVLON/NYLON
4	SEAT RETAINER	ASTM A276-TP316	ASTM A276-TP316
5	RETAINER O-RING	VITON	VITON
6	RETAINER SEAL	PTFE/GRAPHITE	PTFE/GRAPHITE
7	GASKER RETAINER	ASTM A276-TP316	ASTM A276-TP316
8	SPRING	INCONEL X-750	INCONEL X-750
9	BODY GASKET	PTFE/SWG(SS316+GRAPHITE)	PTFE/SWG(SS316+GRAPHITE)
10	STUD BOLT	ASTM A193-B8M	ASTM A193-B7
11	BODY CAP	ASTM A182-F316	ASTM A105
12	NUT	ASTM A194-8M	ASTM A194-2H
13	TRUNNION BEARING	R.PTFE	R.PTFE
14	TRUNNION PLATE	ASTM A276-TP316	ASTM A276-TP316
15	DRAIN PLUG	ASTM A276-TP316	CARBON STEEL
16	STEM	ASTM A564-TP630	ASTM A564-TP630/AISI4140+ENP
17	THRUST WASHER	PEEK	PEEK
18	THRUST BEARING	R.PTFE	R.PTFE
19	BUSHING	PEEK	PEEK
20	PACKING GLAND	ASTM A276-TP316	ASTM A276-TP316
21	STEM PACKING	PTFE/GRAPHITE	PTFE/GRAPHITE
22	O-RING RETAINER	ASTM A276-TP316	ASTM A105
23	O-RING	VITON	VITON
24	O-RING	VITON	VITON
25	BONNET	ASTM A276-TP316	.ASTM A105
26	BOLT	ASTM A193-B8M	ASTM A193-B7
27	GEARBOX BASE	ASTM A276-TP316	ASTM A105

Dimensions and Weight

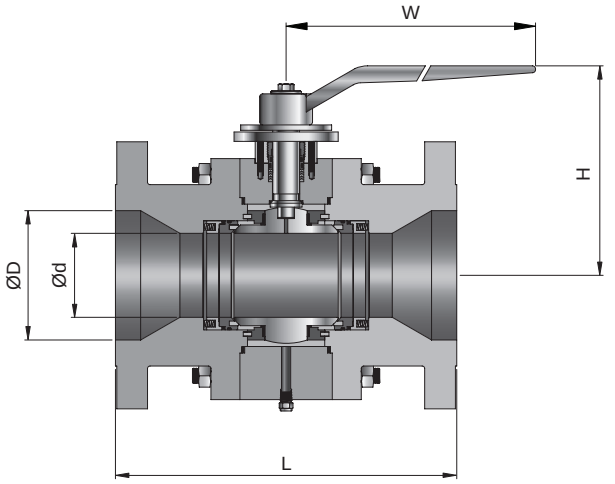

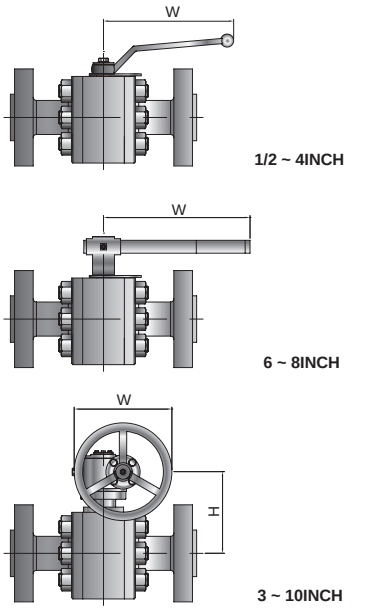

Full Bore

Class150

Size (inch)	ØD	L	H	W	Weight (Kg)
2	50	178	180	265	30
3	76	203	190	285	60
4	100	229	212	285	92
6	152	394	277	*400	190
8	203	457	301	*400	345
10	254	533	359	*500	495
12	305	610	419	*600	705
14	337	686	460	*600	859
16	387	762	494	*600	1020
18	438	864	521	*600	1440
20	489	914	656	*600	1918
24	591	1067	795	*700	2803

*Gear Operated

Reduced Bore

Class150

Size (inch)	Ød	ØD	L	H	W	Weight (Kg)
2-1•1/2	38	50	178	140	250	26
3-2	50	76	203	180	265	34
4-3	76	100	229	190	285	62
6-4	100	152	394	212	285	102
8-6	152	203	457	277	*400	225
10-8	203	254	533	301	*400	373
12-10	254	305	610	359	*500	533
14-12	305	337	686	419	*600	730
16-14	337	387	762	460	*600	790
18-16	387	438	864	494	*600	1095
20-18	438	489	914	521	*600	1152
24-20	489	591	1067	656	*600	2060

*Gear Operated

Class300

Size (inch)	ØD	L	H	W	Weight (Kg)
2	50	216	180	265	31
3	76	283	190	285	69
4	100	305	212	400	11
6	152	403	277	*400	211
8	203	502	308	*500	376
10	254	568	381	*600	540
12	305	648	429	*600	763
14	337	762	460	*600	900
16	387	838	581	*600	1300
18	438	914	674	*700	1715
20	489	991	713	*700	2090
24	591	1143	850	*760	2890

*Gear Operated

Class300

Size (inch)	Ød	ØD	L	H	W	Weight (Kg)
2-1•1/2	38	50	216	140	250	30
3-2	50	76	283	180	265	37
4-3	76	100	305	190	285	74
6-4	100	152	403	212	400	142
8-6	152	203	502	277	*400	253
10-8	203	254	598	308	*500	410
12-10	254	305	648	381	*600	580
14-12	305	337	762	429	*600	830
16-14	337	387	838	460	*600	970
18-16	387	438	914	581	*600	1530
20-18	438	489	991	674	*700	1830
24-20	489	591	1143	713	*700	2220

*Gear Operated

• All dimensions in millimeters unless specified as “inch”. Dimension are for reference only, subject to change.

Dimensions and Weight

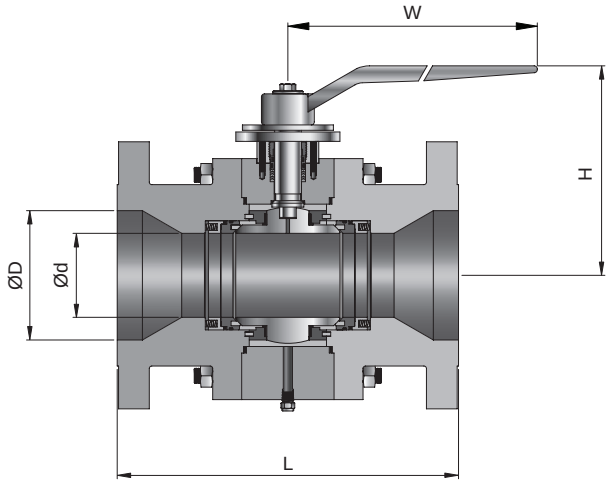

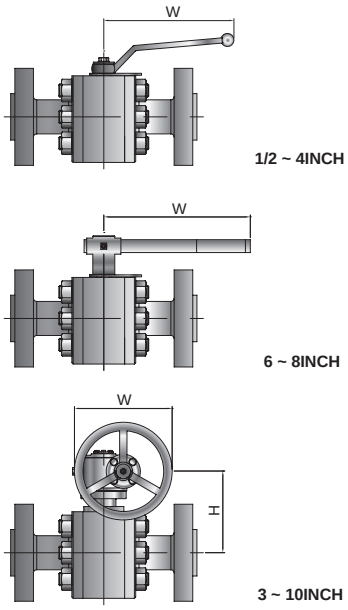

Full Bore

Class600

Size (inch)	ØD	L	H	W	Weight (Kg)
2	51	292	172	285	45
3	76	356	205	400	80
4	102	432	308	755	150
6	152	559	274	*500	248
8	203	660	342	*600	438
10	254	787	393	*600	701
12	305	838	522	*600	925
14	337	889	551	*600	1230
16	387	991	637	*700	1535
18	438	1092	683	*800	2135
20	489	1194	719	*800	2640
24	591	1397	823	*800	3960

*Gear Operated

Reduced Bore

Class600

Size (inch)	Ød	ØD	L	H	W	Weight (Kg)
2-1•1/2	38	51	292	164	265	40
3-2	51	76	356	172	285	54
4-3	76	102	432	205	400	99
6-4	102	152	559	308	755	212
8-6	152	203	660	274	*500	304
10-8	203	254	787	342	*600	510
12-10	254	305	838	393	*600	902
14-12	305	337	889	522	*600	1090
16-14	337	387	991	551	*600	1310
18-16	387	438	1092	637	*700	1640
20-18	438	489	1194	683	*800	2270
24-20	489	591	1397	719	*800	3440

*Gear Operated

Class900

Size (inch)	ØD	L	H	W	Weight (Kg)
2	51	368	193	400	52
3	76	381	302	755	87
4	102	457	332	*400	160
6	152	610	320	*600	385
8	203	737	365	*600	560
10	254	838	495	*600	820
12	305	965	600	*700	1125
14	324	1029	625	*760	1610

*Gear Operated

Class900

Size (inch)	Ød	ØD	L	H	W	Weight (Kg)
2-1•1/2	38	51	368	175	285	45
3-2	51	76	381	193	400	56
4-3	76	102	457	302	755	94
6-4	102	152	610	332	*400	226
8-6	152	203	737	320	*600	480
10-8	203	254	838	365	*600	650
12-10	254	305	965	495	*600	868
14-12	305	324	1029	600	*700	1310

*Gear Operated

• All dimensions in millimeters unless specified as “inch”. Dimension are for reference only, subject to change.

Dimensions and Weight

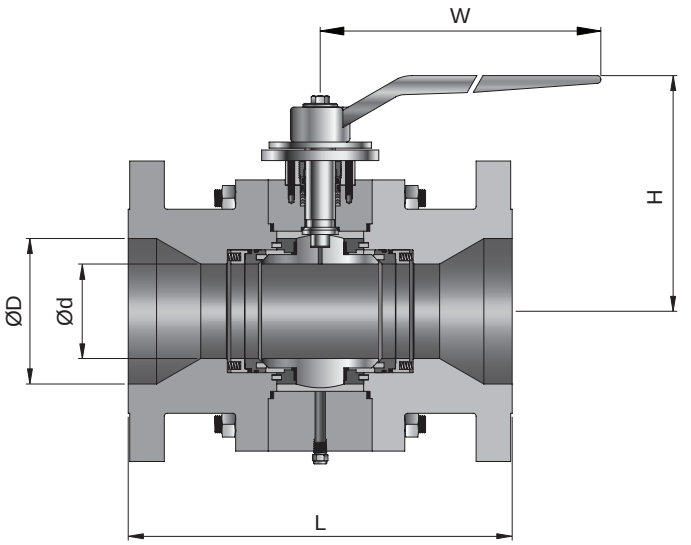

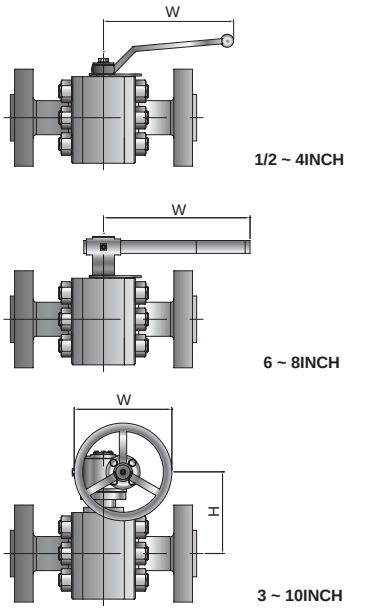

Full Bore

Class1500

Size (inch)	ØD	L	H	W	Weight (Kg)
2	50	368	193	400	60
3	76	470	270	1135	115
4	100	546	275	*500	194
6	146	705	325	*600	580
8	194	832	501	*700	758
10	241	991	536	*700	1195
12	289	1130	614	*800	1970
14	318	1257	662	*800	2250

*Gear Operated

Reduced Bore

Class1500

Size (inch)	Ød	ØD	L	H	W	Weight (Kg)
2-1•1/2	38	50	368	183	285	56
3-2	50	76	470	193	400	82
4-3	76	100	546	270	1135	150
6-4	100	146	705	275	*500	295
8-6	146	194	832	325	*600	690
10-8	194	241	991	501	*700	930
12-10	241	289	1130	536	*700	1340
14-12	289	318	1257	614	*800	2070

*Gear Operated

• All dimensions in millimeters unless specified as “inch”. Dimension are for reference only, subject to change.

Ordering Information

Example : **FB2F 2 2 - R 12 C - A031 - AB**

1 2 3 4 5 6 7 8

1. Valve Series

SERIES	I.D		TYPE
FLOATING BALL	FB	1C	1-PIECE CASTING
		2C	2-PIECE CASTING
		3C	3-PIECE CASTING
		1F	1-PIECE FORGED
		2F	2-PIECE FORGED
		3F	3-PIECE FORGED
TRUNNION BALL	FBT	2C	2-PIECE CASTING
		3C	3-PIECE CASTING
		2F	2-PIECE FORGED
		3F	3-PIECE FORGED

2. Valve Type

1 : FLANGE x FNPT
2 : FLANGE x FLANGE
3 : MNPT x FNPT
4 : FNPT x FNPT
5 : MSW x FNPT
6 : SW x FNPT
7 : BW x FNPT
8 : MSW x FLANGE
9 : MNPT x FLANGE
0 : SW x SW
B : BW x BW

3. Bore

BLANK : 10mm
1 : 15mm
2 : 20mm
3 : 25mm
4 : 32mm
5 : 38mm
6 : 50mm
7 : 65mm
8 : 80mm
9 : 100mm
10 : 125mm
11 : 150mm
12 : 200mm

4. Connection Size

R : RAISED FACE(BLANK)
AF : API 6B TYPE
JF : JIS FLANGE
J : RING TYPE JOINT
SA : SAE J518 FLANGE
F : FLAT FACE
IS : ISO 6164 FLANGE
JO : JIS OIL FLANGE

5. SIZE

ANSI FLANGE						API 6B FLANGE		JIS FLANGE	
SIZE	DN	I.D	SIZE	DN	I.D	SIZE	I.D	SIZE	I.D
1/2	15	8	3	80	48	1-13/16	1	15	8
3/4	20	12	4	100	64	2-1/16	2	20	12
1	25	16	5	125	80	2-9/16	3	25	16
1-1/4	32	20	6	150	96	3-1/16	4	32	20
1-1/2	40	24	8	200	128	4-1/16	5	40	24
2	50	32	10	250	160	5-1/16	6	50	32
2-1/2	65	40	12	300	192	7-1/16	7	-	

6. Pressure Class

A : CLASS 150
B : CLASS 300
C : CLASS 600
D : CLASS 900
E : CLASS 1500 (3000PSI)
F : CLASS 2500 (6000PSI)
G : 2000 PSI
H : 3000 PSI
I : 5000 PSI
J : 10000 PS
K : 15000 PSI
L : 20000 PSI
M : JIS 5K
N : JIS 10K
P : JIS 16K
Q : JIS 20K
R : JIS 30K
S : CLASS 800
T : JIS 210K
U : JIS 280K
V : JIS 350K

7. Option+ Trim + Seat + O-Ring

OPTION		TRIM		SEAT		O-RING	
I.D	Type	I.D	Type	I.D	Type	I.D	Type
A	STANDARD	BLANK (0)	BODY = TRIM	BLANK (0)	PTFE	BLANK (0)	NBR
D	LOCKING DEVICE	1	SS316	1	R.PTFE(G)	1	VITON
G	GEAR ACTUATOR	2	CF8M	2	R.PTFE(C)	2	EPDM
H	METAL SEAT	3	SS316L	3	PEEK	3	KALREZ
M	WELDED OVERLAY	4	SS304	4	PCTFE	4	CR
O	LIFTING LUG	5	A105 + ENP	5	POM	5	SILICON
P	PNE MATIC ACTUATOR	6	A105 + CR	6	DEVLON	6	AED(NBR)
		7	MONEL 400	7	DELIN	7	AED(VITON)
		8	SS316 + HF	8	METAL	8	HNBR
		9	DUPLEX	9	NYLON 6		

8. Material

I.D	MATERIAL	I.D	MATERIAL
BLANK	SS316	AB	AL-BRONZE
304	SS304	M40	MONEL 400
36L	SS316L	625	INCONEL 625
34L	SS304L	825	INCONEL 825
F51	A182 F51(Duplex)	276	HASTELLOY 276
F53	A182 F53(Super Duplex)	15	A105
B	BRASS	15N	A105N
BZ	BRONZE	LF2	A350 LF2

Flanged Ball Valves

SUPERLOK®

SAE J518 & ISO 6164 Flanged Ball Valve

SBVE Seriesv

www.superlok.com

SAE J518 & ISO 6164 Flanged Ball Valve

Specification

- Dual pattern Code 61 & 62
- Compact design
- Blow out proof stem
- Fire safety design
  - API 607 / BS 6755 PART 2
- End connection
  - SAE J518 Code 61 & 62 Flanged
  - ISO 6164 Flanged
- Pressure Rating
  - SAE J518 CODE 61 : 3000psi
  - SAE J518 CODE 62 : 6000psi
  - ISO 6164 : PN250, PN400
- Temperature range
  - -20°C ~ 100°C

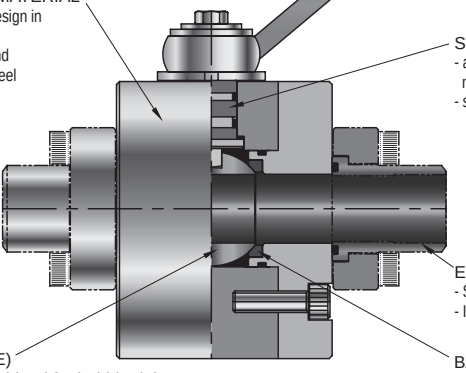

SBVE Series

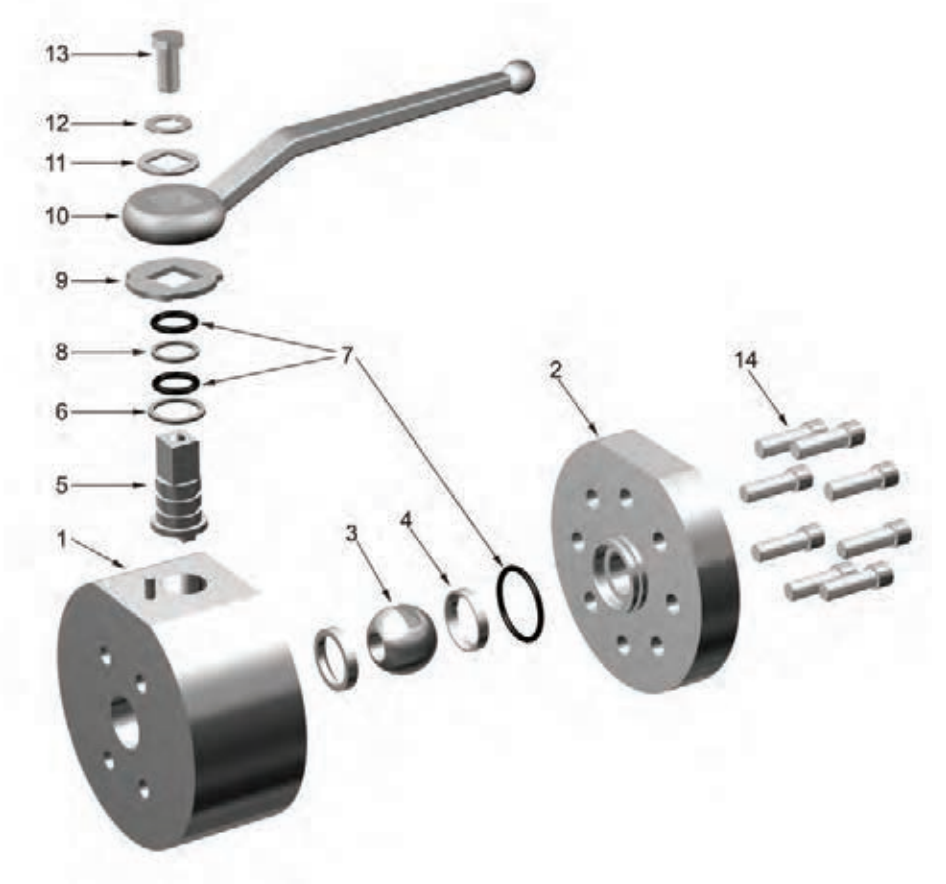

NO.	PART NAME
1	BODY
2	BODY CAP
3	BALL
4	BALL SEAT
5	STEM
6	THRUST WASHER
7	O-RING
8	BACKUP RING
9	LOCKING DEVICE
10	HANDLE
11	STEM WASHER
12	WASHER
13	STEM BOLT
14	BODY BOLT

SBVE - SAE30/60 Series

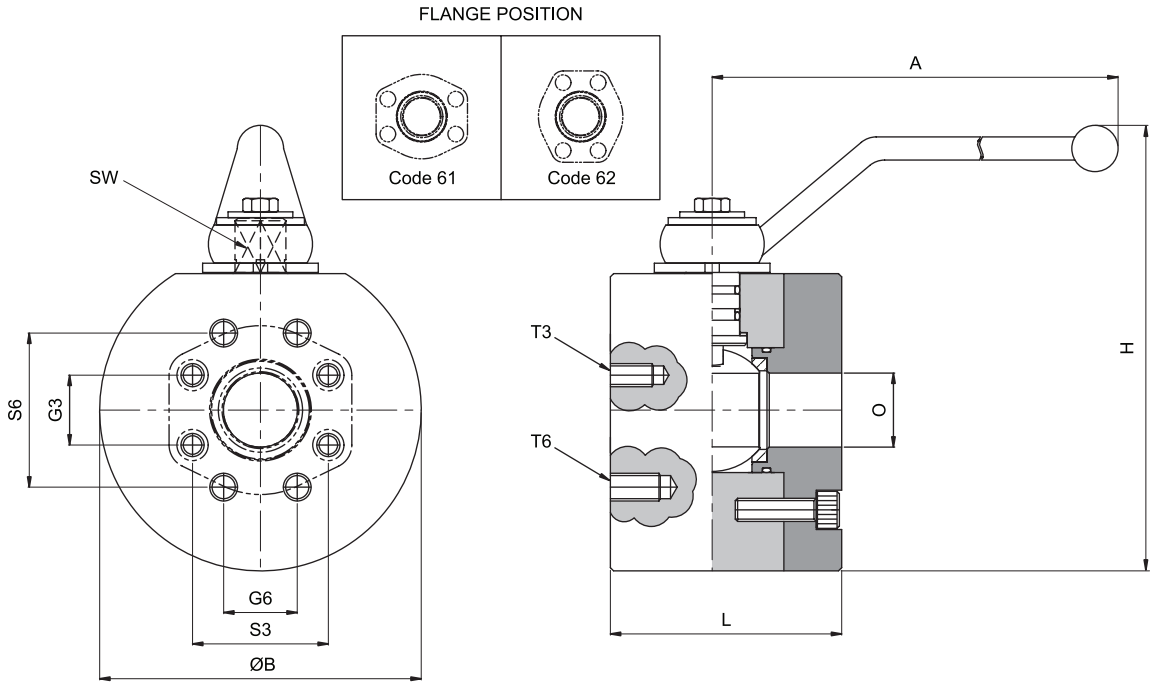

Table of dimensions

SAE J518 CODE 61 (3000psi)

Part Number	Nominal Flange Size (inch)	DN	Nominal Working Pressure (bar)	O	A	ØB	H	L	T3 METRIC (UNC)	S3	G3	SW
SBVE - 15 - SAE30	1/2″	15	210	15	160	78	130	75	M8 (5/16″UNC)	38.10	17.48	12
SBVE - 20 - SAE30	3/4″	20	210	19	200	98	155	80	M10 (3/8″UNC)	47.63	22.23	14
SBVE - 25 - SAE30	1″	25	210	25	200	118	170	88	M10 (3/8″UNC)	52.37	26.19	14
SBVE - 32 - SAE30	1-1/4″	32	210	32	250	145	205	100	M10 (7/16″UNC)	58.72	30.18	17
SBVE - 40 - SAE30	1-1/2″	40	210	38	250	165	230	110	M12 (1/2″UNC)	69.85	35.71	17
SBVE - 50 - SAE30	2″	50	210	48	300	198	255	116	M12 (1/2″UNC)	77.77	42.88	19
SBVE - 65 - SAE30	2-1/2″	65	210	63	300	198	260	150	M12 (1/2″UNC)	88.90	50.80	19
SBVE - 80 - SAE30	3″	80	210	76	350	210	280	180	M16 (5/8″UNC)	106.38	61.93	24
SBVE - 100 - SAE30	4″	100	210	88	400	258	345	200	M16 (5/8″UNC)	130.18	77.77	24

SAE J518 CODE 62 (6000psi)

Part Number	Nominal Flange Size (inch)	DN	Nominal Working Pressure (bar)	O	A	ØB	H	L	T6 METRIC (UNC)	S6	G6	SW
SBVE - 15 - SAE60	1/2″	15	420	13	160	78	130	75	M8 (5/16″UNC)	40.49	18.24	12
SBVE - 20 - SAE60	3/4″	20	420	19	200	98	155	80	M10 (3/8″UNC)	50.80	23.80	14
SBVE - 25 - SAE60	1″	25	420	25	200	118	170	88	M12 (7/16″UNC)	57.15	27.76	14
SBVE - 32 - SAE60	1-1/4″	32	420	32	250	145	205	100	M14 (1/2″UNC)	66.68	31.75	17
SBVE - 40 - SAE60	1-1/2″	40	420	38	250	165	230	120	M16 (5/8″UNC)	79.38	36.50	17
SBVE - 50 - SAE60	2″	50	420	43	300	198	255	130	M20 (3/4″UNC)	96.82	44.45	19
SBVE - 65 - SAE60	2-1/2″	65	420	60	300	198	260	150	M24 (1″UNC)	123.80	58.80	19
SBVE - 80 - SAE60	3″	80	420	63	350	210	280	180	M30 (1-1/8″UNC)	152.40	71.60	24

• All dimensions in millimeters unless specified as “inch”. Dimension are for reference only, subject to change.

SBVE - ISO25/40 Series

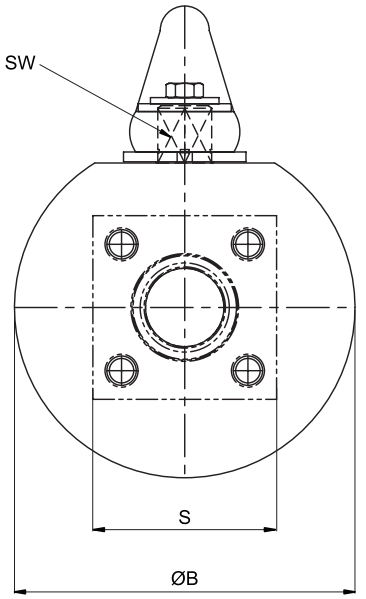

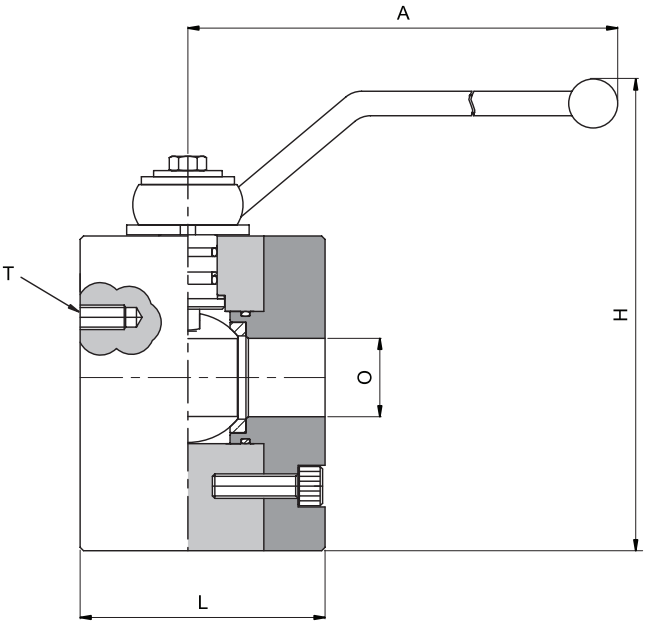

Table of dimensions

ISO 6164-2 (250bar)

Part Number	Nominal Flange Size (inch)	DN	Nominal Working Pressure (bar)	O	A	ØB	H	L	T METRIC (UNC)	S	SW
SBVE - 15 - ISO25	1/2″	15	250	15	160	79	130	75	M10 (3/8″UNC)	60	12
SBVE - 20 - ISO25	3/4″	20	250	19	200	99	155	80	M12 (7/16″UNC)	70	14
SBVE - 25 - ISO25	1″	25	250	25	200	118	170	88	M12 (7/16″UNC)	80	14
SBVE - 32 - ISO25	1-1/4″	32	250	32	250	139	205	100	M16 (5/8″UNC)	90	17
SBVE - 40 - ISO25	1-1/2″	40	250	38	250	160	230	110	M16 (5/8″UNC)	90	17
SBVE - 50 - ISO25	2″	50	250	48	300	179	255	116	M16 (5/8″UNC)	100	19

ISO 6164-2 (400bar)

Part Number	Nominal Flange Size (inch)	DN	Nominal Working Pressure (bar)	O	A	ØB	H	L	T METRIC (UNC)	S	SW
SBVE - 15 - ISO40	1/2″	15	400	13	160	79	130	75	M10 (3/8″UNC)	60	12
SBVE - 20 - ISO40	3/4″	20	400	19	200	99	155	80	M10 (3/8″UNC)	60	14
SBVE - 25 - ISO40	1″	25	400	25	200	119	170	88	M12 (7/16″UNC)	70	14
SBVE - 32 - ISO40	1-1/4″	32	400	32	250	139	205	100	M12 (7/16″UNC)	80	17
SBVE - 40 - ISO40	1-1/2″	40	400	38	250	160	230	120	M16 (5/8″UNC)	90	17
SBVE - 50 - I40	2″	50	400	43	300	179	255	130	M16 (5/8″UNC)	100	19

• All dimensions in millimeters unless specified as “inch”. Dimension are for reference only, subject to change.

Material of Construction

Component	Valve Body Materials	
	Stainless Steel	Carbon Steel
Body	A182 F316	A105 + Zinc plated
Body Cap		
Stem	A479 TP 316	A105 + Hard Cr
Ball		
Ball Seats	POM - MoS2	
Stem / Connector Seals	VITON / NBR / GRAPHITE	
Handle	A351 CF8M / A276 TP316	A216 WCB / A105+Zinc plated
Locking Device	Stainless Steel	

Application

- Pipeline construction
- Machine tool
- System engineering
- Off - shore sector
- Marine hydraulic
- Power units
- Oil & Gas refinery rings

Ordering Information

Example : **SBVE - 15 - SAE30 - N - SS**

1 2 3 4 5 6

1. Valve Series
SBVE

2. Connection Size

Size (inch)	1/2	3/4	1	1-1/4	1-1/2
Identify	15	20	25	32	40
Size (inch)	2	2-1/2	3	4	5
Identify	50	65	80	100	125

3. Connection Type
SAE : SAE J518 Code 61 / 62
ISO : ISO 6164 - 2

4. Nominal Pressure
30 : 3000psi
60 : 6000psi
25 : 250bar
40 : 400bar

5. Stem Seal
(BLANK) : VITON
N : NBR

6. Body Material
(BLANK) : Stainless Steel
C : Carbon Steel

SAE J518 & ISO 6164 Flanged Ball Valves

www.sks-online.com

SUPERLOK®

Forged Steel Valves

Gate & Globe Valves / Check Valves

www.superlok.com

Forged Steel Gate & Globe Valves

ASME Classes : 150 ~ 2500
Sizes : 1/2" ~ 6"(15mm ~ 150mm)

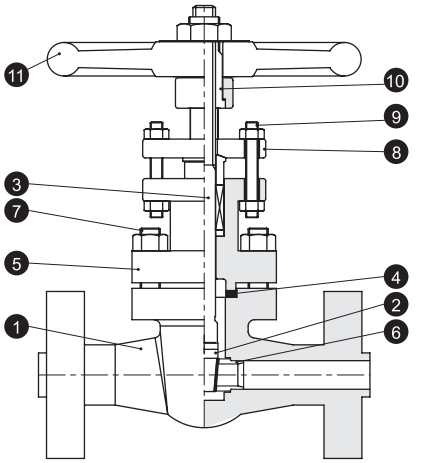

GATE VALVE

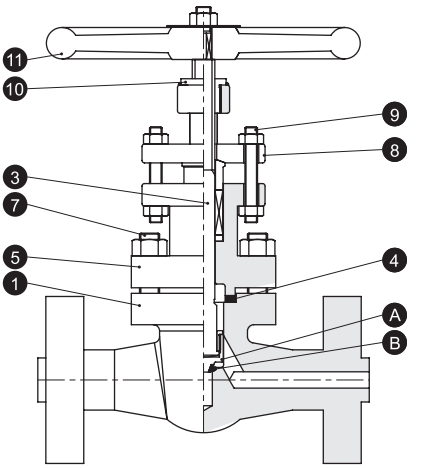

GLOBE VALVE

Features

1. Body
The body is forged steel and designed to the basic dimensional requirements of the applicable specifications such as API602 and ASME B16.34. The body is available in both the full or conventional port design.

2. Wedge
The wedge, which is solid design, is forged or investment cast steel and is part of the valve trim. The seating surfaces are ground and lapped.

A. Disc
The disc is forged steel and is part of the valve trim. The disc seating surface is of the tapered or plug type design. The disc is attached to the stem using a loose or swivel disc arrangement.

3. Stem
The stem is forged steel and is part of the valve trim. It contains an integral back seat shoulder, which mates with the integral backseat of the bonnet. The stem is designed to the basic dimensional requirements of the applicable specifications such as API602.

4. Gasket
The bolted bonnet joint design valve uses a contained, controlled compression, spiral wound type gasket.

5. Bonnet
The bonnet is forged steel, has an integral backseat and incorporates the stuffing box, shich has dimensions per the applicable specifications such as API602.

B. Seat
The body seat is an integral weld overlay and is part of the valve trim.

6. Seatring
The seatring are steel and makeup part of the valve trim. They are pressed into the valve body and wedged into place, forming a seal with the body. The seating surfaces are ground and lapped.

7. Bonnet Bolting
The bonnet bolting is manufactured of alloy steel in accordance with the requirements of the applicable specifications such as API602 and ASME B16.34.

8. Gland & Flange
The gland, gland flange assembly utilizes a separate, two piece design.this self aligning design allows the flange to be unevenly tightened while the gland maintains its parallel alignment with the stem and stuffing box.

9. Gland Bolts & Nuts
The steel/stainless steel gland bolt and nut assembly is a stud, double nut arrangement. This design allows complete removal from the valve when service is required. The use of industry standard thread full length studs and nuts also allows easy replacement should these items be lost or in need of replacement.

10. Sleeve
The sleeve is of forged stainless steel material having a high melting point and is resistant to wear and corrosion.

11. Handle
The handle is forged carbon steel of an open spoke design. This robust construction along with appropriate sizing allows for ease of operation.

Forged Steel Gate Valves

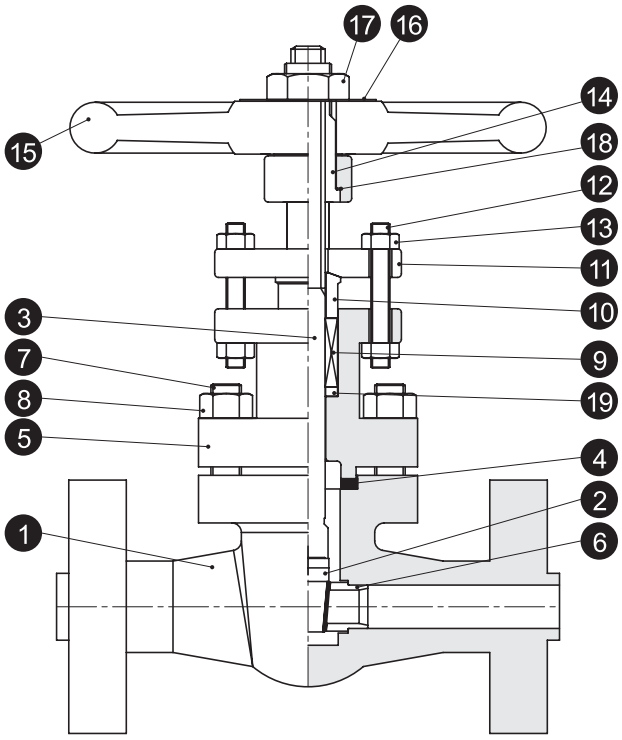

- Forged steel, outside screw and yoke(OS & Y)
- Rising stem, non-rising handwheel.
- Full or conventional port
- Bolted bonnet joint.
- Integral backseat.

Features

Size : 1/2" ~ 6"
Classes : 150 ~ 2500
Forged Steel Body & Bonnet
Full Bore / Reduce Bore

Specifications

Design	ASME B16.34 / API 6D
Face to Face	ASME B16.10
End Flange	ASME B16.5
BW End	ASME B16.25
Thread / Socket End	ASME B1.20.1 / B16.11
Test	API 598

Material of Specification

No.	Component	Material	
		Stainless Steel	Carbon Steel
1	BODY	A182 F316	A105
2	DISC	A276 316 (+ HF)	A276 410 (+ HF)
3	STEM	A276 316	A276 410
4	GASKET	316 / GRAPHITE	316 / GRAPHITE
5	BONNET	A182 F316	A105
6	SEAT RING	A276 316 (+ HF)	A276 410 (+ HF)
7	BONNET BOLT	A193 B8M	A193 B7
8	BONNET NUT	A194 8M	A194 2H
9	PACKING	GRAPHITE	GRAPHITE
10	PACKING GLAND	A276 316	A276 410
11	GLAND FLANGE	A276 316	A276 410
12	GLAND BOLT	A193 B8M	A193 B7
13	GLAND NUT	A194 8M	A194 2H
14	SLEEVE	A276 316	A276 410
15	HANDWHEEL	A47	A47
16	NAME PLATE	STAINLESS STEEL	STAINLESS STEEL
17	WHEEL NUT	A194 8	A307 B
18	SLEEVE WASHER	A276 316	A276 410
19	SUPPORT RING	A276 316	A276 410

Bolted Bonnet Gate Dimensions

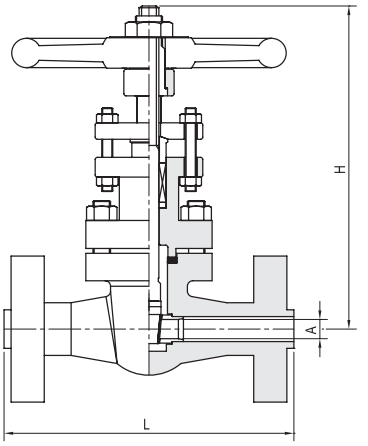

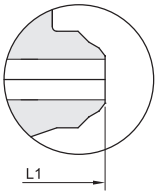

BW END

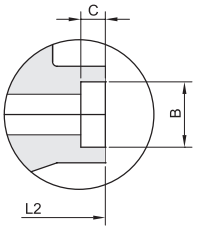

SW END

Class 150

Size (Inch)	L Face To Face	L1 End To End	L2 Socket Weld	A Port	H Center to Top Open	W Handwheel	B Socket Weld Bore	C Socket Weld Depth
1/2	108	108	79	13	180	100	21.42	10
3/4	117	117	92	19	180	100	27.05	13
1	127	127	111	25	220	125	33.78	13
1-1/4	140	140		32	320	160	42.55	13
1-1/2	165	165		38	320	160	48.64	13
2	178	216		49	355	180	61.11	16
2-1/2	190	241	-	62	400	224	-	-
3	203	282	-	74	440	224	-	-
4	229	305	-	100	550	224	-	-
6	267	403	-	150	780	300	-	-

Class 300

Size (Inch)	L Face To Face	L1 End To End	L2 Socket Weld	A Port	H Center to Top Open	W Handwheel	B Socket Weld Bore	C Socket Weld Depth
1/2	140	140	79	13	180	100	21.72	10
3/4	152	152	92	19	180	100	27.05	13
1	165	165	111	25	220	125	33.78	13
1-1/4	178	178	120	32	320	160	42.55	13
1-1/2	190	190	120	38	320	160	48.64	13
2	216	216	140	49	355	180	61.11	16
2-1/2	241	241	-	62	450	224	-	-
3	282	282	-	74	455	224	-	-
4	305	305	-	100	560	224	-	-
6	403	403	-	150	580	300	-	-

Class 600

Size (Inch)	L Face To Face	L1 End To End	L2 Socket Weld	A Port	H Center to Top Open	W Handwheel	B Socket Weld Bore	C Socket Weld Depth
1/2	165	165	79	13	180	100	21.72	10
3/4	190	190	92	19	180	100	27.05	13
1	216	216	111	25	220	125	33.78	13
1-1/4	229	229	120	32	320	160	42.55	13
1-1/2	241	241	120	38	320	160	48.64	13
2	292	292	140	49	355	180	61.11	16
2-1/2	330	330	-	62	420	224	-	-
3	356	356	-	74	465	260	-	-
4	432	432	-	100	660	300	-	-
6	559	559	-	150	880	400	-	-

Class 900/1500

Size (Inch)	L Face To Face	L1 End To End	L2 Socket Weld	A Port	H Center to Top	W Handwheel	B Socket Weld Bore	C Socket Weld Depth
1/2	-	-	111	13	292	125	21.72	10
3/4	-	-	111	19	297	125	27.05	13
1	254	254	120	25	359	180	33.78	13
1-1/4	279	279	140	32	380	180	42.55	13
1-1/2	305	305	140	38	413	180	48.64	13
2	368	368	144	49	546	180	61.11	16

Class 2500

Size (Inch)	L Face To Face	L1 End To End	L2 Socket Weld	A Port	H Center to Top	W Handwheel	B Socket Weld Bore	C Socket Weld Depth
1/2	264	264	264	13	346	150	21.72	10
3/4	273	273	273	19	353	200	27.05	13
1	308	308	308	25	400	200	33.78	13
1-1/4	349	349	349	32	440	200	42.55	13
1-1/2	384	384	384	38	540	250	48.64	13
2	451	451	451	42	583	300	61.11	16

• All dimensions in millimeters unless specified as “inch”. Dimension are for reference only, subject to change.

Forged Steel Globe Valves

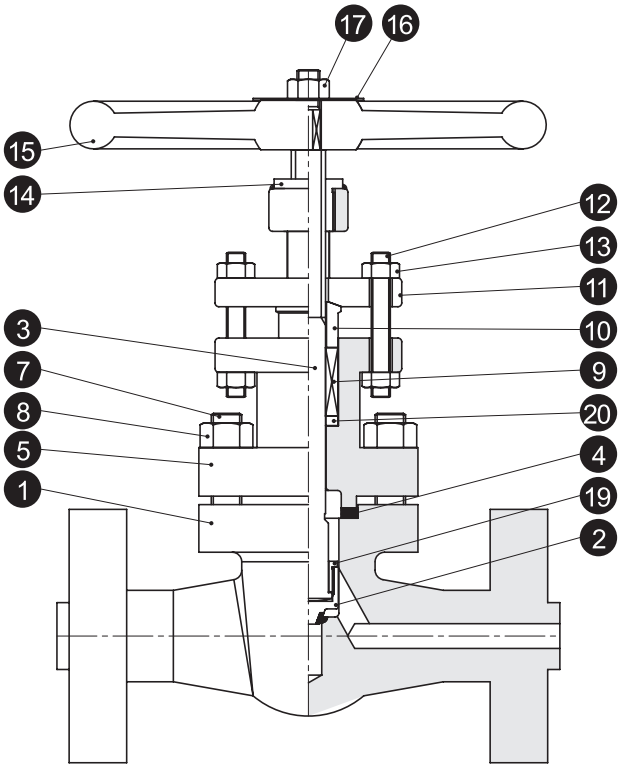

- Forged steel, outside screw and yoke(OS & Y)
- Rotating rising stem, rising handwheel.
- Full or conventional port .
- Bolted bonnet joint.
- Integral backseat, Integral body seat.

Class 150

Size : 1/2" ~ 6"
Classes : 150 ~ 2500
Forged Steel Body & Bonnet
Full Bore / Reduce Bore

Specifications

Design	ASME B16.34 / BS1873
Face to Face	ASME B16.10
End Flange	ASME B16.5
BW End	ASME B16.25
Thread / Socket End	ASME B1.20.1 / B16.11
Test	API 598

Material of Specification

No.	Component	Material	
		Stainless Steel	Carbon Steel
1	BODY	A182 F316 (+ HF)	A105 (+ HF)
2	DISC	A276 316 (+ HF)	A276 410 (+ HF)
3	STEM	A276 316	A276 410
4	GASKET	316 / GRAPHITE	316 / GRAPHITE
5	BONNET	A182 F316	A105
7	BONNET BOLT	A193 B8M	A193 B7
8	BONNET NUT	A194 8M	A194 2H
9	PACKING	GRAPHITE	GRAPHITE
10	PACKING GLAND	A276 316	A276 410
11	GLAND FLANGE	A276 316	A276 410
12	GLAND BOLT	A193 B8M	A193 B7
13	GLAND NUT	A194 8M	A194 2H
14	YOKE SLEEVE	A276 316	A276 410
15	HANDWHEEL	A47	A47
16	NAME PLATE	STAINLESS STEEL	STAINLESS STEEL
17	WHEEL NUT	A194 8	A307 B
19	DISC NUT	A276 316	A276 410
20	SUPPORT RING	A276 316	A276 410

Bolted Bonnet Globe Dimensions

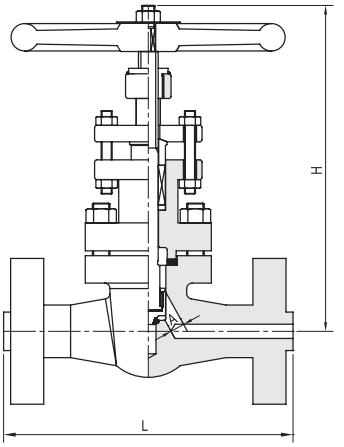

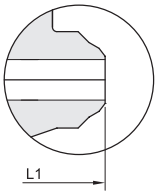

BW END

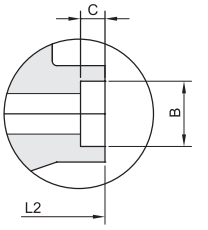

SW END

Class 150

Size Inch	L Face To Face	L1 End To End	L2 Socket Weld	A Port	H Center to Top Open	W Handwheel	B Socket Weld Bore	C Socket Weld Depth
1/2	108	108	79	13	220	100	21.42	10
3/4	117	117	92	19	220	100	27.05	13
1	127	127	111	25	260	125	33.78	13
1-1/4	140	140	152	32	355	160	42.55	13
1-1/2	165	165	152	38	355	160	48.64	13
2	178	216	172	49	355	180	61.11	16
2-1/2	190	241	-	62	370	224	-	-
3	203	282	-	74	400	224	-	-
4	229	305	-	100	480	224	-	-
6	267	403	-	150	600	300	-	-

Class 300

Size Inch	L Face To Face	L1 End To End	L2 Socket Weld	A Port	H Center to Top Open	W Handwheel	B Socket Weld Bore	C Socket Weld Depth
1/2	140	140	79	13	220	100	21.72	10
3/4	152	152	92	19	220	100	27.05	13
1	165	165	111	25	260	125	33.78	13
1-1/4	178	178	152	32	355	160	42.55	13
1-1/2	190	190	152	38	355	160	48.64	13
2	216	216	172	49	355	180	61.11	16
2-1/2	241	241	-	62	400	224	-	-
3	282	282	-	74	440	224	-	-
4	305	305	-	100	500	224	-	-
6	403	403	-	150	600	300	-	-

Class 600

Size Inch	L Face To Face	L1 End To End	L2 Socket Weld	A Port	H Center to Top Open	W Handwheel	B Socket Weld Bore	C Socket Weld Depth
1/2	165	165	79	13	220	100	21.72	10
3/4	190	190	92	19	220	100	27.05	13
1	216	216	111	25	260	125	33.78	13
1-1/4	229	229	152	32	355	160	42.55	13
1-1/2	241	241	152	38	355	160	48.64	13
2	292	292	172	49	355	180	61.11	16
2-1/2	330	330	-	62	430	224	-	-
3	356	356	-	74	485	260	-	-
4	432	432	-	100	600	300	-	-
6	559	559	-	150	780	400	-	-

Class 900/1500

Size Inch	L Face To Face	L1 End To End	L2 Socket Weld	A Port	H Center to Top	W Handwheel	B Socket Weld Bore	C Socket Weld Depth
1/2	-	-	111	13	280	170	21.72	10
3/4	-	-	111	19	284	170	27.05	13
1	254	254	120	25	345	250	33.78	13
1-1/4	279	279	140	32	360	250	42.55	13
1-1/2	305	305	140	38	400	250	48.64	13
2	368	368	144	49	520	350	61.11	16

Class 2500

Size Inch	L Face To Face	L1 End To End	L2 Socket Weld	A Port	H Center to Top	W Handwheel	B Socket Weld Bore	C Socket Weld Depth
1/2	264	264	264	13	320	250	21.72	10
3/4	273	273	273	19	336	250	27.05	13
1	308	308	308	25	390	250	33.78	13
1-1/4	349	349	349	32	420	400	42.55	13
1-1/2	384	384	384	38	520	400	48.64	13
2	451	451	451	42	555	400	61.11	16

• All dimensions in millimeters unless specified as “inch”. Dimension are for reference only, subject to change.

Forged Steel Check Valves

ASME Classes : 150 ~ 600
Sizes : 1/2" ~ 2"(15mm ~ 50mm)

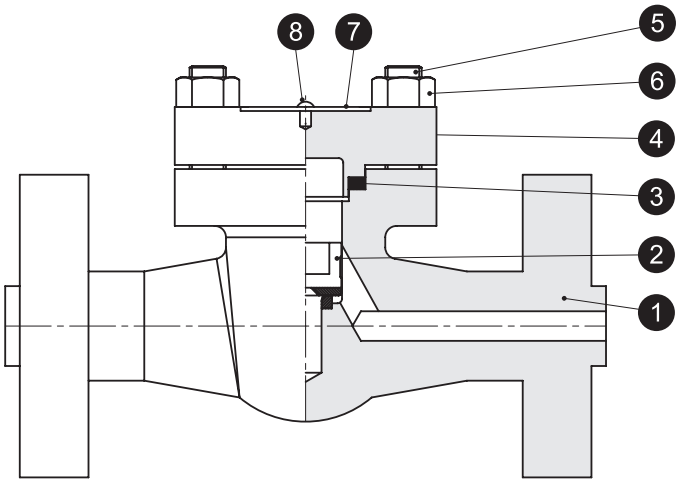

- Forged steel.
- Full or conventional port
- Bolted bonnet joint.
- Integral body seat for piston or ball check.
- Separate seatring design for the swing check valve.

Material of Specification

No.	Component	Material	
		Stainless Steel	Carbon Steel
1	Body	A182 F316	A105
2	Disc	A276 316	A276 410
3	Gasket	316 / GRAPHITE	316 / GRAPHITE
4	Bonnet	A276 316	A276 410
5	Bonnet Bolt	A193 B8M	A193 B7
6	Bonnet Nut	A194 8M	A194 2H
7	Name Plate	Stainless Steel	Stainless Steel
8	Rivet	SS 316	SS 316

Features

1. Body
The body is forged steel and designed to the basic dimensional requirements of the applicable specifications such as API602 and ASME B16.34. The body is available in both the full or conventional port design.

2. Piston, Ball or Disc
The piston, ball or disc is forged steel and is part of the valve trim. The seating surface of the piston and ball check is of the tapered or plug type design. The seating surface of the swing check is of the flat seat design.

3. Gasket
The bolted bonnet joint design valve uses a contained, controlled compression, spiral wound type gasket.

4. Bonnet
The bonnet is forged steel and designed to the basic dimensional requirements of the applicable specifications such as API602 and ASME B16.34.

5. Seat
The body seat for the piston and ball check valves is an integral weld overlay and is part of the valve trim. The swing check valve is supplied with a separate seatring which is pressed into the valve body and wedged into place, forming a seal with the body.

6. Bonnet Bolting
The bonnet bolting is manufactured of alloy steel in accordance with the requirements of the applicable specifications such as API602 and ASME B16.34.

7. Spring
The spring is optional and supplied only upon request.

Bolted Bonnet Lift Check Dimensions

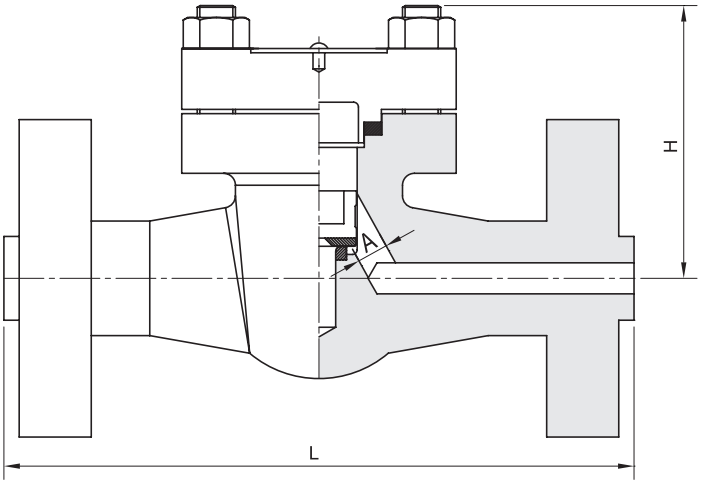

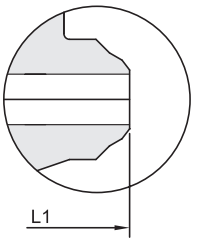

BW END

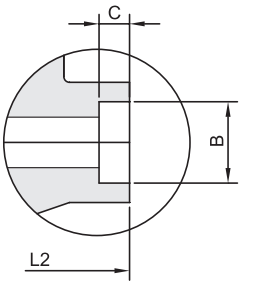

SW END

Class 150

Size (Inch)	L Face To Face	L1 End To End	L2 Socket Weld	A Port	H Center to Top	B Socket Weld Bore	C Socket Weld Depth
1/2	108	108	79	13	48	21.72	10
3/4	117	117	92	19	48	27.05	13
1	127	127	111	25	63	33.78	13
1-1/4	140	140	152	32	85	42.55	13
1-1/2	165	165	152	38	85	48.64	13
2	178	216	172	49	104	61.11	16

Class 300

Size (Inch)	L Face To Face	L1 End To End	L2 Socket Weld	A Port	H Center to Top	B Socket Weld Bore	C Socket Weld Depth
1/2	140	140	79	13	48	21.72	10
3/4	152	152	92	19	48	27.05	13
1	165	165	111	25	63	33.78	13
1-1/4	178	178	152	32	85	42.55	13
1-1/2	190	190	152	38	85	48.64	13
2	216	216	172	49	104	61.11	16

Class 600

Size (Inch)	L Face To Face	L1 End To End	L2 Socket Weld	A Port	H Center to Top	B Socket Weld Bore	C Socket Weld Depth
1/2	165	165	79	13	48	21.72	10
3/4	190	190	92	19	48	27.05	13
1	216	216	111	25	63	33.78	13
1-1/4	229	229	152	32	85	42.55	13
1-1/2	241	241	152	38	85	48.64	13
2	292	292	172	49	104	61.11	16

• All dimensions in millimeters unless specified as “inch”. Dimension are for reference only, subject to change.

Ordering Information

Example 1 :

FLC	C	RF	1	-	16	-	G	(-SS)
1	2	3	4		5		6	7

Example 2 :

FGB	C	8S	RF	2	-	16	-	36L
1	2	3	3	4		5		7

Example 3 :

FGT	A	SW	FN	2	-	8	-	36L
1	2	3	3	4		5		7

1. Valve

Valve	Lift Check	Globe	Gate
Designation	FLC	FGB	FGT

2. Pressure Rating

Class	150	300	600	900	1500	2500
Designation	A	B	C	D	E	F

3. End Connection

Flange	Raised Face	Ring Joint	Flat Face
Designation	RF	RJ	FF

Butt Weld	Sch10S	Sch20S	Sch40S	Sch80S	Sch160	SchXXS
Designation	1S	2S	4S	8S	16	DS

Type	Socket Weld	Male NPT	Male PT	Female NPT	Female PT
Designation	SW	MN	MR	FN	FR

4. Bore

Bore	Full Bore	Reduced Bore	Double Reduced Bore
Designation	1	2	3

5. Size

Size	1/2"	3/4"	1"	1-1/4"	1-1/2"	2"	2-1/2"	3"	4"	5"	6"
Designation	8	12	16	20	24	32	40	48	64	80	96

6. Option

Option	Gear Actuator
Designation	G

7. Material

Material	A182-F316 / A351-CF8M	A182-F316L / A351-CF3M
Designation	Blank	36L

Forged Steel Valves

www.sks-online.com

SUPERLOK®

Integral Block & Bleed Valves

www.superlok.com

Introduction

SUPERLOK's response to the demand for reduction in leakage paths has been the combination of primary and secondary valves into one compact unit. The combining of piping and instrument valves into a single unit has benefitted various markets.
SUPERLOK can offer the special combination of double block and bleed valve systems together with fittings, both being designed and produced by BMT. Choice of this combination results in the elimination of taper thread connections and the need for thread sealant.

Application & Installation

Solutions

SUPERLOK instrumentation products provided the ultimate suitable solutions for a integral block & bleed valve, which is consist of one piece forged body it provide many merits, featuring a choice of end connections, body style and valve technology

Conventional Installation <1>

A welded flange, connected to a primary ANSI class isolating valve. The primary valve will be connected to a secondary instrument valve. A pressure gauge or transmitter will then be installed downstream of the instrument valve.

SUPERLOK Block & Bleed Valve <2>

- A one-piece integral forging incorporating up 3 ball valve or mixture of ball and needle design.
- Improved safety : leak paths reduced by up to 60%
- Reduced costs : installation and component costs reduced by up to 70%
- Reduced weight : by up to 80%
- Reduced susceptibility to problems caused by vibration.

SUPERLOK Monoflange <3>

- More compact then SUPERLOK DBB valve, adding further space and weight saving possibilities.
- Improved safety : leak paths reduced by up to 60%, less susceptibility to vibration
- Reduced costs : installation and component costs saving up to 80%
- Reduced weight : up to 85%

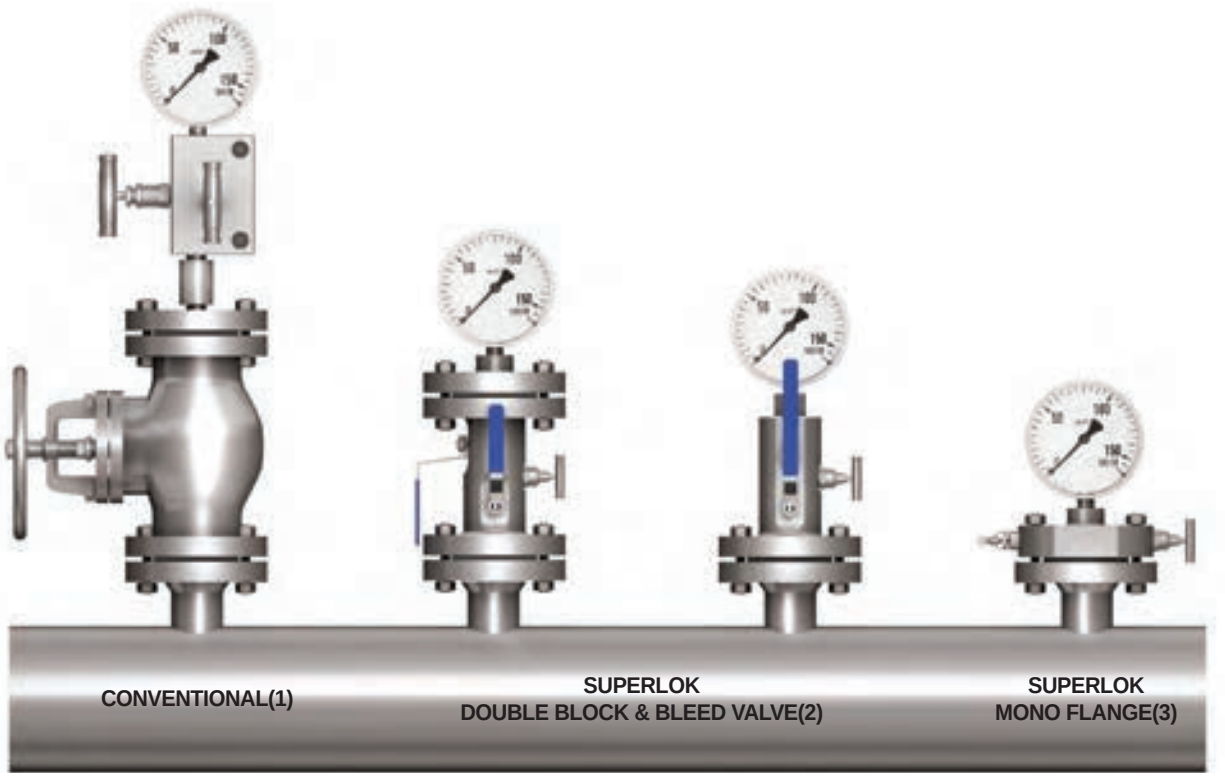

Specification

Design codes

- ANSI / ASME B 16.34 - Designed to meet the pressure and temperature requirements
- ANSI / ASME B 16.5 - Flange dimensions
- ANSI / ASME B 1.20.1 - National pipe threads
- API 607 / BS 6755 - Fire safe designed

Ball Valve

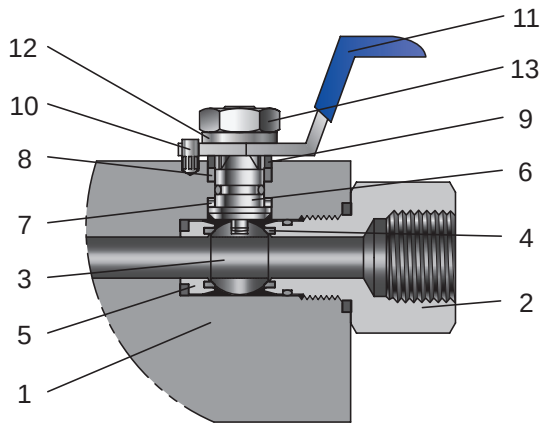

	DESCRITION	BODY MATERIAL		
		STAINLESS STEEL	CARBON STEEL	DUPLEX STAINLESS STEEL
1	VALVE BODY	A182 F316	A350 LF2	A182 F51
2	OULET CONNECTOR	A276 TP316	A350 LF2	A182 F51
3	BALL	A479 TP316		S31803
4	BALL SEAT	PTFE / R.PTFE / PEEK / ETC		
5	SEAT CAPSULE	A276 TP316		S31803
6	STEM	A276 TP316		S31803
7	LOWER STEM SEAL	PTFE		
8	UPPER STEM SEAL	GRAPHITE		
9	PACKING GLAND	A276 TP316		S31803
10	STOP PIN	A276 TP316		S31803
11	HANDLE	STAINLESS STEEL		
12	STEM WASHER	STAINLESS STEEL		
13	STEM NUT	A194 8M		

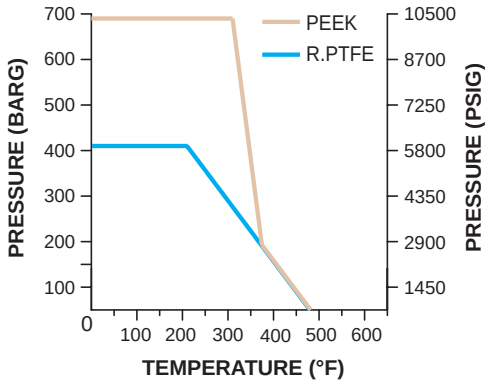

- 316 Stainless steel as standard.
- Pressure rating up to 10,000 psig (690bar).
- Temperature rating -71°F to 482°F (-57°C to 250°C).

Features

- One piece or two piece body design -minimize leakage paths.
- Ball seat choice of seat materials : PTFE (virgin or filled) , PCTFE , PEEK.
- End connector threads are fully isolated from process.
- Fully encapsulated ball seat.
- Superior finished ball for low operating torque.
- Floating ball design providing seat wear compensation.
- Anti static design as standard.
- Blowout proof stem design.
- Colour coded & function identified handle.
- Bore size : Full bore, Reducer bore , 10mm , 14mm , 20mm.
- Optional : handle locking available , NACE compliance.

Outside Screw and Yoke(OS&Y) Needle Valve

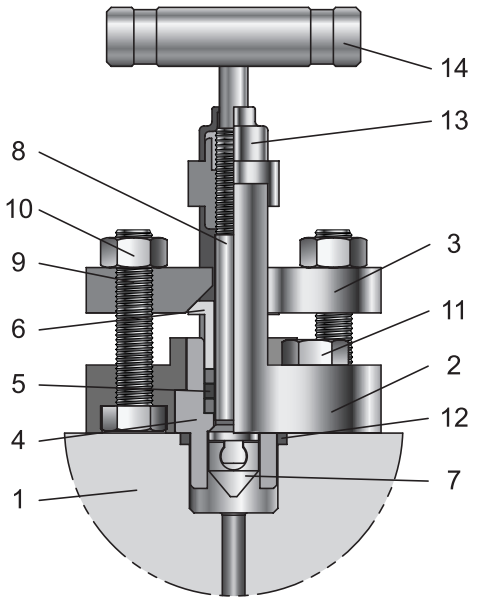

DESCRITION		BODY MATERIAL		
		STAINLESS STEEL	CARBON STEEL	DUPLEX STAINLESS STEEL
1	VALVE BODY	A182 F316	A350 LF2	A182 F51
2	OS & Y BONNET	A351 CF8M	A352 LCC	A182 F51
3	GLAND FLANGE	A351 CF8M	A352 LCC	A182 F51
4	INSERT	A276 TP316		S31803
5	PACKING	GRAPHITE		
6	BUSHING	A276 TP316		S31803
7	VEE TIP	A564 TP630		
8	STEM	A276 TP316		S31803
9	FLANGE BOLT	A193 B8M	A320 L7M	A453 Gr.660
10	FLANGE NUT	A194 8M	A194 Gr.7	
11	BONNET BOLT	A193 B8M	A320 L7M	
12	BONNET SEAL	GRAPHITE		
13	DUST CAP	NYLON		
14	BAR HANDLE	A276 TP316		S31803

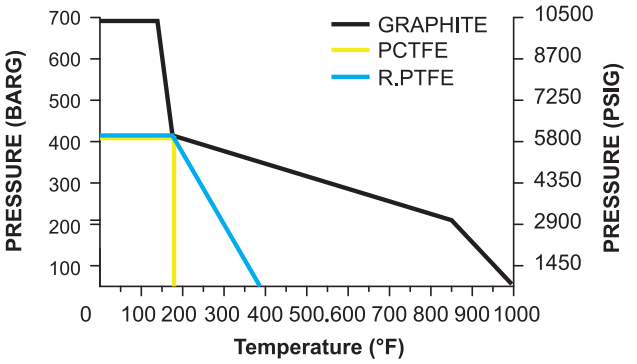

- 316 Stainless steel as standard.
- Pressure rating up to 10,000 psig (690bar).
- Temperature rating -65°F to 1000°F (-54°C to 538°C).

Features

- Externally adjustable gland.
- PTFE or Graphite packing for bubble tight sealing.
- Self centering crimped needle tip for bubble tight shut off and repeatability.
- Back seat design provides secondary stem sealing and prevents stem blow out.
- Colour coded close contact dust cap and function label for easy indentification.
- Bonnet seal ensure a bubble tight between body and bonnet.
- Stem threads are completely isolated from the process.
- Yoke of investment casting is precision casted for strength and perfect stem alignment.
- Bolted bonnet for strength.

Globe Style Needle Valve

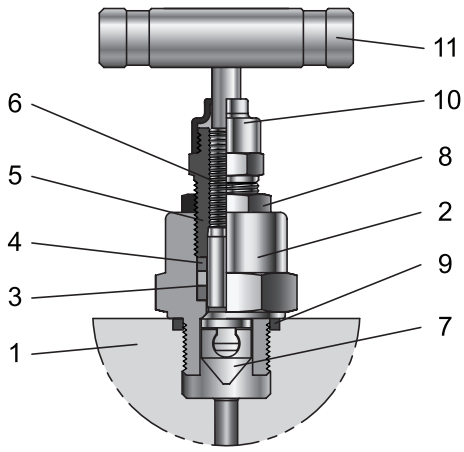

	DESCRITION	BODY MATERIAL		
		STAINLESS STEEL	CARBON STEEL	DUPLEX STAINLESS STEEL
1	BODY	A276 TP316	A350 LF2	A182 F51
2	BONNET	A276 TP316	A350 LF2	A182 F51
3	PACKING	GRAPHITE		
4	PACKING GLAND	A276 TP316		S31803
5	PACKING BOLT	A276 TP316	A350 LF2	S31803
6	STEM	A276 TP316		S31803
7	VEE TIP	A564 TP630		
8	LOCK NUT	A276 TP316	A350 LF2	S31803
9	BONNET SEAL	GRAPHITE		
10	DUST CAP	NYLON		
11	BAR HANDLE	A276 TP316		S31803

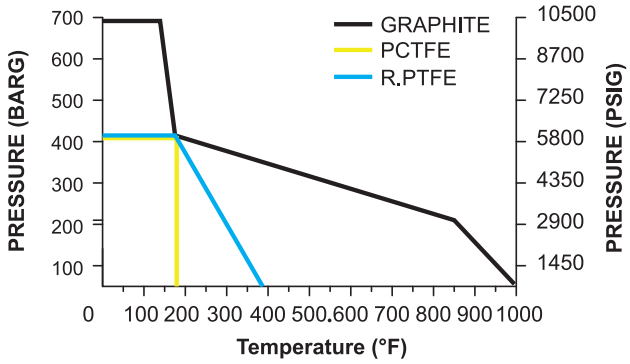

- 316 Stainless steel as standard.
- Pressure rating up to 10,000 psig (690bar).
- Temperature rating -65°F to 1000°F (-54°C to 538°C).

Features

- Rolled stem operating threads for low torque operation.
- Gland packing in PTFE or Graphite for bubble tight sealing.
- Colour coded close contact dust cap and function label for easy identification.
- Self centering crimped needle tip for bubble tight seat sealing.
- Close contact dust cap for operating thread protection.
- Back seat design provides secondary stem sealing and prevents stem blowout.
- Stem threads are completely isolated from the process.
- Packing bolt with easy access.
- Lock nut for vibration protection.

Block & Bleed Valves

Features

- ANSI B16.5 flanged inlet connections 1/2" to 3" sizes Class 150 rated to class 2500 rated.
- 1/2" -1" F.NPT Thread outlet to ANSI/ASME B1.20.1(depending on bore size).
- 1/2" F.NPT Thread vent connection to ANSI/ASME B1.20.1
- Standard materials of Stainless steel
  ASTM A182 F316/F316L, Carbon steel ASTM
  A350 LF2/A105, Duplex ASTM A182 F51.
- Optional materials include Super Duplex, Monel, Hastelloy, Inconel.
- Raised face and ring type joint flange styles.
- One-piece forged construction flange as standard.
- Fire safe designed (and tested) to meet BS 6755 Part 2/API 607.
- DBB & SBB Products meet the relevant code requirement of ASME VIII, ASMEB 16.34, B16.5, B31.3 and API 6D.
- Bubble tight shut off.
- locking and anti tamper devices for all valve types available option.
- Positive lever stop.
- User preferred handles.
- Permanent affixed reference label.

DB1 Series(Flange x FNPT)

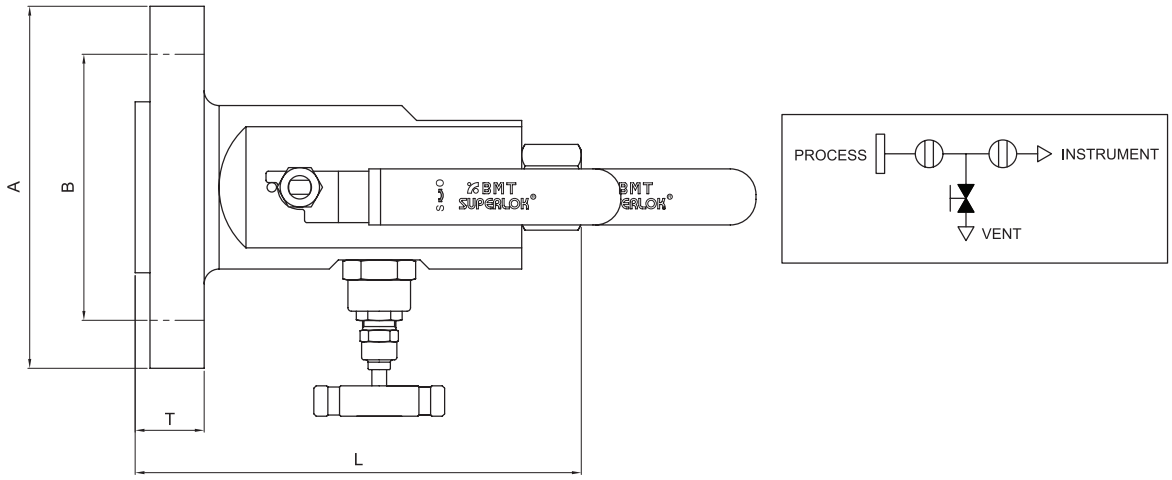

Dimensions

(10mm BORE)

Size (inch)	Rating (lb)	Dimension			
		L (RF)	A	B	T(RF)
1/2 (DN15)	150	170	90	60.3	11.6
	300		95	66.7	14.7
	600	177	95		21.3
	900/1500	191	120	82.5	29.3
	2500	195	135	88.9	37.2
3/4 DN(20)	150	170	100	69.8	13.2
	300	170	115	82.5	16.3
	600	175	115		22.9
	900/1500	190	130	88.9	32.4
	2500	195	140	95.2	38.8
1 (DN25)	150	170	110	79.4	14.7
	300		125	88.9	17.9
	600	175	125		24.5
	900/1500	190	150	101.6	35.6
	2500	195	160	108.0	42.0
1-1/2 (DN40)	150	170	125	98.4	17.9
	300	175	155	114.3	21.1
	600	180	155		29.3
	900/1500	190	180	124.0	38.8
	2500	210	205	146.1	51.5
2 (DN50)	150	172	150	120.6	19.5
	300	177	165	127.0	22.7
	600	190			32.4
	900/1500	200	215	165.1	45.1
	2500	220	235	171.5	57.9

• All dimensions in millimeters unless specified as “inch”. Dimension are for reference only, subject to change.

Dimensions

(14mm BORE)

Size (inch)	Rating (lb)	Dimension			
		L (RF)	A	B	T(RF)
3/4 DN(20)	150	208	100	69.8	13.2
	300		115	82.5	16.3
	600		115		22.9
	900/1500	218	130	88.9	32.4
	2500	224	140	95.2	38.8
1 (DN25)	150	208	110	79.4	14.7
	300		125	88.9	17.9
	600	218	125		24.5
	900/1500	224	150	101.6	35.6
	2500	227	160	108.0	42.0
1-1/2 (DN40)	150	208	125	98.4	17.9
	300	218	155	114.3	21.1
	600		155		29.3
	900/1500	224	180	124.0	38.8
	2500	238	205	146.1	51.5
2 (DN50)	150	218	150	120.6	19.5
	300		165	127.0	22.7
	600	224			32.4
	900/1500	238	215	165.1	45.1
	2500	246	235	171.5	57.9

(20mm BORE)

Size (inch)	Rating (lb)	Dimension			
		L (RF)	A	B	T(RF)
1 (DN25)	150	235	110	79.4	14.7
	300		125	88.9	17.9
	600	244	125		24.5
	900/1500	251	150	101.6	35.6
	2500		160	108.0	42.0
1-1/2 (DN40)	150	235	125	98.4	17.9
	300	244	155	114.3	21.1
	600		155		29.3
	900/1500	251	180	124.0	38.8
	2500	265	205	146.1	51.5
2 (DN50)	150	244	150	120.6	19.5
	300		165	127.0	22.7
	600	251			32.4
	900/1500	265	215	165.1	45.1
	2500	273	235	171.5	57.9

• All dimensions in millimeters unless specified as “inch”. Dimension are for reference only, subject to change.

DB2 Series(Flange x Flange)

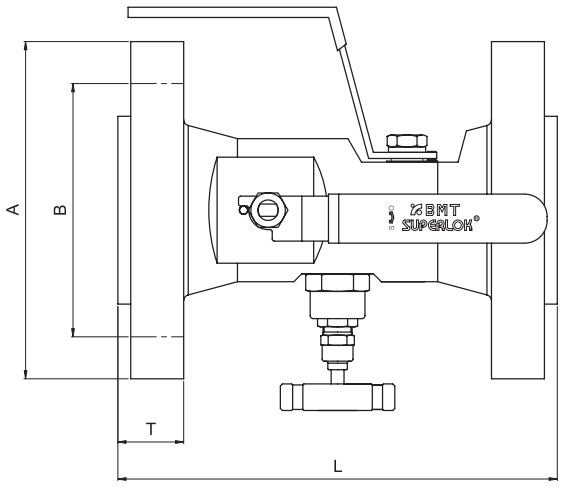

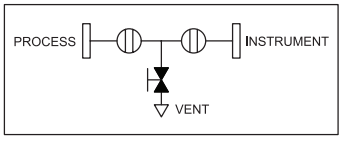

Dimensions

(10mm BORE)

Size (inch)	Rating (lb)	Dimension			
		L (RF)	A	B	T(RF)
1/2 (DN15)	150	190	90	60.3	11.6
	300	190	95	66.7	14.7
	600	205	95		21.3
	900/1500	230	120	82.5	29.3
	2500	240	135	88.9	37.2
3/4 DN(20)	150	190	100	69.8	13.2
	300	190	115	82.5	16.3
	600	200	115		22.9
	900/1500	230	130	88.9	32.4
	2500	240	140	95.2	38.8
1 (DN25)	150	190	110	79.4	14.7
	300	190	125	88.9	17.9
	600	200	125		24.5
	900/1500	240	150	101.6	35.6
	2500	260	160	108.0	42.0
1-1/2 (DN40)	150	190	125	98.4	17.9
	300	200	155	114.3	21.1
	600	210	155		29.3
	900/1500	245	180	124.0	38.8
	2500	290	205	146.1	51.5
2 (DN50)	150	200	150	120.6	19.5
	300	210	165	127.0	22.7
	600	240			32.4
	900/1500	290	215	165.1	45.1
	2500	315	235	171.5	57.9

• All dimensions in millimeters unless specified as “inch”. Dimension are for reference only, subject to change.

Dimensions

(14mm BORE)

Size (inch)	Rating (lb)	Dimension			
		L (RF)	A	B	T(RF)
3/4 DN(20)	150	235	100	69.8	13.2
	300		115	82.5	16.3
	600		115		22.9
	900/1500	254	130	88.9	32.4
	2500	267	140	95.2	38.8
1 (DN25)	150	235	110	79.4	14.7
	300		125	88.9	17.9
	600	254	125		24.5
	900/1500	267	150	101.6	35.6
	2500	273	160	108.0	42.0
1-1/2 (DN40)	150	235	125	98.4	17.9
	300	254	155	114.3	21.1
	600		155		29.3
	900/1500	267	180	124.0	38.8
	2500	334	205	146.1	51.5
2 (DN50)	150	254	150	120.6	19.5
	300		165	127.0	22.7
	600	267			32.4
	900/1500	334	215	165.1	45.1
	2500		235	171.5	57.9

(20mm BORE)

Size (inch)	Rating (lb)	Dimension			
		L (RF)	A	B	T(RF)
1 (DN25)	150	235	110	79.4	14.7
	300		125	88.9	17.9
	600	254	125		24.5
	900/1500	267	150	101.6	35.6
	2500	273	160	108.0	42.0
1-1/2 (DN40)	150	235	125	98.4	17.9
	300	254	155	114.3	21.1
	600		155		29.3
	900/1500	268	180	124.0	38.8
	2500	334	205	146.1	51.5
2 (DN50)	150	254	150	120.6	19.5
	300		165	127.0	22.7
	600	173			32.4
	900/1500	334	215	165.1	45.1
	2500		235	171.5	57.9

• All dimensions in millimeters unless specified as “inch”. Dimension are for reference only, subject to change.

Dimensions

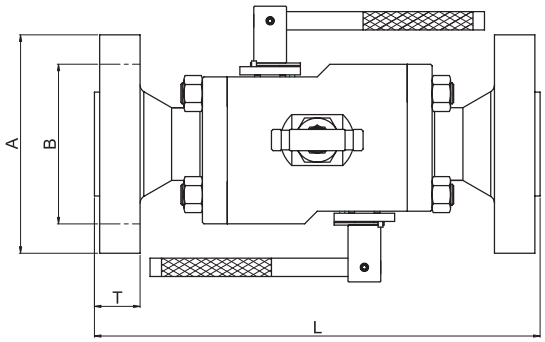

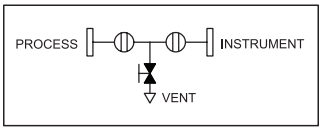

(REDUCER BORE)

Size (inch)	Bore	Rating (lb)	Dimension					
			RF Flange		RTJ Flange		A	B
			L	T	L	T		
1-1/2 (DN40)	25.4	150	270	17.9	280	22.7	125	98.4
		300	290	21.1	300	25.9	155	114.3
		600	330	29.3	330	30.3	155	
		900/1500	350	38.8	350	39.8	180	124.0
		2500	400	51.5	400	52.5	205	146.1
2 (DN50)	38.1	150	380	19.5	390	24.3	150	120.6
		300	390	22.7	400	27.5	165	127.0
		600	410	32.4	410	33.4		
		900/1500	450	45.1	450	46.1	215	165.1
		2500	490	57.9	490	58.9	235	171.5
3 (DN80)	50.8	150	530	24.3	540	29.1	190	152.4
		300	540	29.0	550	33.8	210	168.1
		600	560	38.8	560	39.9		

(FULL BORE)

Size (inch)	Bore	Rating (lb)	Dimension					
			RF Flange		RTJ Flange		A	B
			L	T	L	T		
1 (DN25)	25.4	150	270	14.7	280	19.5	110	79.4
		300	280	17.9	290	22.7	125	88.9
		600	300	24.5	300	25.5	125	
		900/1500	350	35.6	350	36.6	150	101.6
		2500	370	42.0	370	43.0	160	108.0
1-1/2 (DN40)	38.1	150	370	17.9	380	22.7	125	98.4
		300	400	21.1	410	25.9	155	114.3
		600	410	29.3	410	30.3	155	
		900/1500	430	38.8	430	39.8	180	124.0
		2500	470	51.5	470	52.5	205	146.1
2 (DN50)	50.8	150	460	19.5	470	24.3	150	120.6
		300	470	22.7	480	27.5	165	127.0
		600	490	32.4	490	33.4		
		900/1500	510	45.1	510	46.1	215	165.1

• All dimensions in millimeters unless specified as “inch”. Dimension are for reference only, subject to change.

Sampling Valve

This manifold range is designed to replace conventional multiple-valve installations where sampling of the process stream is required. This design has been developed to remove a sample directly from the process stream at full system pressure.

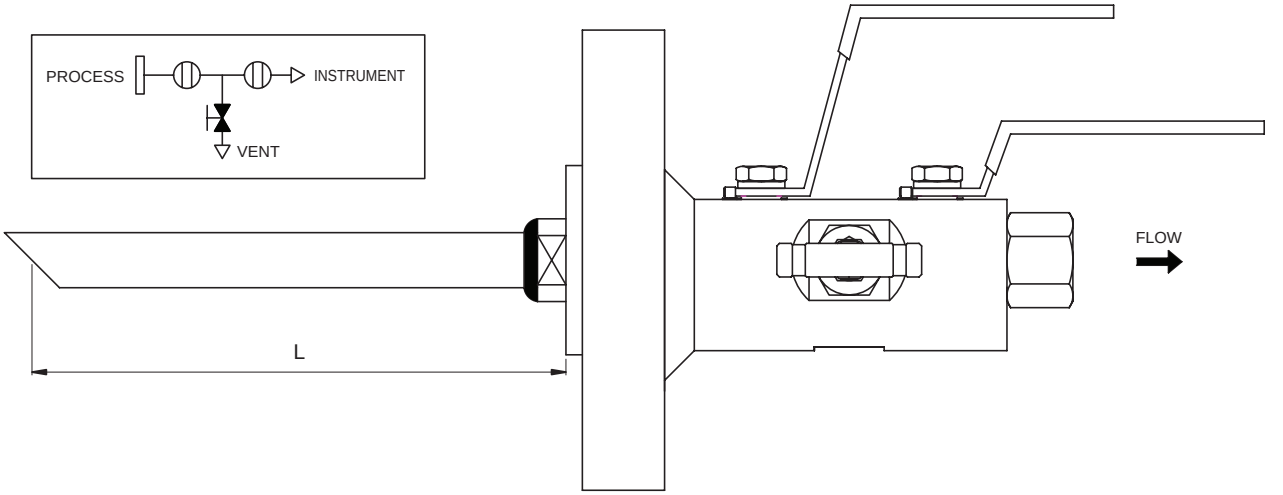

Sampling probe

The probe length must be specified from the raised face to the end of the probe in mm , to the nearest mm.
Probes are supplied to suit the insertion length required by the pipeline and thus must be specified by the customer

Chemical Injection Valve

This manifold range is designed to replace conventional multiple-valve installations where injection into the process stream is required. This design has been developed to inject directly into the process stream at full system pressure.

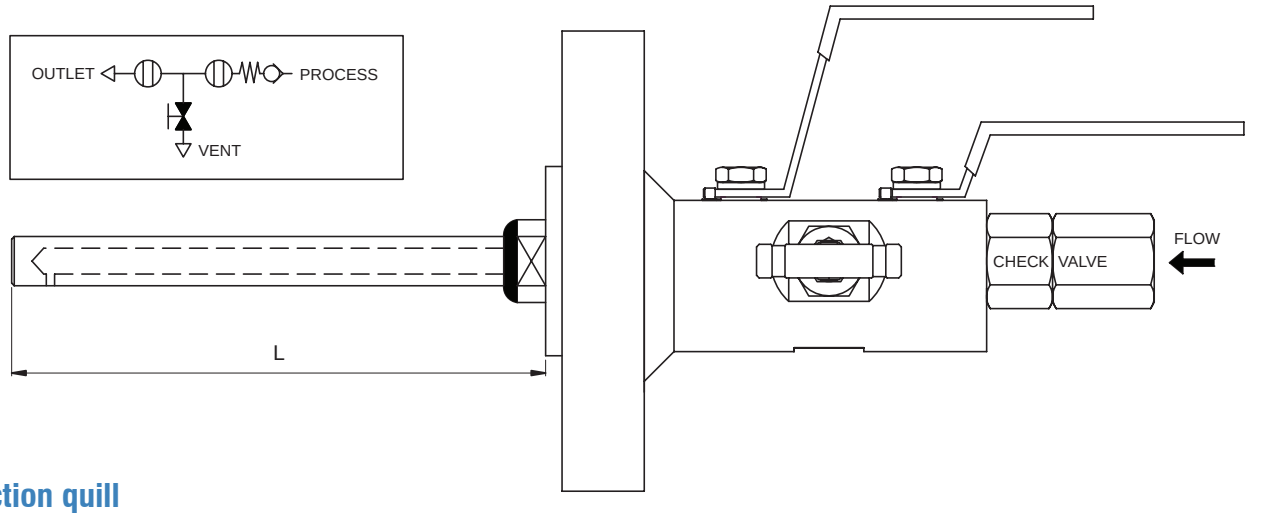

Injection quill

The probe length must be specified from the raised face to the end of the probe in mm .
Probes length shall be decided in consideration of injection insert length in the pipeline and customer's request.

Non return check valve

This poppet type spring return valve has a viton soft seal(SUPERLOK standard)

Fugitive Emission

ISO 15848 parts 1&2 (defining a classification system and qualification procedures, and production acceptance test of industrial valves, respectively) specify new ultra low standards for emissions. This standard is becoming the requirement for oil and gas and petrochemical organizations worldwide.
The standard was originally created for process valves and control valves but is now being applied to Instrument valves which include primary isolation valves, especially on environmentally sensitive projects.
Meeting these low levels is a challenge, which BMT Instrument has solved with the new ball and needle valve designs used in these DBB valves and mono flanges.
These designs meet the highest class 'A' level over the temperature range -29°C to +180°C, alongside the standard instrumentation manifold pressure ranges.
Production testing and certification is available upon request. Please specify sample quantity required for production testing with your order.

Valve Specification

- Tightness class A >1 x 10-6 mg.s-1.m-1.
- Maximum cold working pressure rating 6,000 psig.
- Temperature rating -50°C to 180°C (-58°F to 356°F)
- ISO15848-1 prototype tested using global helium vacuum method.

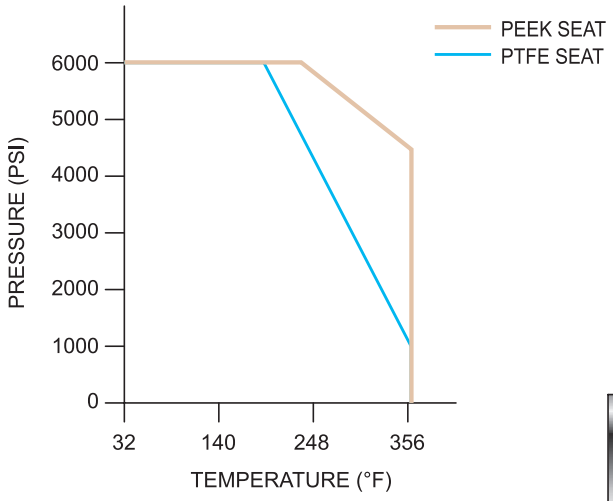

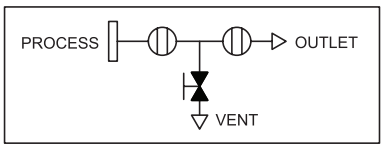

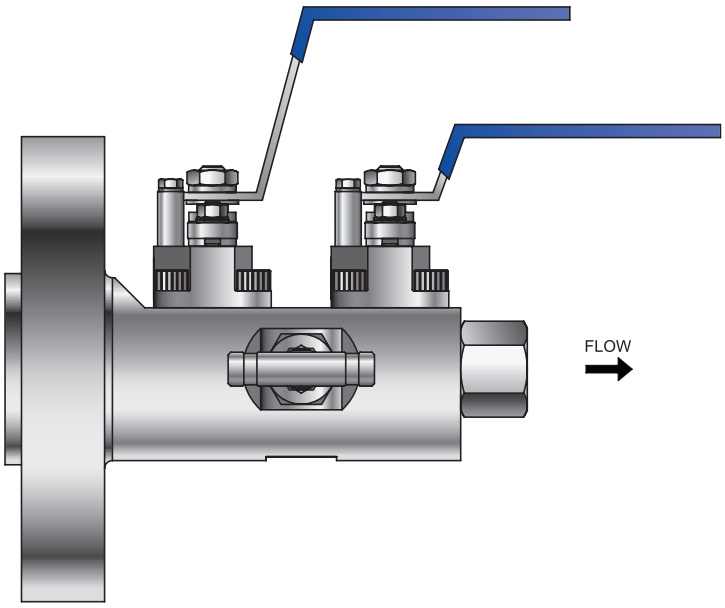

The ISO 15848 standard effectively sets a requirement for zero emissions for processes involving volatile air pollutants and hazardous fluids.This design has been developed to minimise fugitive emissions.

Ordering Information

Example 1 : DB211 - R8C - B111 - LF2

1 2 3 4 5 6 7 8

Example 2 : SB111 - R8A8 - D111 - AB

1 2 3 4 5 6 5 7 8

1. Valves

SB - SINGLE BLOCK & BLEED VALVE
DB - DOUBLE BLOCK & BLEED VALVE

2. Valve Type

1 - FLANGE X FNPT
2 - FLANGE X FLANGE
3 - MNPT X FNPT
4 - FNPT X FNPT
5 - MSW X FNPT
6 - SW X FNPT
7 - BW X FNPT
8 - MSW X FLANGE
9 - MNPT X FLANGE
0 - SW X SW
B - BW X BW

3. Valve Series

IDENTIFY		1st ISOLATE	2st ISOLATE	VENT
SINGLE BLOCK TYPE	1	BALL	-	NEEDLE
	2			OS & Y
	3			BALL
	4	NEEDLE		NEEDLE
	5	OS & Y		
	6			OS & Y
DOUBLE BLOCK TYPE	1	BALL	BALL	NEEDLE
	2			OS & Y
	3			BALL
	4	NEEDLE	NEEDLE	NEEDLE
	5	OS & Y	OS & Y	NEEDLE
	6			OS & Y
	7	TR BALL	TR BALL	NEEDLE
	8			OS & Y
*A		FUGITIVE EMISSION CL-A		
*B		FUGITIVE EMISSION CL-B		

* To select the Fugitive Emission type, please add suffix of "A" or "B" to the part number of Valve Series.

4. Bore Size (mm)

(BLANK) - 10mm(STANDARD)
1 - 14mm
2 - 20mm
3 - 25mm
4 - 32mm
5 - 38mm
6 - 50mm

5. Connection Size

R - RAISED FACE (BLANK)
J - RING TYPE JOINT
F - FLAT FACE FLANGE
AF - API-6B TYPE
SA - SAE J518 FLANGE
IS - ISO 6164 FLANGE
JF - JIS FLANGE

+

4 - 1/4 ”
6 - 3/8 ”
8 - 1/2”
12 - 3/4”
16 - 1”
24 - 1-1/2”
32 - 2”
48 - 3”

6. Pressure Class

A - 150
B - 300
C - 600
D - 900
E - 1500
F - 2500
S - 800
G - 2000psi
H - 3000psi
I - 5000psi
J - 10000psi

8. Body Material

(BLANK) - SS316
15 - A105
LF2 - A350 LF2
F51 - A182 F51
M40 - MONEL 400
AB - AL BRONZE
625 - INCONEL 625

7. Option + Trim + Seat + O-Ring

Option		Trim		Seat		O-Ring	
Type	Identify	Type	Identify	Type	Identify	Type	Identify
STANDARD(FIRE SAFETY)	BLANK(A)	Body = Trim	BLANK(0)	PTFE	BLANK(0)	NBR	BLANK(0)
SAMPLING PROBE	B	SS316	1	R.PTFE+GLASS	1	VITON	1
CHEMICAL INJECTION	C	CF8M	2	R.PTFE+CARBON	2	EPDM	2
LOCKING DEVICE	D	SS316L	3	PEEK	3	KALREZ	3
ANTI TAMPER KEY	E	SS304	4	PCTFE	4	CR	4
METAL SEAT	H	A105 + ENP	5	POM	5	SILICON	5
CRYOGENIC SERVICE	CY	A105 + CR	6	DEVLON-V	6	NBR (AED)	6
GEAR	G	MONEL 400	7	DELIN	7	VITON (AED)	7
ACTUATOR	-	316 + HF	8	METAL	8	HNBR	8
WELD OVERLAY	M	DUPLEX	9	NYLON 6	9	Kalrez (AED)	9
		INCONEL625	I				

Monoflange Valves

Features

- ANSI B16.5 flanged inlet connections 1/2" to 2" sizes Class 150 rated to class 2500 rated.
- 1/2"-14 NPT(female) standard outlet.
- 1/4"-18 NPT(female) standard vent.
- Standard materials of Stainless steel
  ASTM A182 F316/F316L, Carbon steel ASTM
  A350 LF2/A105, Duplex ASTM A182 F51.
- Optional materials include Super Duplex, Monel, Hastelloy, Inconel.
- Combined needle and OS & Y valves available.
- Raised face and ring type joint flange styles.
- One-piece forged construction flange as standard.
- Fire safe designed to meet BS 6755 Part 2 / API 607.(As option)
- Pressure boundary designs calculated to ASME VIII Div 1 and verified by testing.
- Heat code traceable material to EN 10204.3.1.
- Bubble tight shut off valve seats 17-4 PH tips standard.
- Colour coded functional valves.
- Locking and anti tamper devices for all valve types available. (as option)
- Permanent marked body with full order and specification details.

MF1V1 Series

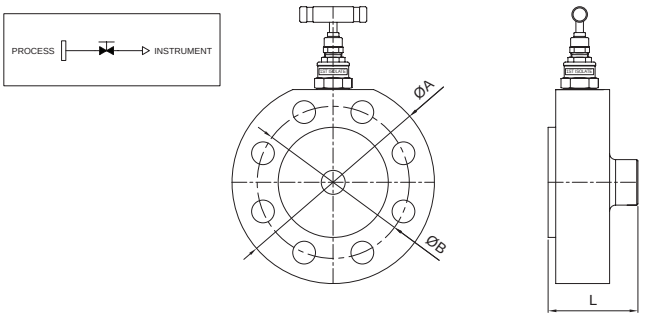

MF1V2 Series

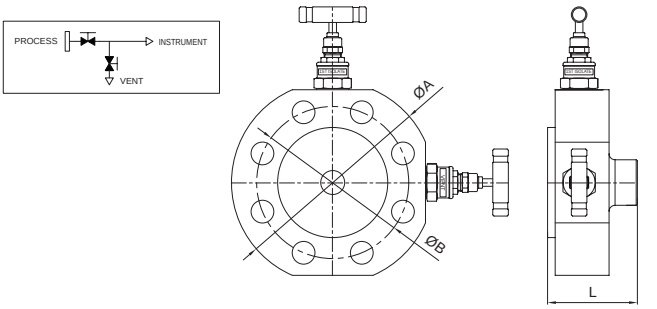

MF1V3 Series

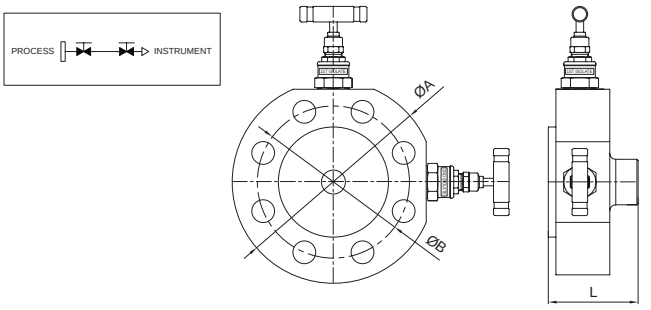

MF1V4 Series

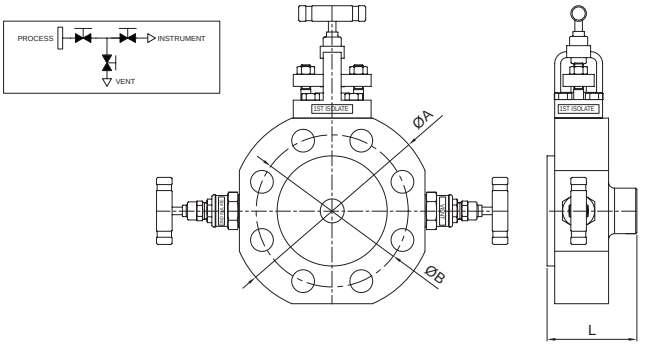

Dimensions

Size (inch)	Rating (lb)	Dinension			
		L(RF)	L(RTJ)	A	B
1/2 (DN15)	150	64	-	90	60.3
	300		64	95	66.7
	600	68		95	
	900/1500			120	82.5
	2500			135	88.9
3/4 DN(20)	150	64	-	100	69.8
	300		68	115	82.5
	600	68		115	
	900/1500			130	88.9
	2500	73	73	140	95.2
1 (DN25)	150	64	68	110	79.4
	300			125	88.9
	600	68		125	
	900/1500	73	73	150	101.6
	2500			160	108.0
1-1/2 (DN40)	150	64	68	125	98.4
	300	69	69	155	114.3
	600	73	73	155	
	900/1500			180	123.8
	2500	82	84	205	146.1
2 (DN50)	150	69	73	150	120.6
	300		75	165	127.0
	600	73			
	900/1500	82	84	215	165.1

• All dimensions in millimeters unless specified as “inch”. Dimension are for reference only, subject to change.

Ordering Information

Example 1 :

MF	1V41	-	J8C8	-	E	-	AB
1	2		3 4 3		5		6

Example 2 :

MF	1V11	-	R8C8	-	LF2
1	2		3 4 3		6

1. Valves

MF - MONO FLANGE

2. Valve Type

IDENTIFY			1st ISOLATE	2st ISOLATE	VENT
1 - FLANGE X FNPT 2 - FLANGE X FLANGE	V1	1	NEEDLE	-	-
		2	OS & Y		
	V2	1	NEEDLE	-	NEEDLE
		2	OS & Y		
		3			OS & Y
	V3	1	NEEDLE	NEEDLE	-
		2	OS & Y		
		3		OS & Y	
	V4	1	NEEDLE	NEEDLE	NEEDLE
		2	OS & Y	NEEDLE	
		3		OS & Y	
		4		OS & Y	OS & Y

3. Connection Size

R - RAISED FACE (BLANK)
J - RING TYPE JOINT FLANGE
F - FLAT FACE
AF - API-6B TYPE
SA - SAE J518 FLANGE
IS - ISO 6164 FLANGE
JF - JIS FLANGE

+

8 - 1/2”
12 - 3/4”
16 - 1”
24 - 1-1/2”
32 - 2”
48 - 3”

4. Pressure Class

A - 150
B - 300
C - 600
D - 900
E - 1500
F - 2500

5. Option

A - STANDARD (FIRE SAFETY)
D - LOCKING DEVICE
E - ANTI TAMPER KEY
F - BOLTED BONNET

6. Body Material

(BLANK) - SS316
15 - A105
LF2 - A350 LF2
F51 - A182 F51
M40 - MONEL 400
AB - AL BRONZE
625 - INCONEL 625

Integral Block & Bleed Valves

SUPERLOK®

Cryogenic Service Valves

Ball Valves & Globe Valves

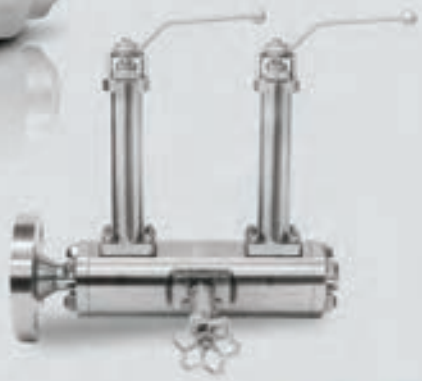

www.superlok.com

Cryogenic Service Applications

Valves are used with cryogens from production through transportation and storage which serve many industries with gases such as oxygen, nitrogen, argon and more.
At extremely low temperatures of cryogenic liquids, many common materials become brittle and can crack.
Many materials also shrink, causing potentially leaks at connections.
Therefore, care must be taken when designing equipment and selecting materials to be used with cryogens.
Moisture must not be allowed to contaminate the valve as it will freeze and expand and cause leakage and abrasive damage to the equipment.
Some of the common gases used are listed below.

Liquefied Gases	Boiling Point		Liquefied Gases	Boiling Point	
	0℃	0℉		0℃	0℉
Ammonia (NH3)	-64.4	-84	Oxygen (O2)	-183.3	-298
Propane (C3H8)	-76.6	-106	Argon (Ar)	-186.1	-303
Carbon Dioxide (CO2)	-78.5	-109	Air	-194.4	-318
Acetylene (C2H2)	-83.9	-119	Nitrogen (N2)	-195.6	-320
Ethylene (C2H4)	-103.9	-155	Neon (Ne)	-246.1	-411
Methane (CH4)	-161.7	-259	Hydrogen (H2)	-252.8	-423
Natural Gas (LNG)	-167.8	-270	Helium (He)	-268.9	-452

Cryogenic Service Applications

Common Steel will show low temperature brittleness under low temperature.
Therefore, it is a key for design and manufacturing to select suitable body materials according to the lowest working temperature of the cryogenic valve. Refer to the following table for the lowest working temperature of body materials.
The low temperature materials shall be subjected to low temperature impact test according to standard requirements.
For valves with working temperature lower than -100℃, the body, bonnet and stem must be subjected to cryogenic treatment after tough machining.
The ball and seat sealing face should be subjected to cryogenic treatment hard alloy spray welding/overlay welding.
Then grinding and assembly can be carried out, so as to ensure the adaptability of materials under low temperature.
In addition, the pacing, gasket, bolt and nut shall be made of materials suitable for low temperature service condition.

Forging		Casting	
Material	Minimum Temperature	Material	Minimum Temperature
ASTM A350 LF2	-46℃	ASTM A352 LCB ASTM A352 LCC	-46℃ -46℃
ASTM A350 LF5	-59℃	ASTM A352 LC1	-59℃
ASTM A350 LF9	-73℃	ASTM A352 LC2	-73℃
ASTM A350 LF3	-101℃	ASTM A352 LC3	-101℃
ASTM A182 F304	-254℃	ASTM A351 CF8	-254℃
ASTM A182 F316	-254℃	ASTM A351 CF8M	-254℃
ASTM A182 F304L	-254℃	ASTM A351 CF3	-254℃
ASTM A182 F316L	-254℃	ASTM A351 CF3M	-254℃

Construction - Ball & DBB Valves

Extended bonnets

Gland packing is located away from cold area in cryogenic and low temperature systems. Access to valve operator is easier in lagged high temperature applications. Extended stems allow operation through bulk heads and other obstacles.

Cavity pressure relief

Used for liquid gas service and other applications where body cavity pressure may increase.
[3 possibilities or combinations are available]

- a small hole in the throat of the upstream port, allows the cavity to vent to the upstream side, making the valve unidirectional.
- the hole is fitted with a relief valve for bidirectional operation.
- self relieving seats : the seat design itself was studied to relieve the excess of pressure inside the cavity of the valve.

Locking devices

On manual valves, bolted plates allow all ball valves to be padlocked in the fully open or closed position. On valves with gearboxs, the locking devices are part of the gear. Interlocking systems ensure correct sequencing of any number and combination valves.

Manual or Motor Operated (Pneumatic, Electric or Hydraulic)
Uni- / Bi-Direction
Double Block & Bleed Design

Seat / Sealing materials

From soft materials suitable for temperature down to –196°C (-327°F) to metal seats for aggressive and corrosive process media up to 500°C (932°F) constant temperature.

Construction - Globe & Gate Valves

Seat / Sealing materials

From Soft Materials suitable for temperature down to -196°C (-327°F) to metal seats for aggressive and corrosive media up to 850°C (1562°F) constant temperature.

Extended bonnets

Gland packing is located away from cold area in cryogenic and low temperature systems. Access to valve operator is easier in lagged high temperature applications. Extended stems allow operation through bulkheads and other obstacles.

Cavity pressure Relief

Not needed

Locking devices

A locking device allows all Globe Valves to be padlocked in the fully open or closed position.

Actuated operation

Electric, pneumatic or hydraulic actuators. Actuated valve packages are functionally tested.

Cryogenic Valve Testing

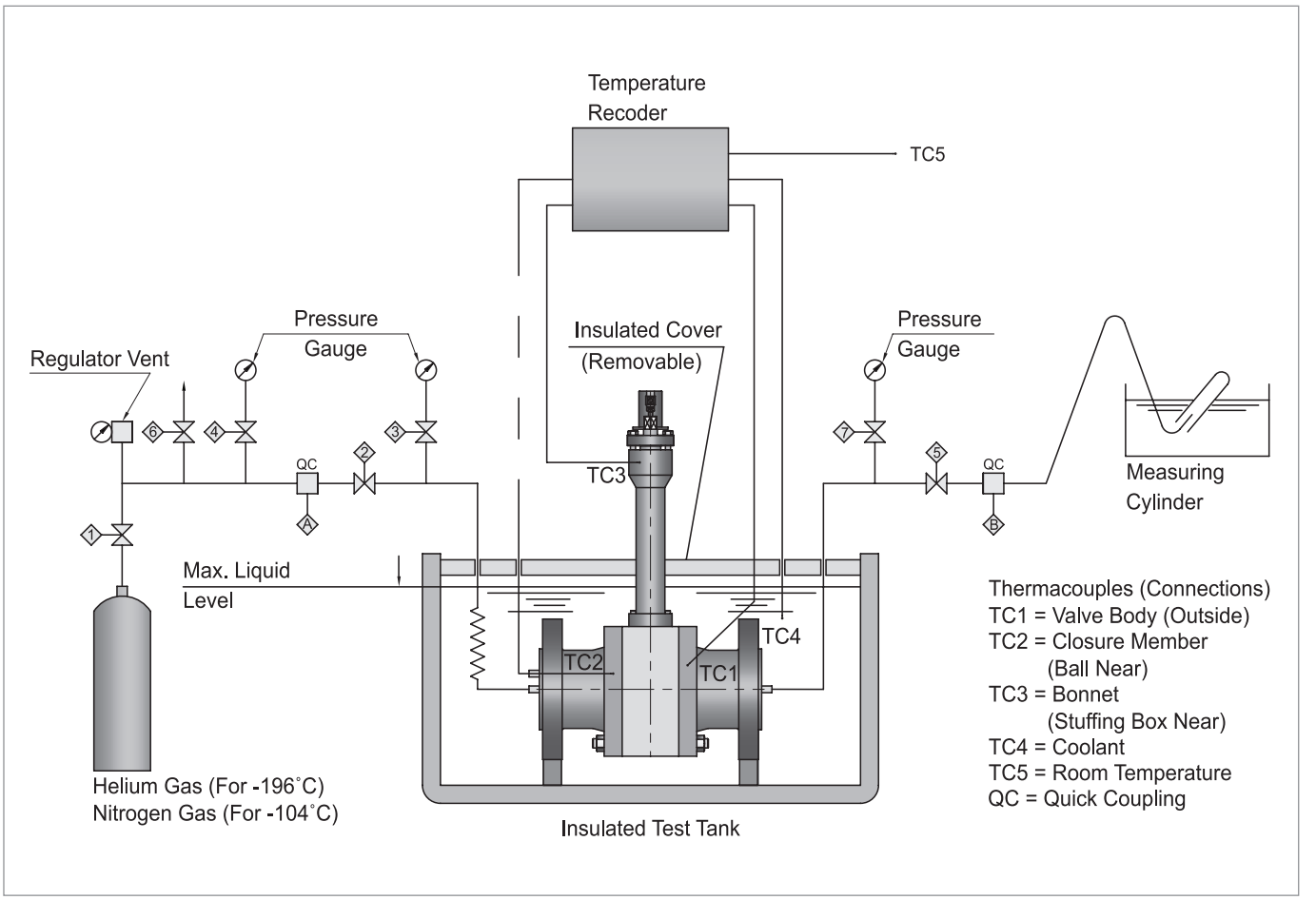

In order to maintain valve reliability BMT has an inhouse testing facility for cryogenic valves to ensure the quality of the valves and their functionality.

These tests include valve leakage, torques and cycling under typical cryogenic conditions.

The tests are carried out in a cryogenic bath or in-line under pressure according to standard requirments of international procedures such as BS6364.

Ball Valve Series

Designed for long life and easy servicing

Specifications

- Valve size : top entry - 1/2~6inch
  three piece - 1/2~2inch
- Pressure class : ASME class 150 to class1500
- End connection : butt weld, socket weld, threaded,
  flanged or combinations
- Temperature : down to - 196°C
- Bolted extension bonnet
- Anti blow out proof stem
- Fire safety design
- Wall thickness design : ASME B16.34
- Inspection and test : BS6364 , API 598
- End flange dimension : ASME B16.5
- Butt weld end dimension : ASME B16.25
- Socket weld end dimension : ASME B 16.11
- Face to face & end to end : ASME B16.10

Double Block & Bleed Valves

Designed for long life and easy servicing

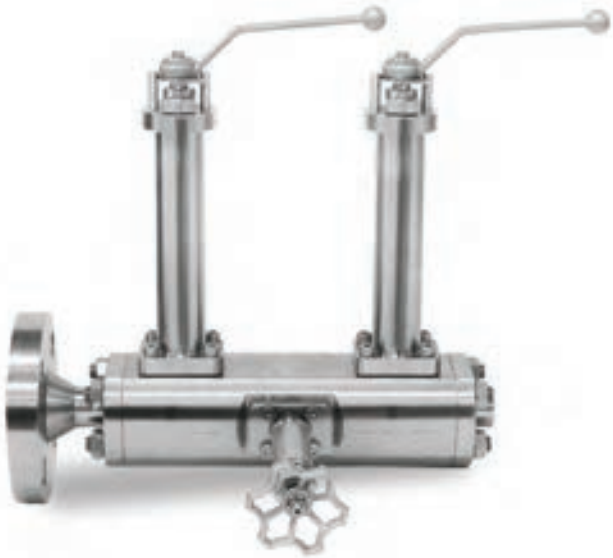

Specifications

- Valve size : 1/2 ~ 3 inch
- Pressure class : ASME Class 150 to Class 1500
- Valve type : Ball-Ball-Needle, Needle-Needle-Needle
- Bore size : Full bore, Reduced Bore, 10mm, 14mm
- End connection : Flanged-Threaded, Flanged-Flanged
- Temperature : down to -196°C
- Floating & Trunnion ball design
- Bolted extension bonnet
- Anti blow out proof stem
- Fire safety design
- Wall thickness design : ASME B16.34
- Inspection and test : BS 6364, API 598
- End flange dimension : ASME B 16.5
- Face to face & end to end : Manufacture standard

Top Entry Ball Valves

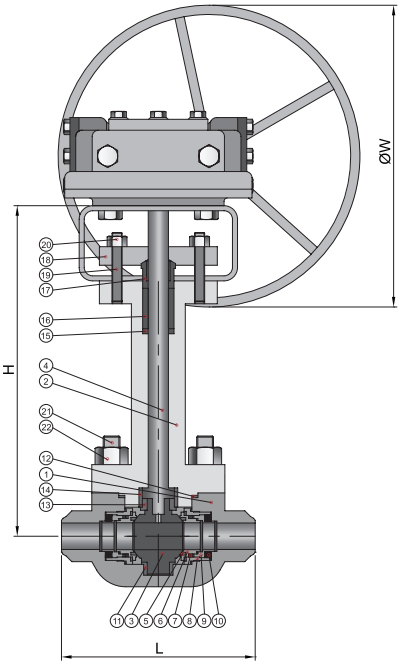

Material of Construction

NO.	PART LIST	MATERIAL
1	BODY	ASTM A351-CF8M
2	BONNET	ASTM A351-CF8M
3	BALL	ASTM A351-CF8M
4	STEM	ASTM A276-316
5	SEAT	PCTFE
6	SEAT RETAINER	ASTM A276-316
7	U-CUP SEAL	VIRGIN PTFE+SS316
8	SEAT HOLDER	ASTM A276-316
9	BACK UP SEAT RING	ASTM A276-316
10	SPRING	INCONEL X-750
11	BOTTOM THRUST WASHER	PCTFE
12	GASKET	GRAPHITE+SS316
13	UPPER THRUST WASHER	PCTFE
14	TURUST BEARING	PCTFE
15	STEM WASHER	ASTM A276-316
16	PACKING	GRAPHITE
17	GLAND	ASTM A276-316
18	GLAND FLANGE	ASTM A276-316
19	FLANGE BOLT	ASTM A320-B8
20	FLANGE BOLT NUT	ASTM A194-8
21	BONNET BOLT	ASTM A320-B8
22	BONNET BOLT NUT	ASTM A194-8

Table of Dimensions

Class 150

Size		Dimensions				Weight, kg	
DN	NPS	L		H	W		
		BW	FLG			BW	FLG
15	1/2	108	108	300	190	4.3	5.2
20	3/4	117	117	300	190	5.7	7.1
25	1	127	127	352	230	8.6	10.4
40	1-1/2	165	165	400	300	12.9	16
50	2	178	178	434	350	15	20
65	2-1/2	190	190	550	350	20	23
80	3	203	203	561	350	36	45
100	4	229	229	600	350	61	73
150	6	394	394	1073	350	213	249

Class 300

Size		Dimensions				Weight, kg	
DN	NPS	L		H	W		
		BW	FLG			BW	FLG
15	1/2	140	140	300	190	4.3	5.5
20	3/4	152	152	300	190	5.7	8.2
25	1	165	165	352	230	8.6	11.6
40	1-1/2	190	190	400	450	12.9	15.9
50	2	216	216	434	450	16	22
65	2-1/2	241	241	550	450	25	31
80	3	283	283	560	450	43	54
100	4	305	305	612	450	80	100
150	6	403	403	1073	450	227	272

Class 600

Size		Dimensions				Weight, kg	
DN	NPS	L		H	W		
		BW	FLG			BW	FLG
15	1/2	165	165	300	230	6	7.8
20	3/4	191	191	300	230	6	9
25	1	216	216	352	450	12	15.7
40	1-1/2	241	241	400	450	25	32.1
50	2	292	292	434	450	43	54
65	2-1/2	330	330	550	450	55	62
80	3	356	356	600	450	66	82
100	4	432	432	710	450	102	145
150	6	559	559	1163	450	254	318

• All dimensions in millimeters unless specified as “inch”. Dimension are for reference only, subject to change.

3-Piece Ball Valves

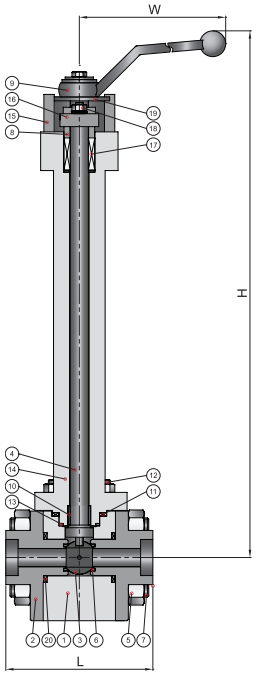

Material of Construction

NO.	DESCRIPTION	MATERIAL
1	BODY	ASTM A182-F316
2	BODY CAP	ASTM A182-F316
3	BALL	ASTM A276-316
4	STEM	ASTM A276-316
5	BODY BOLT NUT	ASTM A194-8
6	BALL SEAT	PCTFE
7	BODY BOLT	ASTM A320-B8
8	PACKING GLAND	ASTM A276-316
9	BAR HANDLE	A351 CF8M
10	BUSHING	PCTFE
11	GASKET	GRAPHITE
12	BONNET BOLT / NUT	ASTM A320-B8/A194-8
13	BONNET SEAL	PCTFE
14	BONNET	ASTM A182-F316
15	STOP PIN	SS 316
16	BONNET FLANGE	ASTM A276-316
17	PACKING	GRAPHITE
18	STUD BOLT / NUT	ASTM A320-B8/A194-8
19	LOCKING DEVICE	SS 316
20	GASKET	GRAPHITE
21	NAME PLATE	STAINLESS STEEL

Table of Dimensions

Class 150, 300

Size		Dimensions			Weight kg
DN	NPS	L SW	H	W	
15	1/2	107	313	190	3.7
20	3/4	107	313	190	3.7
25	1	125	326	230	5.2
32	1-1/4	150	349	260	10.3
40	1-1/2	150	349	260	10.3
50	2	180	370	260	17.1

Class 600

Size		Dimensions			Weight kg
DN	NPS	L SW	H	W	
15	1/2	107	313	190	3.7
20	3/4	107	313	190	3.7
25	1	125	326	230	5.2
32	1-1/4	150	349	260	10.3
40	1-1/2	150	349	260	10.3
50	2	180	370	260	17.1

Class 800

Size		Dimensions			Weight kg
DN	NPS	L SW	H	W	
15	1/2	107	313	190	3.7
20	3/4	107	313	190	3.7
25	1	125	326	230	5.2
32	1-1/4	150	349	260	10.3
40	1-1/2	150	349	260	10.3
50	2	180	370	260	17.1

Class 900

Size		Dimensions			Weight kg
DN	NPS	L SW	H	W	
15	1/2	167	326	230	7.3
20	3/4	167	326	230	7.3
25	1	185	342	230	10.6
32	1-1/4	210	360	260	19.1
40	1-1/2	210	360	260	19.1

Class 1500

Size		Dimensions			Weight kg
DN	NPS	L SW	H	W	
15	1/2	167	326	230	7.3
20	3/4	167	326	230	7.3
25	1	185	342	230	10.6
32	1-1/4	210	360	260	19.1
40	1-1/2	210	360	260	19.1

• All dimensions in millimeters unless specified as “inch”. Dimension are for reference only, subject to change.

Globe Valve Series

Designed for long life and easy servicing

Specifications

- Valve size : 1/2~6inch
- Pressure class : ASME class 150 to class 600
- End connection : butt weld, socket weld, threaded, flanged or combinations
- Temperature : -196°C to 850°C (-327°F to 1562°F)
- Standard inclusion of a back seat facility for ease of maintenance.
- Bolted extension bonnet
- Inside or outside screw stem & fire safety design
- Non rotating and self aligning stem disc construction
- Metal seat to bubble tight shut-off design
- Wall thickness design : ASME B16.34
- Inspection and test : BS6364 , API 598
- End flange dimension : ASME B16.5
- Butt weld end dimension : ASME B16.25
- Face to face & end to end : ASME B16.10

Gate Valve Series

Designed for long life and easy servicing

Specifications

- Valve size : 1/2~ 6 inch
- Pressure class : ASME class 150 to class 600
- End connection : socket weld, threaded
- Temperature : -196°C to 850°C (-327°F to 1562°F)
- Standard inclusion of a back seat facility for ease of maintenance.
- Bolted extension bonnet
- Inside or outside screw stem
- Non rotating and self aligning stem disc construction
- Metal seat to bubble tight shut-off design
- Wall thickness design : ASME B16.34
- Inspection and test : BS6364 , API 598
- Socket weld end dimension : ASME B16.11
- Face to face & end to end : ASME B16.10

Globe Valves

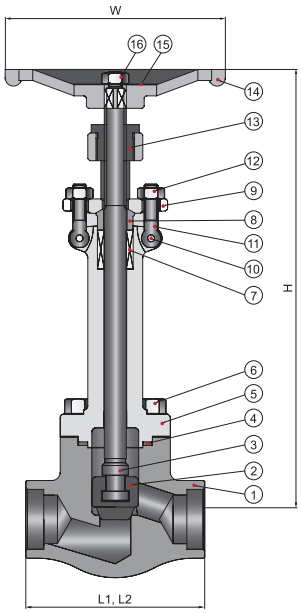

Material of Construction

NO.	DESCRIPTION	MATERIAL
1	BODY	ASTM A182-F316
2	DISC	ASTM A276-316
3	STEM	ASTM A276-316
4	GASKET	GRAPHITE
5	BONNET	ASTM A182-F316
6	BONNET BOLT	A320-B8
7	GLAND PACKING	GRAPHITE
8	GLAND	ASTM A276-316
9	GLAND FLANGE	ASTM A182-F316
10	EYE BOLT PIN	ASTM A276-304
11	EYE BOLT	A320-B8
12	EYE BOLT NUT	A194-8
13	SLEEVE	ASTM A276-316
14	HAND WHEEL	A351 CF8M
15	NAME PLATE	ALUMINIUM
16	WHEEL NUT	316 SS

Construction

Seat / Sealing materials :

From soft materials suitable for temperature down to –196°C (-327°F) to metal seats for aggressive and corrosive process media up to 850°C(1562°F) constant temperature.

Extended bonnets :

- Gland packing is located away from cold area in cryogenic and low temperature systems.
- Access to valve operator is easier in lagged high temperature applications
- Extended stems allow operation through bulkheads and other obstacles

Cavity pressure Relief :

Not needed

Locking devices :

A locking device allows all Globe valves to be padlocked in the fully open or closed position.

Actuated operation :

- Electric , pneumatic or hydraulic actuators.
- Actuated valve packages are functionally tested.

Table of Dimensions

Forged Steel Globe Valves - Class 150

Size		Dimensions				Weight, kg	
DN	NPS	L		H	W		
		SW	FLG			SW	FLG
15	1/2	79	108	466	100	4.3	8.7
20	3/4	92	117	466	100	5.7	9.1
25	1	111	127	503	125	8.6	12.3
32	1-1/4	152	165	606	160	12.9	16.2
40	1-1/2	152	165	606	160	12.6	-
50	2	172	203	657	180	21.3	24.4

Cast Steel Globe Valves - Class 150

Size		Dimensions				Weight, kg	
DN	NPS	L		H	W		
		BW/FLG	RTJ			BW	FLG/RTJ
65	2-1/2	216	229	750	200	27	32
80	3	241	254	760	224	37	42
100	4	292	305	810	250	50	55
125	5	356	368	920	250	50	55
150	6	406	419	973	315	81	86

Forged Steel Globe Valves - Class 300

Size		Dimensions				Weight, kg	
DN	NPS	L		H	W		
		SW	FLG			SW	FLG
15	1/2	79	152	466	100	4.3	8.8
20	3/4	92	178	466	100	5.7	9.4
25	1	111	203	503	125	8.6	12.7
32	1-1/4	152	216	606	160	12.9	17.0
40	1-1/2	152	229	606	160	12.6	17.1
50	2	172	267	657	180	21.3	25.5

Cast Steel Globe Valves - Class 300

Size		Dimensions				Weight, kg	
DN	NPS	L		H	W		
		BW/FLG	RTJ			BW	FLG/RTJ
65	2-1/2	292	308	750	200	35	40
80	3	318	333	760	224	65	70
100	4	356	371	810	250	80	85
125	5	400	416	920	280	100	105
150	6	445	460	973	315	200	205

Forged Steel Globe Valves - Class 600

Size		Dimensions				Weight, kg	
DN	NPS	L		H	W		
		SW	FLG			SW	FLG
15	1/2	79	165	466	100	4.3	9.4
20	3/4	92	191	466	100	5.7	10.1
25	1	111	216	503	125	8.6	14.0
32	1-1/4	152	229	606	160	12.9	18.1
40	1-1/2	152	241	606	160	12.6	18.4
50	2	172	292	657	180	21.3	26.6

Cast Steel Globe Valves - Class 600

Size		Dimensions				Weight, kg	
DN	NPS	L		H	W		
		BW/FLG	RTJ			BW	FLG/RTJ
65	2-1/2	330	333	800	224	50	55
80	3	356	359	840	250	72	75
100	4	432	435	1010	315	127	132
150	6	559	562	1160	400	295	310

• All dimensions in millimeters unless specified as “inch”. Dimension are for reference only, subject to change.

Gate Valves

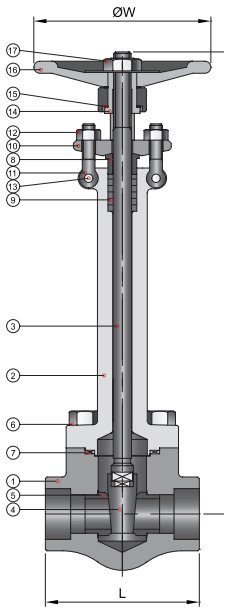

Material of Construction

NO.	DESCRIPTION	MATERIAL
1	BODY	ASTM A182-F316
2	BONNET	ASTM A182-F316
3	STEM	ASTM A276-316
4	WEDGE	ASTM A276-316
5	SEAT RING	ASTM A276-316
6	BONNET BOLT	ASTM A320-B8
7	GASKET	GRAPHITE
8	GLAND	ASTM A276-316
9	GLAND PACKING	GRAPHITE
10	GLAND FLANGE	ASTM A182-F316
11	GLAND BOLT	ASTM A320-B8
12	GLAND BOLT NUT	ASTM A194-8
13	GLAND BOLT PIN	ASTM A276-304
14	SLEEVE	ASTM A276-410
15	SLEEVE WASHER	ASTM A276-304
16	HAND HWEEL	ASTM A47
17	HAND WHEEL NUT	ASTM A194-8

Construction

Seat / Sealing materials :

From soft materials suitable for temperature down to –196°C(-327°F) to metal seats for aggressive and corrosive process media up to 850°C(1562°F) constant temperature.

Extended bonnets :

- Gland packing is located away from cold area in cryogenic and low temperature systems.
- Access to valve operator is easier in lagged high temperature applications
- Extended stems allow operation through bulkheads and other obstacles

Locking devices :

A locking device allows all Globe valves to be padlocked in the fully open or closed position.

Actuated operation :

- Electric , pneumatic or hydraulic actuators.
- Actuated valve packages are functionally tested.

Table of Dimensions

Forged Steel Gate Valves - Class 150

Size		Dimensions				Weight, kg	
DN	NPS	L		H	W	SW	FLG
		SW	FLG				
15	1/2	79	108	428	100	4.2	8.7
20	3/4	92	117	428	100	5.3	9.1
25	1	111	127	467	125	8.3	12.3
32	1-1/4	120	165	571	160	11.7	16.2
40	1-1/2	120	165	571	160	11.5	-
50	2	140	178	605	180	18.9	24.4

Cast Steel Gate Valves - Class 150

Size		Dimensions				Weight, kg	
DN	NPS	L		H	W	BW	FLG/RTJ
		BW	FLG/RTJ				
65	2-1/2	191	203	700	224	23	28
80	3	203	216	735	224	34	39
100	4	229	241	800	224	48	53
125	5	254	267	915	260	67	72
150	6	267	279	1073	300	85	90

Forged Steel Gate Valves - Class 300

Size		Dimensions				Weight, kg	
DN	NPS	L		H	W	SW	FLG
		SW	FLG				
15	1/2	79	108	428	100	4.2	8.9
20	3/4	92	117	428	100	5.3	9.5
25	1	111	127	467	125	8.3	12.8
32	1-1/4	120	165	571	160	11.7	17.1
40	1-1/2	120	165	571	160	11.5	17.2
50	2	140	178	605	180	18.9	25.4

Cast Steel Gate Valves - Class 300

Size		Dimensions				Weight, kg	
DN	NPS	L		H	W	BW	FLG/RTJ
		BW	FLG/RTJ				
65	2-1/2	241	257	720	224	42	49
80	3	282	298	750	224	45	52
100	4	305	321	812	224	82	92
125	5	381	397	960	260	205	215
150	6	403	419	1273	300	205	215

Forged Steel Gate Valves - Class 600

Size		Dimensions				Weight, kg	
DN	NPS	L		H	W	SW	FLG
		SW	FLG				
15	1/2	79	165	428	100	4.2	9.2
20	3/4	92	190	428	100	5.3	9.9
25	1	111	216	467	125	8.3	13.8
32	1-1/4	120	229	571	160	11.7	17.9
40	1-1/2	120	241	571	160	11.5	18.2
50	2	140	292	605	180	18.9	26.4

Cast Steel Gate Valves - Class 600

Size		Dimensions				Weight, kg	
DN	NPS	L		H	W	BW	FLG/RTJ
		BW	FLG/RTJ				
65	2-1/2	330	333	720	224	58	63
80	3	356	359	765	260	63	68
100	4	432	435	910	300	134	139
150	6	559	562	1363	400	310	315

• All dimensions in millimeters unless specified as “inch”. Dimension are for reference only, subject to change.

Ordering Information

Example 1 :

FCB3	C	RF	1	-	16	-	G	(-SS)
1	2	3	4		5		6	7

Example 2 :

FCGB	C	8S	RF	2	-	16	-	36L
1	2	3	3	4		5		7

Example 3 :

FCGT	A	SW	FN	2	-	8	-	36L
1	2	3	3	4		5		7

1. Cryogenic Valve

Valve	Ball Valve 1-Piece Top Entry	Ball 3-Piece Side Entry	Globe	Gate
Designation	FCB1	FCB3	FCGB	FCGT

2. Pressure Rating

Class	150	300	600	900	1500	2500
Designation	A	B	C	D	E	F

3. End Connection

Flange	Raised Face	Ring Joint	Flat Face
Designation	RF	RJ	FF

Butt Weld	Sch10S	Sch20S	Sch40S	Sch80S	Sch160	SchXXS
Designation	1S	2S	4S	8S	16	DS

Type	Socket Weld	Male NPT	Male PT	Female NPT	Female PT
Designation	SW	MN	MR	FN	FR

4. Bore

Bore	Full Bore	Reduced Bore	Double Reduced Bore
Designation	1	2	3

5. Size

Size	1/2"	3/4"	1"	1-1/4"	1-1/2"	2"	2-1/2"	3"	4"	5"	6"
Designation	8	12	16	20	24	32	40	48	64	80	96

6. Option

Option	Gear Actuator
Designation	G

7. Material

Material	A182-F316 / A351-CF8M	A182-F316L / A351-CF3M
Designation	Blank	36L

Cryogenic Service Valves

www.sks-online.com

SUPERLOK®

High Pressure Valves

www.superlok.com

Medium Pressure Valves

SHNV20 Series - 20,000 psi (1380 bar)

Features

- Pressures to 20,000 psi (1,380 bar)
- Non-rotating stem tips.
- Available sizes are 1/4", 3/8", 9/16", 3/4" and 1".
- Type 316 stainless steel high tensile bodies.
- Choice of VEE or Regulating stem tip.
- PTFE(Teflon) encapsulated packing provides dependable stem and body sealing.

Specifications

- Maximum Working Pressure rating: 20,000psig (1,380bar) @72 F°(22 C°)
- Temperature rating: 0 to 450 F°(-17.8 to 232 C°) with Teflon packing and up to 1200 F°(648 C°) with optional grafoil packing.

Technical Data

Valve Flow Coefficient

Tube O.D In.	Connection	Orifice In. (mm)	*Cv	Pressure / Temperature Rating psi (bar) @72 F°(22 C°)
1/4"	MP4	0.125" (3.18)	0.31	20,000 psi (1,380 bar)
3/8"	MP6	0.219" (5.56)	0.75	20,000 psi (1,380 bar)
9/16"	MP9	0.312" (7.92)	1.75	20,000 psi (1,380 bar)
3/4"	MP12	0.438" (11.13)	2.80	20,000 psi (1,380 bar)
1"	MP16	0.562" (14.27)	5.20	20,000 psi (1,380 bar)

*Cv values listed are for 2-way straight pattern valves.
For 2-way angle pattern valves, increase Cv value by 50%.

Coefficient Curves (Cv)

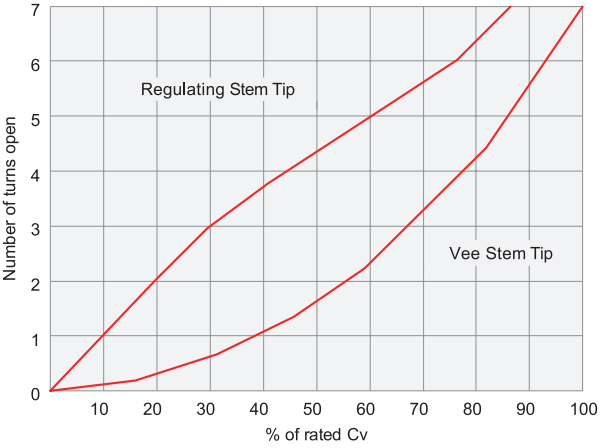

Ordering Information

Example : SHNV 20 - 1V - MP9 - GR - SS

1 2 3 4 5

1. Body Pattern

- 1 : 2-way straight
- 2 : 2-way angle
- 3 : 3-way, two pressure connections
- 4 : 3-way, one pressure connection
- 5 : 3-way, two stem connection valve
- 6 : Replaceable seat valve

2. Stem Type

- V : Vee stem
- R : Regulating stem

3. Connection Size & Type

Size (inch)	1/4	3/8	1/2	3/4	1
Medium Pressure	MP4	MP6	MP9	MP12	MP16

4. Packing Material

- Nil : PTFE (Standard)
- GR : Grafoil

5. Body Material

- SS : Stainless Steel

Specifications

Two Way Straight Valves

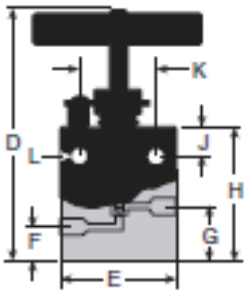

Part Number	Tube O.D	Oriffice	Dimensions, inch(mm)								Thick-ness
			D	E	F	G	H	J	K	L	
SHNV20-1V-MP4	1/4 (6.35)	0.125 (3.18)	4.69 (119.13)	2.00 (50.80)	0.38 (9.65)	0.81 (20.57)	2.00 (50.80)	0.38 (9.65)	1.24 (31.50)	0.22 (5.59)	0.75 (19.05)
SHNV20-1V-MP6	3/8 (9.53)	0.219 (5.56)	4.69 (119.13)	2.00 (50.80)	0.38 (9.65)	0.81 (20.57)	2.00 (50.80)	0.38 (9.65)	1.24 (31.50)	0.22 (5.59)	0.75 (19.05)
SHNV20-1V-MP9	9/16 (14.29)	0.312 (7.92)	5.93 (150.86)	2.50 (63.50)	0.50 (12.70)	1.13 (28.70)	2.88 (73.15)	0.50 (12.70)	1.38 (35.05)	0.34 (8.64)	1.00 (25.40)
SHNV20-1V-MP12	3/4 (19.05)	0.438 (11.13)	7.00 (177.80)	3.00 (76.20)	0.75 (19.05)	1.50 (38.10)	3.75 (95.25)	0.63 (16.00)	1.76 (44.70)	0.44 (11.18)	1.38 (35.05)
SHNV20-1V-MP16	1 (25.4)	0.562 (14.27)	9.00 (228.60)	4.12 (104.65)	0.88 (22.35)	1.82 (46.22)	4.63 (117.60)	1.13 (28.70)	2.50 (63.50)	0.56 (14.22)	1.75 (44.45)

Two Way Angle Valves

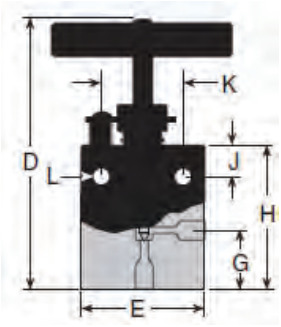

Part Number	Tube O.D	Oriffice	Dimensions, inch(mm)							Thick-ness
			D	E	G	H	J	K	L	
SHNV20-2V-MP4	1/4 (6.35)	0.125 (3.18)	4.81 (122.25)	2.00 (50.80)	1.25 (31.75)	2.44 (61.90)	0.38 (9.65)	1.24 (31.50)	0.22 (5.59)	0.75 (19.05)
SHNV20-2V-MP6	3/8 (9.53)	0.219 (5.56)	4.81 (122.25)	2.00 (50.80)	1.25 (31.75)	2.44 (61.90)	0.38 (9.65)	1.24 (31.50)	0.22 (5.59)	0.75 (19.05)
SHNV20-2V-MP9	9/16 (14.29)	0.312 (7.92)	6.43 (163.56)	2.50 (63.50)	1.63 (41.40)	3.38 (85.85)	0.50 (12.70)	1.38 (35.05)	0.34 (8.64)	1.00 (25.40)
SHNV20-2V-MP12	3/4 (19.05)	0.438 (11.13)	7.50 (190.50)	3.00 (76.20)	2.00 (50.80)	4.25 (107.95)	0.63 (16.00)	1.76 (44.70)	0.44 (11.18)	1.38 (35.05)
SHNV20-2V-MP16	1 (25.4)	0.562 (14.27)	9.00 (228.60)	4.12 (104.65)	2.31 (58.67)	5.12 (130.05)	1.13 (28.70)	2.50 (63.50)	0.56 (14.22)	1.75 (44.45)

Three Way Valves / Two Pressure Connections

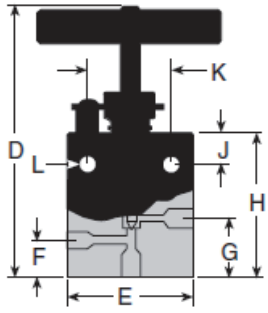

Part Number	Tube O.D	Oriffice	Dimensions, inch(mm)								Thick-ness
			D	E	F	G	H	J	K	L	
SHNV20-3V-MP4	1/4 (6.35)	0.125 (3.18)	5.00 (127.00)	2.00 (50.80)	1.00 (25.40)	1.44 (36.57)	2.63 (66.68)	0.38 (9.65)	1.24 (31.50)	0.22 (5.59)	0.75 (19.05)
SHNV20-3V-MP6	3/8 (9.53)	0.219 (5.56)	5.00 (127.00)	2.00 (50.80)	1.00 (25.40)	1.44 (36.57)	2.63 (66.68)	0.38 (9.65)	1.24 (31.50)	0.22 (5.59)	0.75 (19.05)
SHNV20-3V-MP9	9/16 (14.29)	0.312 (7.92)	6.51 (165.59)	2.50 (63.50)	1.25 (31.75)	1.88 (47.75)	3.63 (92.08)	0.50 (12.70)	0.38 (35.05)	0.34 (8.64)	1.00 (25.40)
SHNV20-3V-MP12	3/4 (19.05)	0.438 (11.13)	7.88 (200.03)	3.00 (76.20)	1.63 (41.28)	2.38 (60.45)	4.63 (117.60)	0.63 (16.00)	1.76 (44.70)	0.44 (11.18)	1.38 (35.05)
SHNV20-3V-MP16	1 (25.4)	0.562 (14.27)	9.75 (247.89)	4.12 (104.65)	2.13 (54.10)	3.07 (77.97)	5.88 (149.35)	1.13 (28.70)	2.50 (63.50)	0.56 (14.22)	1.75 (44.45)

• All dimensions in millimeters unless specified as “inch”. Dimension are for reference only, subject to change.

Specifications

Three Way Valves / One Pressure Connection

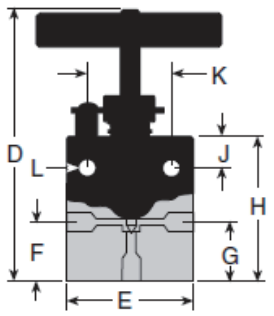

Part Number	Tube O.D	Oriffice	Dimensions, inch(mm)								Thick-ness
			D	E	F	G	H	J	K	L	
SHNV20-4V-MP4	1/4 (6.35)	0.125 (3.18)	4.81 (122.25)	2.00 (50.80)	1.25 (31.75)	1.25 (31.75)	2.44 (61.90)	0.38 (9.65)	1.24 (31.50)	0.22 (5.59)	0.75 (19.05)
SHNV20-4V-MP6	3/8 (9.53)	0.219 (5.56)	4.81 (122.25)	2.00 (50.80)	1.25 (31.75)	1.25 (31.75)	2.44 (61.90)	0.38 (9.65)	1.24 (31.50)	0.22 (5.59)	0.75 (19.05)
SHNV20-4V-MP9	9/16 (14.29)	0.312 (7.92)	6.43 (163.56)	2.50 (63.50)	1.63 (41.40)	1.63 (41.40)	3.38 (85.85)	0.50 (12.70)	1.38 (35.05)	0.34 (8.64)	1.00 (25.40)
SHNV20-4V-MP12	3/4 (19.05)	0.438 (11.13)	7.50 (190.50)	3.00 (76.20)	2.00 (50.80)	2.00 (50.80)	4.25 (107.95)	0.63 (16.00)	1.76 (44.70)	0.44 (11.18)	1.38 (35.05)
SHNV20-4V-MP16	1 (25.4)	0.562 (14.27)	9.00 (228.84)	4.12 (104.65)	2.31 (58.67)	2.31 (58.67)	5.12 (130.05)	1.13 (28.70)	2.50 (63.50)	0.56 (14.22)	1.75 (44.45)

Three Way / Two Stem Connection Valves

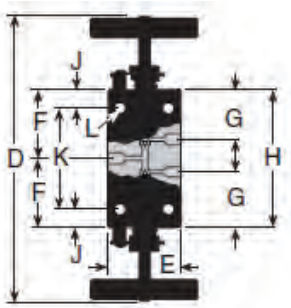

Part Number	Tube O.D	Oriffice	Dimensions, inch(mm)								Thick-ness
			D	E	F	G	H	J	K	L	
SHNV20-5V-MP4	1/4 (6.35)	0.125 (3.18)	8.13 (206.38)	2.00 (50.80)	1.69 (42.85)	1.00 (25.40)	3.38 (85.73)	0.38 (9.65)	2.62 (66.55)	0.22 (5.59)	0.75 (19.05)
SHNV20-5V-MP6	3/8 (9.53)	0.219 (5.56)	8.13 (206.38)	2.00 (50.80)	1.69 (42.85)	1.00 (25.40)	3.38 (85.73)	0.38 (9.65)	2.62 (66.55)	0.22 (5.59)	0.75 (19.05)
SHNV20-5V-MP9	9/16 (14.29)	0.312 (7.92)	11.31 (287.56)	2.50 (63.50)	2.56 (65.07)	1.63 (41.40)	5.13 (130.18)	0.50 (12.70)	4.13 (104.80)	0.34 (8.64)	1.00 (25.40)
SHNV20-5V-MP12	3/4 (19.05)	0.438 (11.13)	13.00 (330.20)	3.00 (76.20)	3.25 (82.55)	2.00 (50.80)	6.50 (165.10)	0.63 (16.00)	5.24 (133.10)	0.44 (11.18)	1.38 (35.05)
SHNV20-5V-MP16	1 (25.4)	0.562 (14.27)	15.44 (392.42)	4.12 (104.65)	3.75 (95.25)	1.88 (47.75)	7.50 (190.50)	1.13 (28.70)	5.24 (133.10)	0.56 (14.22)	1.75 (44.45)

Replaceable Seat Valves

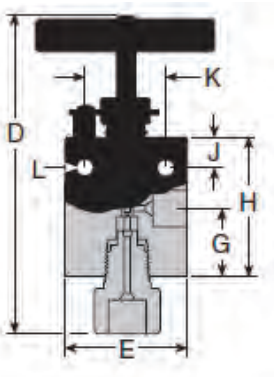

Part Number	Tube O.D	Oriffice	Dimensions, inch(mm)							Thick-ness
			D	E	G	H	J	K	L	
SHNV20-6V-MP4	1/4 (6.35)	0.125 (3.18)	5.75 (146.05)	2.00 (50.80)	1.06 (26.92)	2.25 (57.15)	0.38 (9.65)	1.24 (31.50)	0.22 (5.59)	0.75 (19.05)
SHNV20-6V-MP6	3/8 (9.53)	0.219 (5.56)	5.75 (146.05)	2.00 (50.80)	1.06 (26.92)	2.25 (57.15)	0.38 (9.65)	1.24 (31.50)	0.22 (5.59)	0.75 (19.05)
SHNV20-6V-MP9	9/16 (14.29)	0.312 (7.92)	7.34 (186.68)	2.50 (63.50)	1.38 (35.05)	3.13 (79.38)	0.50 (12.70)	1.38 (35.05)	0.34 (8.64)	1.00 (25.40)
SHNV20-6V-MP12	3/4 (19.05)	0.438 (11.13)	9.00 (228.60)	3.00 (76.20)	2.00 (50.80)	4.25 (107.95)	0.63 (16.00)	1.76 (44.70)	0.44 (11.18)	1.38 (35.05)
SHNV20-6V-MP16	1 (25.4)	0.562 (14.27)	11.00 (279.64)	4.12 (104.65)	2.56 (65.02)	5.25 (133.35)	1.13 (28.70)	2.50 (63.50)	0.56 (14.22)	1.75 (44.45)

• All dimensions in millimeters unless specified as “inch”. Dimension are for reference only, subject to change.

High Pressure Needle Valves

SHNV60 Series - 60,000 psi (4,140 bar)

Features

- Pressures to 60,000 psi (4,140 bar)
- Non-rotating stem tips.
- Available sizes are 1/4", 3/8", 9/16" and 1".
- Type 316 stainless steel high tensile bodies.
- Choice of VEE or Regulating stem tip.
- Packing set consists of multiple Teflon packing with nylon back up.

Specifications

- Maximum Working Pressure rating: 60,000psig (4,140bar) @72 F°(22 C°)
- Temperature rating: 0 to 450 F°(-17.8 to 232 C°) with Teflon packing and up to 1200 F°(648 C°) with optional grafoil packing.

Technical Data

Valve Flow Coefficient

Tube O.D In.	Connection	Orifice In. (mm)	*Cv	Pressure / Temperature Rating psi (bar) @72 F°(22 C°)
1/4"	HP4	0.094" (2.39)	0.12	30,000 psi (2,070 bar)
3/8"	HP6	0.125" (3.18)	0.23	30,000 psi (2,070 bar)
9/16"	HP9	0.187" (4.74)	1.33	30,000 psi (2,070 bar)
1"	HP16	0.438" (11.12)	2.80	30,000 psi (2,070 bar)

*Cv values listed are for 2-way straight pattern valves.
For 2-way angle pattern valves, increase Cv value by 50%.

Valve Flow Coefficient

Tube O.D In.	Connection	Orifice In. (mm)	*Cv	Pressure / Temperature Rating psi (bar) @72 F°(22 C°)
9/16"	HP9	0.109" (2.76)	0.28	40,000 psi (2,760 bar)
1/4"	HP4	0.062" (1.57)	0.08	60,000 psi (4,140 bar)
3/8"	HP6	0.062" (1.57)	0.09	60,000 psi (4,140 bar)
9/16"	HP9	0.078" (1.98)	0.14	60,000 psi (4,140 bar)

*Cv values listed are for 2-way straight pattern valves.
For 2-way angle pattern valves, increase Cv value by 50%.

Technical Data

Coefficient Curves (Cv) 30,000psi - 1/4", 3/8", 9/16"

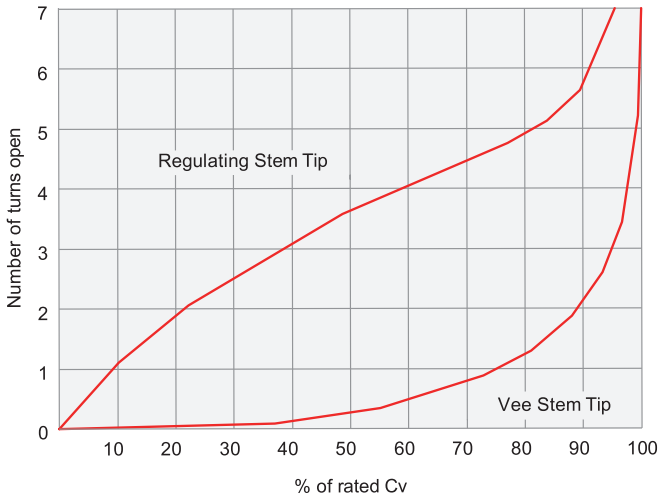

Coefficient Curves (Cv) 30,000psi - 1"

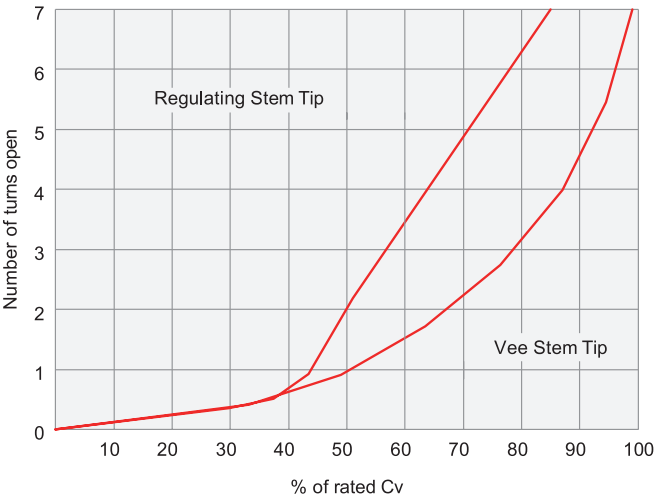

Coefficient Curves (Cv) 40,000psi - 9/16"

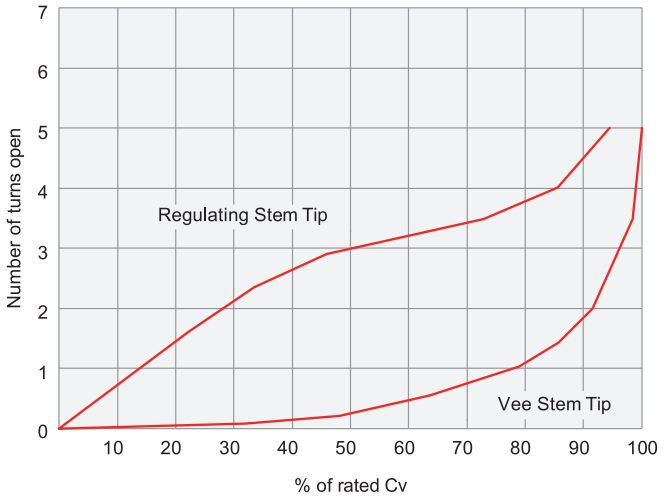

Coefficient Curves (Cv) 60,000psi - 1/4", 3/8", 9/16"

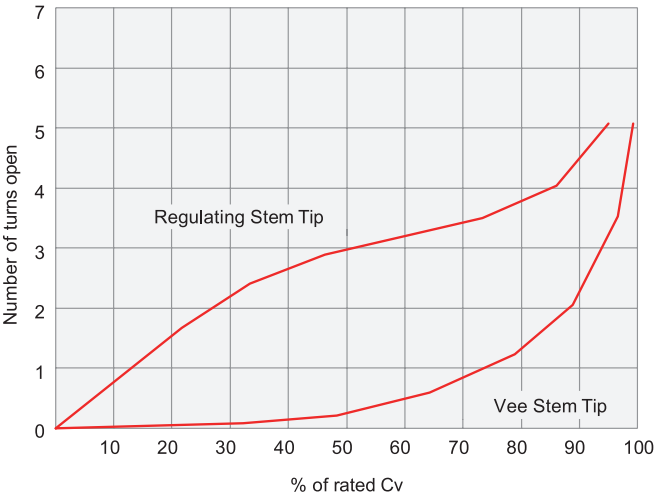

Ordering Information

Example : SHNV30 - 1V - HP4 - GR - SS

1 2 3 4 5 6

1. Valve Series

- SHNV30 : 30,000 psi valve
- SHNV40 : 40,000 psi valve
- SHNV60 : 60,000 psi valve

2. Body Pattern

- 1 : 2-way straight
- 2 : 2-way angle
- 3 : 3-way, two pressure connections
- 4 : 3-way, one pressure connection
- 5 : 3-way, two stem connection valve
- 6 : Replaceable seat valve

3. Stem Type

- V : Vee stem
- R : Regulating stem

4. Connection Size & Type

Size (inch)	1/4	3/8	9/16	1
High Pressure	HP4	HP6	HP9	HP16

5. Packing Material

- Nil : PTFE (Standard)
- GR : Grafoil

6. Body Material

- SS : Stainless Steel

Table of dimensions

Two Way Straight Valves

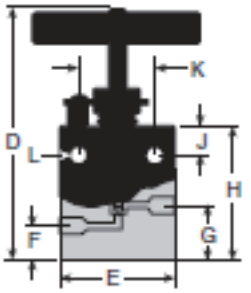

Two Way Angle Valves

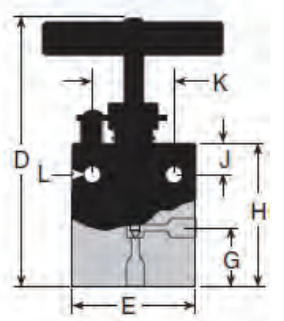

Two Way Straight Valves

Part Number	Tube O.D	Oriffice	Dimensions, inch(mm)								Thickness
			D	E	F	G	H	J	K	L	
SHNV30-1V-HP4	1/4 (6.35)	0.094 (2.39)	4.62 (117.35)	2.00 (50.80)	0.50 (12.70)	0.88 (22.35)	2.00 (50.80)	0.38 (9.65)	1.38 (35.05)	0.22 (5.59)	1.00 (25.40)
SHNV30-1V-HP6	3/8 (9.53)	0.125 (3.18)	4.68 (118.87)	2.00 (50.80)	0.50 (12.70)	0.88 (22.35)	2.00 (50.80)	0.38 (9.65)	1.38 (35.05)	0.22 (5.59)	1.00 (25.40)
SHNV30-1V-HP9	9/16 (14.29)	0.187 (4.74)	5.06 (128.52)	2.62 (66.55)	0.88 (22.35)	1.32 (33.52)	2.44 (61.98)	0.38 (9.65)	1.38 (35.05)	0.28 (7.11)	1.50 (38.10)
SHNV30-1V-HP16	1 (25.4)	0.438 (11.13)	8.42 (213.86)	4.13 (104.90)	0.94 (23.87)	1.69 (42.92)	4.44 (112.77)	1.12 (28.44)	2.50 (63.50)	0.56 (14.22)	1.75 (44.45)
SHNV40-1V-HP9	9/16 (14.29)	0.109 (2.76)	5.06 (128.52)	2.62 (66.55)	0.75 (19.05)	1.19 (30.22)	2.50 (63.50)	0.38 (9.65)	1.38 (35.05)	0.28 (7.11)	1.50 (38.10)
SHNV60-1V-HP4	1/4 (6.35)	0.062 (1.57)	4.75 (120.65)	2.00 (50.80)	0.43 (10.92)	0.81 (20.57)	2.12 (53.85)	0.38 (9.65)	1.38 (35.05)	0.22 (5.59)	1.00 (25.40)
SHNV60-1V-HP6	3/8 (9.53)	0.062 (1.57)	4.87 (123.70)	2.00 (50.80)	0.56 (14.22)	0.94 (23.87)	2.25 (57.15)	0.38 (9.65)	1.38 (35.05)	0.22 (5.59)	1.00 (25.40)
SHNV60-1V-HP9	9/16 (14.29)	0.078 (1.98)	5.13 (130.30)	2.62 (66.55)	0.75 (19.05)	1.19 (30.22)	2.50 (63.50)	0.38 (9.65)	1.38 (35.05)	0.28 (7.11)	1.50 (38.10)

Two Way Angle Valves

Part Number	Tube O.D	Oriffice	Dimensions, inch(mm)							Thickness
			D	E	G	H	J	K	L	
SHNV30-2V-HP4	1/4 (6.35)	0.094 (2.39)	4.62 (117.35)	2.00 (50.80)	0.88 (22.35)	2.00 (50.80)	0.38 (9.65)	1.38 (35.05)	0.22 (5.59)	1.00 (25.40)
SHNV30-2V-HP6	3/8 (9.53)	0.125 (3.18)	4.74 (120.40)	2.00 (50.80)	1.00 (25.40)	2.12 (53.85)	0.38 (9.65)	1.38 (35.05)	0.22 (5.59)	1.00 (25.40)
SHNV30-2V-HP9	9/16 (14.29)	0.187 (4.74)	5.06 (128.52)	2.62 (66.55)	1.32 (33.52)	2.44 (61.98)	0.38 (9.65)	1.38 (35.05)	0.28 (7.11)	1.50 (38.10)
SHNV30-2V-HP16	1 (25.4)	0.438 (11.13)	9.35 (237.49)	4.13 (104.90)	2.37 (60.20)	5.12 (130.04)	1.12 (28.44)	2.50 (63.50)	0.56 (14.22)	1.75 (44.45)
SHNV40-2V-HP9	9/16 (14.29)	0.109 (2.76)	5.37 (136.40)	2.62 (66.55)	1.50 (38.10)	2.81 (71.37)	0.38 (9.65)	1.38 (35.05)	0.28 (7.11)	1.50 (38.10)
SHNV60-2V-HP4	1/4 (6.35)	0.062 (1.57)	5.00 (127.00)	2.00 (50.80)	1.07 (27.17)	2.38 (60.45)	0.38 (9.65)	1.38 (35.05)	0.22 (5.59)	1.00 (25.40)
SHNV60-2V-HP6	3/8 (9.53)	0.062 (1.57)	5.25 (133.35)	2.00 (50.80)	1.31 (33.27)	2.62 (66.55)	0.38 (9.65)	1.38 (35.05)	0.22 (5.59)	1.00 (25.40)
SHNV60-2V-HP9	9/16 (14.29)	0.078 (1.98)	5.44 (138.18)	2.62 (66.55)	1.50 (38.10)	2.81 (71.37)	0.38 (9.65)	1.38 (35.05)	0.28 (7.11)	1.50 (38.10)

• All dimensions in millimeters unless specified as “inch”. Dimension are for reference only, subject to change.

Table of dimensions

Three Way Valves / Two Pressure Connections

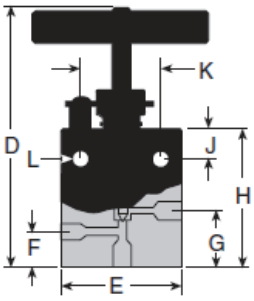

Three Way Valves / One Pressure Connection

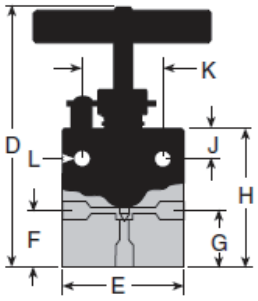

Three Way Valves / Two Pressure Connections

Part Number	Tube O.D	Oriffice	Dimensions, inch(mm)								Thickness
			D	E	F	G	H	J	K	L	
SHNV30-3V-HP4	1/4 (6.35)	0.094 (2.39)	4.74 (120.40)	2.00 (50.80)	0.62 (15.74)	1.00 (25.40)	2.12 (53.85)	0.38 (9.65)	1.38 (35.05)	0.22 (5.59)	1.00 (25.40)
SHNV30-3V-HP6	3/8 (9.53)	0.125 (3.18)	5.12 (130.05)	2.00 (50.80)	1.00 (25.40)	1.38 (35.05)	2.50 (63.50)	0.38 (9.65)	1.38 (35.05)	0.22 (5.59)	1.00 (25.40)
SHNV30-3V-HP9	9/16 (14.29)	0.187 (4.74)	5.49 (139.45)	2.62 (66.55)	1.32 (33.52)	1.76 (44.70)	2.88 (73.15)	0.38 (9.65)	1.38 (35.05)	0.28 (7.11)	1.50 (38.10)
SHNV30-3V-HP16	1 (25.4)	0.438 (11.13)	9.71 (246.63)	4.13 (104.90)	2.38 (60.45)	2.81 (71.37)	5.56 (141.22)	1.12 (28.44)	2.50 (63.50)	0.56 (14.22)	1.75 (44.45)
SHNV40-3V-HP9	9/16 (14.29)	0.109 (2.76)	6.06 (153.92)	2.62 (66.55)	1.43 (36.32)	1.88 (47.75)	3.31 (84.07)	0.38 (9.65)	1.38 (35.05)	0.28 (7.11)	1.50 (38.10)
SHNV60-3V-HP4	1/4 (6.35)	0.062 (1.57)	4.74 (120.40)	2.00 (50.80)	0.65 (17.52)	1.07 (27.17)	2.38 (60.45)	0.38 (9.65)	1.38 (35.05)	0.22 (5.59)	1.00 (25.40)
SHNV60-3V-HP6	3/8 (9.53)	0.062 (1.57)	4.87 (123.70)	2.00 (50.80)	1.06 (26.92)	1.44 (36.57)	2.75 (69.85)	0.38 (9.65)	1.38 (35.05)	0.22 (5.59)	1.00 (25.40)
SHNV60-3V-HP9	9/16 (14.29)	0.078 (1.98)	5.13 (130.30)	2.62 (66.55)	1.28 (32.51)	1.72 (43.68)	3.03 (76.96)	0.38 (9.65)	1.38 (35.05)	0.28 (7.11)	1.50 (38.10)

Three Way Valves / One Pressure Connection

Part Number	Tube O.D	Oriffice	Dimensions, inch(mm)								Thickness
			D	E	F	G	H	J	K	L	
SHNV30-4V-HP4	1/4 (6.35)	0.094 (2.39)	4.62 (117.35)	2.00 (50.80)	0.88 (22.35)	0.88 (22.35)	2.00 (50.80)	0.38 (9.65)	1.38 (35.05)	0.22 (5.59)	1.00 (25.40)
SHNV30-4V-HP6	3/8 (9.53)	0.125 (3.18)	4.74 (120.40)	2.00 (50.80)	1.00 (25.40)	1.00 (25.40)	2.12 (53.85)	0.38 (9.65)	1.38 (35.05)	0.22 (5.59)	1.00 (25.40)
SHNV30-4V-HP9	9/16 (14.29)	0.187 (4.74)	5.12 (130.05)	2.62 (66.55)	1.32 (33.52)	1.32 (33.52)	2.44 (61.98)	0.38 (9.65)	1.38 (35.05)	0.28 (7.11)	1.50 (38.10)
SHNV30-4V-HP16	1 (25.4)	0.438 (11.13)	9.35 (237.49)	4.13 (104.90)	2.37 (60.20)	2.37 (60.20)	5.12 (130.04)	1.12 (28.44)	2.50 (63.50)	0.56 (14.22)	1.75 (44.45)
SHNV40-4V-HP9	9/16 (14.29)	0.109 (2.76)	5.37 (136.40)	2.62 (66.55)	1.50 (38.10)	1.50 (38.10)	2.81 (71.37)	0.38 (9.65)	1.38 (35.05)	0.28 (7.11)	1.50 (38.10)
SHNV60-4V-HP4	1/4 (6.35)	0.062 (1.57)	5.00 (127.00)	2.00 (50.80)	1.07 (27.17)	1.07 (27.17)	2.38 (60.45)	0.38 (9.65)	1.38 (35.05)	0.22 (5.59)	1.00 (25.40)
SHNV60-4V-HP6	3/8 (9.53)	0.062 (1.57)	5.25 (133.35)	2.00 (50.80)	1.31 (33.27)	1.31 (33.27)	2.62 (66.55)	0.38 (9.65)	1.38 (35.05)	0.22 (5.59)	1.00 (25.40)
SHNV60-4V-HP9	9/16 (14.29)	0.078 (1.98)	5.44 (138.18)	2.62 (66.55)	1.50 (38.10)	1.50 (38.10)	2.81 (71.37)	0.38 (9.65)	1.38 (35.05)	0.28 (7.11)	1.50 (38.10)

• All dimensions in millimeters unless specified as “inch”. Dimension are for reference only, subject to change.

Table of dimensions

Three Way / Two Stem Connection Valves

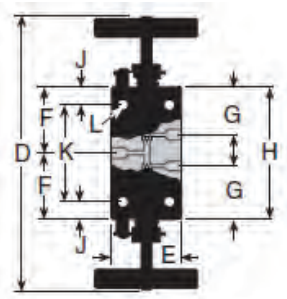

Replaceable Seat Valves

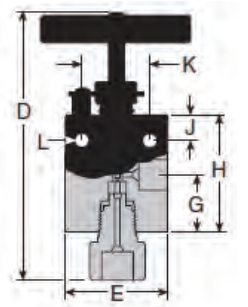

Three Way / Two Stem Connection Valves

Part Number	Tube O.D	Oriffice	Dimensions, inch(mm)								Thickness
			D	E	F	G	H	J	K	L	
SHNV30-5V-HP4	1/4 (6.35)	0.094 (2.39)	5.68 (144.27)	2.00 (50.80)	1.53 (38.86)	1.12 (28.45)	3.06 (77.72)	0.38 (9.65)	2.30 (58.42)	0.22 (5.59)	1.00 (25.40)
SHNV30-5V-HP6	3/8 (9.53)	0.125 (3.18)	5.87 (149.10)	2.00 (50.80)	1.62 (41.27)	1.12 (28.45)	3.25 (82.55)	0.38 (9.65)	2.49 (63.24)	0.22 (5.59)	1.00 (25.40)
SHNV30-5V-HP9	9/16 (14.29)	0.187 (4.74)	6.37 (161.80)	2.62 (66.55)	1.87 (47.62)	1.12 (28.45)	3.75 (95.25)	0.38 (9.65)	2.99 (75.94)	0.28 (7.11)	1.50 (38.10)
SHNV30-5V-HP16	1 (25.4)	0.438 (11.13)	11.81 (299.97)	4.13 (104.90)	3.87 (98.42)	2.75 (69.85)	7.75 (196.85)	1.12 (28.44)	5.51 (139.95)	0.56 (14.22)	1.75 (44.45)
SHNV40-5V-HP9	9/16 (14.29)	0.109 (2.76)	9.12 (231.65)	2.62 (66.55)	2.06 (52.32)	1.31 (33.27)	4.12 (104.65)	0.38 (9.65)	3.36 (85.34)	0.28 (7.11)	1.50 (38.10)
SHNV60-5V-HP4	1/4 (6.35)	0.062 (1.57)	6.07 (154.18)	2.00 (50.80)	1.72 (43.68)	1.31 (33.27)	3.44 (87.38)	0.38 (9.65)	2.68 (68.07)	0.22 (5.59)	1.00 (25.40)
SHNV60-5V-HP6	3/8 (9.53)	0.062 (1.57)	6.37 (161.80)	2.00 (50.80)	1.87 (47.62)	1.31 (33.27)	3.75 (95.25)	0.38 (9.65)	2.99 (75.94)	0.22 (5.59)	1.00 (25.40)
SHNV60-5V-HP9	9/16 (14.29)	0.078 (1.98)	6.37 (161.80)	2.62 (66.55)	2.06 (52.32)	1.31 (33.27)	4.12 (104.65)	0.38 (9.65)	3.36 (85.34)	0.28 (7.11)	1.50 (38.10)

Replaceable Seat Valves

Part Number	Tube O.D	Oriffice	Dimensions, inch(mm)							Thickness
			D	E	G	H	J	K	L	
SHNV30-6V-HP4	1/4 (6.35)	0.094 (2.39)	5.80 (147.32)	2.00 (50.80)	1.26 (32.00)	2.38 (60.45)	0.38 (9.65)	1.38 (35.05)	0.22 (5.59)	1.00 (25.40)
SHNV30-6V-HP6	3/8 (9.53)	0.125 (3.18)	6.05 (153.67)	2.00 (50.80)	1.26 (32.00)	2.38 (60.45)	0.38 (9.65)	1.38 (35.05)	0.22 (5.59)	1.00 (25.40)
SHNV30-6V-HP9	9/16 (14.29)	0.187 (4.74)	6.45 (163.83)	2.62 (66.55)	1.25 (31.75)	2.44 (61.98)	0.38 (9.65)	1.38 (35.05)	0.28 (7.11)	1.50 (38.10)
SHNV30-6V-HP16	1 (25.4)	0.438 (11.13)	10.56 (268.22)	4.13 (104.90)	2.31 (58.67)	5.12 (130.04)	1.12 (28.44)	2.50 (63.50)	0.56 (14.22)	1.75 (44.45)
SHNV40-6V-HP9	9/16 (14.29)	0.109 (2.76)	6.45 (163.83)	2.62 (66.55)	1.25 (31.75)	2.44 (61.98)	0.38 (9.65)	1.38 (35.05)	0.28 (7.11)	1.50 (38.10)
SHNV60-6V-HP4	1/4 (6.35)	0.062 (1.57)	6.28 (159.51)	2.00 (50.80)	1.31 (33.27)	2.62 (66.55)	0.38 (9.65)	1.38 (35.05)	0.22 (5.59)	1.00 (25.40)
SHNV60-6V-HP6	3/8 (9.53)	0.062 (1.57)	6.52 (165.60)	2.00 (50.80)	1.31 (33.27)	2.62 (66.55)	0.38 (9.65)	1.38 (35.05)	0.22 (5.59)	1.00 (25.40)
SHNV60-6V-HP9	9/16 (14.29)	0.078 (1.98)	6.90 (175.26)	2.62 (66.55)	1.31 (33.27)	2.62 (66.55)	0.38 (9.65)	1.38 (35.05)	0.28 (7.11)	1.50 (38.10)

• All dimensions in millimeters unless specified as “inch”. Dimension are for reference only, subject to change.

High Pressure Ball Valves

SHBV Series - 10,000, 15,000 and 20,000 psi

Features

- Trunnion mounted style, ideal for severe duty applications.
- Two-way and three-way valve configurations.
- Three-way, quarter turn diverter and half turn switching models.
- Full-port flow path minimizes pressure drop.
- PEEK seats offer excellent resistance to chemicals, heat, and wear/abrasion.
- Type 316 stainless steel high tensile bodies.
- Electric and pneumatic actuator options.
- Viton O-ring for operation from 0°F (-17.8°C) to 400°F (204°C)
- Optional O-rings available.
- Wide selection of tube and pipe end fittings available.

Technical Data

Pressure & Temperature Curve

SHBV10 Series

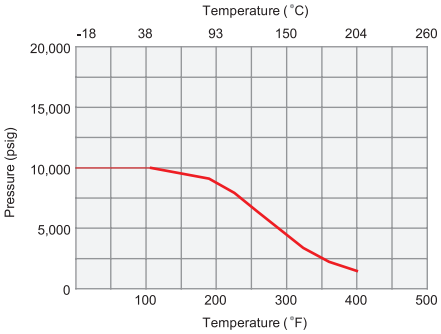

SHBV15 Series

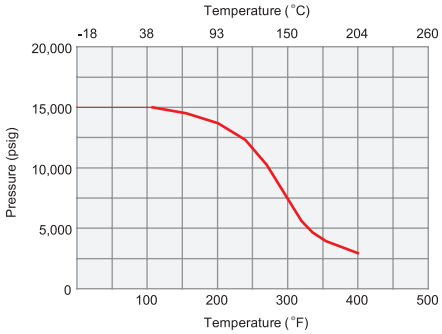

SHBV20 Series

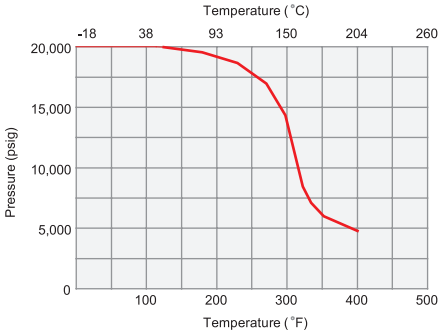

Ordering Information

Example : **SHBV 203 - MP9 - 4 - SS**

1 2 3 4 5

1. Valve Series

- SHBV10 : 10,000 psi
- SHBV15 : 15,000 psi
- SHBV20 : 20,000 psi

2. Body Style

- Nil : 2-WAY Straight Valve
- 3 : 3-WAY VALVE, 180° Turn
- 3Q : 3-WAY VALVE, 90° Turn

3. Connection Size & Type

Size (inch)	1/8	1/4	3/8	1/2	9/16	3/4	1
NPT(Female)	F2N	F4N	F6N	F8N	-	F12N	F16N
Medium Pressure	-	MP4	MP6	-	MP9	MP12	-
High Pressure	-	HP4	HP6	-	HP9	-	-

4. Orifice Size

4 : 6.35mm / 6 : 9.53mm / 8 : 12.7mm

5. Body Material

- SS : Stainless Steel / 276 : Hastelloy / 625 : Inconel 625

Table of dimensions

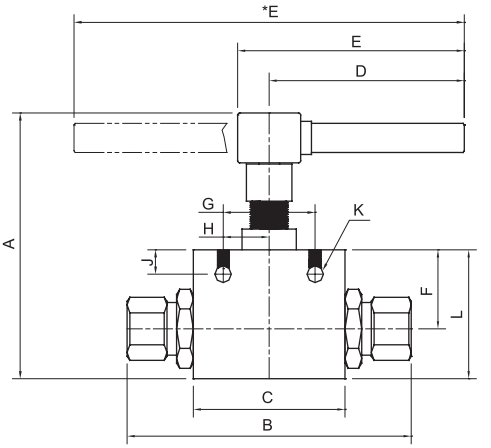

Three Way / Two Stem Connection Valves

Part Number	Tube O.D	Oriffice	Dimensions, inches(mm)											Thickness
			A	B	C	D	E	F	G	H	J	K	L	
SHBV10-MP12-8	MP 3/4"	0.5 (12.7)	5.97 (126.3)	7.73 (196.5)	4.13 (104.8)	5.13 (130.2)	*10.25 (260.4)	1.76 (44.7)	3 (76.2)	1.5 (38.1)	0.5 (12.7)	0.28 (7.1)	3.09 (78.6)	1.75 (44.5)
SHBV10-MP16-8	MP 1"													
SHBV10-F12N-8	F.NPT 3/4"													
SHBV10-F16N-8	F.NPT 1"													
SHBV15-F2N-4	F.NPT 1/8"	0.25 (6.35)	4.33 (110)	4.19 (106.5)	2 (50.8)	3.37 (85.6)	3.9 (99)	1.13 (28.6)	1.5 (38.1)	0.75 (19.1)	0.43 (10.9)	0.28 (7.1)	1.91 (48.4)	1 (25.4)
SHBV15-F4N-4	F.NPT 1/4"													
SHBV15-F6N-4	F.NPT 3/8"													
SHBV15-F8N-4	F.NPT 1/2"													
SHBV15-F4N-6	F.NPT 1/4"	0.375 (9.53)	4.97 (126.3)	5.53 (140.4)	3 (76.2)	4.99 (126.8)	5.52 (140.3)	1.38 (34.9)	2 (50.8)	1 (25.4)	0.41 (10.3)	0.28 (7.1)	2.5 (63.5)	1.38 (34.9)
SHBV15-F6N-6	F.NPT 3/8"													
SHBV15-F8N-6	F.NPT 1/2"													
SHBV20-MP4-4	MP 1/4"	0.11 (2.79)	4.33 (110)	4.19 (106.5)	2 (50.8)	3.37 (85.6)	3.9 (99)	1.13 (28.6)	1.5 (38.1)	0.75 (19.1)	0.43 (10.9)	0.28 (7.1)	1.91 (48.4)	1 (25.4)
SHBV20-MP6-4	MP 3/8"	0.2 (5.2)												
SHBV20-MP9-4	MP 9/16"	0.25 (6.35)												
SHBV20-HP4-4	HP 1/4"	0.094 (2.4)												
SHBV20-HP6-4	HP 3/8"	0.125 (3.2)												
SHBV20-HP9-4	HP 9/16"	0.19 (4.8)												
SHBV20-MP6-6	MP 3/8"	0.2 (5.2)	4.97 (126.3)	5.53 (140.4)	3 (76.2)	4.99 (126.8)	5.52 (140.3)	1.38 (34.9)	2 (50.8)	1 (25.4)	0.41 (10.3)	0.28 (7.1)	2.5 (63.5)	1.38 (34.9)
SHBV20-MP9-6	MP 9/16"	0.31 (7.9)												
SHBV20-MP12-6	MP 3/4"	0.375 (9.53)												

• All dimensions are for reference only, subject to change.

Table of dimensions

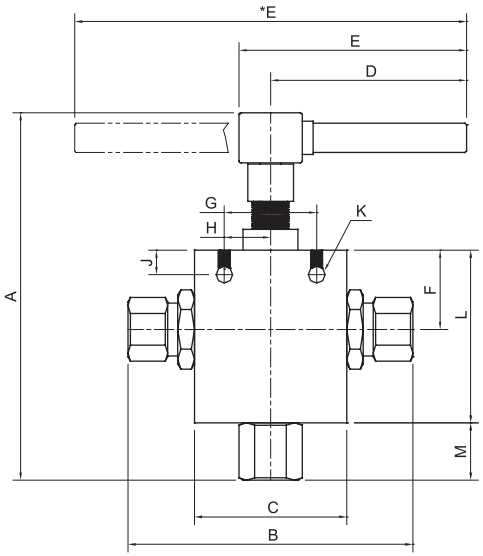

Three Way / Two Stem Connection Valves

Order Number	Connection	Oriffice	Dimensions, inches(mm)												Thickness
			A	B	C	D	E	F	G	H	J	K	L	M	
SHBV103-MP12-8	MP 3/4"	0.5 (12.7)	7.83 (198.8)	7.77 (197.4)	4.13 (104.8)	5.13 (130.2)	*10.25 (260.4)	1.66 (42.2)	3 (76.2)	1.5 (38.1)	0.5 (12.7)	0.28 (7.1)	3.34 (84.9)	1.7 (43.2)	1.75 (44.5)
SHBV103-MP16-8	MP 1"														
SHBV103-F12N-8	F.NPT 3/4"														
SHBV103-F16N-8	F.NPT 1"														
SHBV153-F2N-4	F.NPT 1/8"	0.19 (4.8)	5.64 (143.4)	4.72 (119.9)	2.5 (63.5)	3.37 (85.6)	3.9 (99)	1.13 (28.6)	1.5 (38.1)	0.75 (19.1)	0.43 (10.9)	0.28 (7.1)	2.25 (57.2)	0.97 (24.6)	1 (25.4)
SHBV153-F4N-4	F.NPT 1/4"														
SHBV153-F6N-4	F.NPT 3/8"														
SHBV153-F8N-4	F.NPT 1/2"														
SHBV153-MP6-6	MP 3/8"	0.2 (5.2)	6.55 (166.4)	5.74 (145.8)	3 (76.2)	4.99 (126.8)	5.52 (140.3)	1.38 (34.9)	2 (50.8)	1 (25.4)	0.41 (10.3)	0.28 (7.1)	2.88 (73)	1.19 (30.2)	1.38 (34.9)
SHBV153-MP9-6	MP 9/16"	0.31 (7.9)													
SHBV153-MP12-6	MP 3/4"	0.33 (8.3)													
SHBV153-F4N-6	F.NPT 1/4"														
SHBV153-F6N-6	F.NPT 3/8"														
SHBV153-F8N-6	F.NPT 1/2"														
SHBV203-MP4-4	MP 1/4"	0.11 (2.79)	5.64 (143.4)	4.72 (119.9)	2.5 (63.5)	3.37 (85.6)	3.9 (99)	1.13 (28.6)	1.5 (38.1)	0.75 (19.1)	0.43 (10.9)	0.28 (7.1)	2.25 (57.2)	0.97 (24.6)	1 (25.4)
SHBV203-MP6-4	MP 3/8"	0.19 (4.8)													
SHBV203-MP9-4	MP 9/16"														
SHBV203-HP4-4	HP 1/4"	0.094 (2.4)													
SHBV203-HP6-4	HP 3/8"	0.125 (3.2)													
SHBV203-HP9-4	HP 9/16"	0.19 (4.8)													

All dimensions are for reference only, subject to change.

High Pressure Check Valves

SHPCV Series - 20,000 and 60,000 psi

Features

- Tubing size available for 1/4” to 1”.
- Maximum working pressure :
  - SHPCV20 Series : 20,000 psig (1379 bar).
  - SHPCV60 Series : 60,000 psig (4137 bar).
- Working temperature :
  - O-ring type : -50°F (-45°C) to 500°F (260°C).
  - Ball type : -110°F (-79°C) to 1200°F (649°C).
- Cracking pressure : 14 psig ~ 26 psig (0.966 bar ~ 1.794 bar).

Materials of Construction

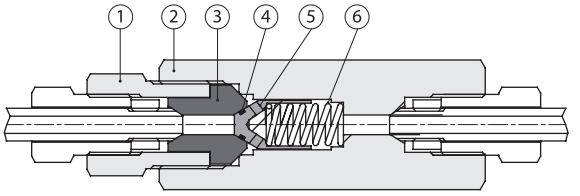

O-Ring Check Valve

No.	Description	Material
1	Insert Gland	SS316 / A479
2	Body	SS316 / A479
3	Insert	SS316 / A479
4	O-Ring	Viton (Standard) / NBR / Kalrez
5	Poppet	SS316 / A479
6	Spring	304 Stainless Steel

* Provides unidirectional flow and tight shut-off for liquids and gas with high reliability.
When differential drops below cracking pressure, valve shuts off. (Not for use as relief valve)

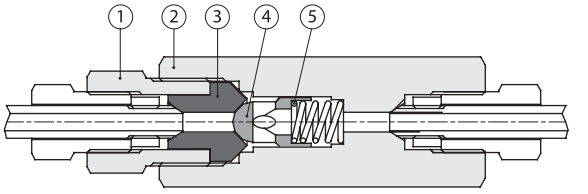

Ball Check Valve

No.	Description	Material
1	Insert Gland	SS316 / A479
2	Body	SS316 / A479
3	Insert	SS316 / A479
4	Ball Poppet	SS316 / A479
5	Spring	304 Stainless Steel

* Prevents reverse flow where leak-tight shut-off is not mandatory.
When differential drops below cracking pressure, valve closes. (Not for use as relief valve)

Ordering Information

Example : **SHPCV 20 - MP9 - BP - K - SS**

1 2 3 4 5

1. Valve Series

- SHPCV20 : 20,000 psi
- SHPCV60 : 60,000 psi

2. Connection Size & Type

Size (inch)	1/4	3/8	9/16	3/4	1
Medium Pressure	MP4	MP6	MP9	MP12	MP16
High Pressure	HP4	HP6	HP9	-	-

3. Poppet Type

- Nil : O-Ring Check Valve
- BP : Ball Check Valve

4. O-Ring Material

- Nil : Viton (Standard)
- N : NBR
- K : Kalrez

5. Body Material

- SS : Stainless Steel

Table of dimensions

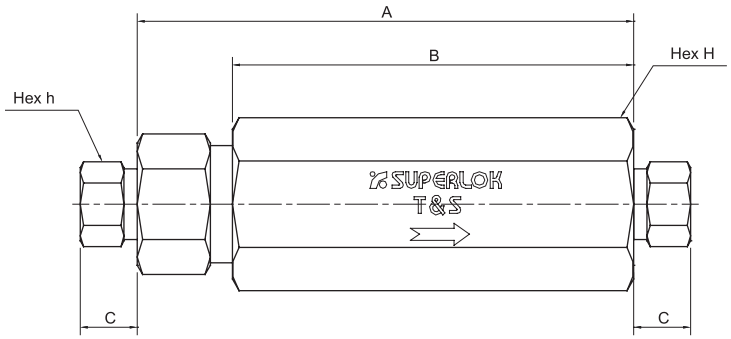

SHPCV20 Series

Order Number	Connection	Oriffice	Cv	Dimensions, inches (mm)					Pressure / Temperature Rating psig (bar) @ 100°F (38 °C)
				A	B	C	h	H	
SHPCV20-MP4	MP 1/4"	0.125 (3.18)	0.28	2.94 (74.68)	2.5 (63.5)	0.38 (9.65)	0.5 (12.7)	0.81 (20.6)	20,000 (1379)
SHPCV20-MP6	MP 3/8"	0.218 (5.54)	0.84	3.12 (79.25)	2.62 (66.55)	0.47 (11.94)	0.62 (15.75)	1 (25.4)	
SHPCV20-MP9	MP 9/16"	0.359 (9.12)	2.3	4.18 (106.17)	3.5 (88.9)	0.53 (13.46)	0.94 (23.9)	1.38 (35.05)	
SHPCV20-MP12	MP 3/4"	0.516 (13.11)	4.7	5.5 (139.7)	4.75 (120.65)	0.62 (15.75)	1.19 (30.2)	1.75 (44.45)	
SHPCV20-MP16	MP 1"	0.688 (17.48)	7.4	6.63 (168.4)	5.75 (146.05)	0.72 (18.29)	1.38 (35.05)	2.12 (53.85)	

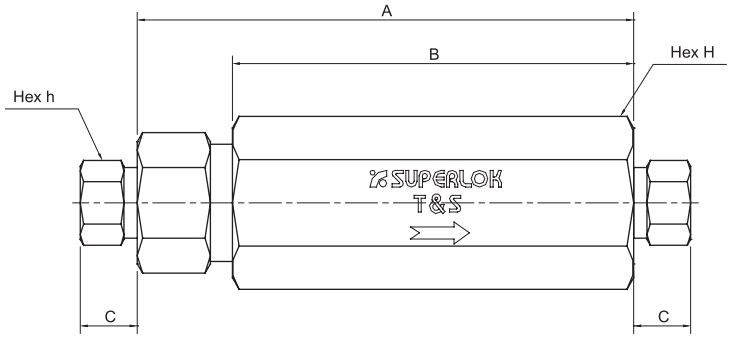

SHPCV60 Series

Order Number	Connection	Oriffice	Cv	Dimensions, inches (mm)					Pressure / Temperature Rating psig (bar) @ 100°F (38 °C)
				A	B	C	h	H	
SHPCV60-HP4	HP 1/4"	0.094 (2.4)	0.15	3.38 (85.85)	2.50 (63.5)	0.5 (12.7)	0.63 (16)	1.18 (30)	60,000 (4137)
SHPCV60-HP6	HP 3/8"	0.125 (3.2)	0.28	3.75 (95.25)	2.62 (66.55)	0.53 (13.5)	0.75 (19.05)	1.18 (30)	
SHPCV60-HP9	HP 9/16"	0.187 (4.75)	0.63	4.62 (117.35)	3.38 (85.85)	0.81 (20.57)	1.12 (28.45)	1.5 (38.1)	

All dimensions are for reference only, subject to change.

High Pressure Relief Valves

SHRV Series - 20,000 and 60,000 psi

Features

SHRV20 Series

- Soft seat relief valves.
- Set pressure : 1,500 to 20,000psig (103.4 to 1378.9 bar).
- Working temperature : 32°F (0°C) to 400°F (204°C).
- Liquid or gas service. Provide bubble tight shut-off of gas.
- Pressure settings are made at the factory and valves are tagged accordingly.
- Lock wire secure cap to maintain set pressure.
- Easily exchangeable seat.

SHRV60 Series

- Metal seat relief valves.
- Set pressure : 3,000 to 60,000psig (206.8 to 4136.8 bar).
- Working temperature : -110°F (-79°C) to 500°F (260°C).
- Liquid or gas service. Provide shut-off of liquids and gases under pressure to commercial tightness standards.
- Pressure settings are made at the factory and valves are tagged accordingly.
- Lock wired secure cap to maintain set pressure.
- Easily exchangeable seat.

Technical Data

SHRV20 Series

Grade	Inlet		Outlet Connection Type	Orifice Size In. (mm)	Cv	Pressure Rating psig (bar) @ 100°F (38 °C)		
	Tube O.D In.	Connection Type				Minimum Set Pressure	Maximum Set Pressure	Maximum Back Pressure
1A	9/16"	MP9	F.NPT 3/4"	0.312 (7.92)	1.2	1500 (103.4)	5000 (344.7)	500 (34.5)
2A				0.250 (6.35)	0.8	5000 (344.7)	10,000 (689.5)	
3A				0.156(3.96)	0.3	10,000 (689.5)	20,000 (1378.9)	

* Maximum system operation pressure should not exceed 90% of relief valve set pressure.

SHRV60 Series

Grade	Inlet		Outlet Connection Type	Orifice Size In. (mm)	Cv	Pressure Rating psig (bar) @ 100°F (38 °C)		
	Tube O.D In.	Connection Type				Minimum Set Pressure	Maximum Set Pressure	Maximum Back Pressure
1A	9/16"	MP9	F.NPT 3/4"	0.312 (7.92)	1.2	3000 (206.8)	5000 (344.7)	500 (34.5)
2A				0.250 (6.35)	0.8	5000 (344.7)	10,000 (689.5)	
3A				0.188 (4.78)	0.45	10,000 (689.5)	15,000 (1034.2)	
4A				0.156 (3.96)	0.3	15,000 (1034.2)	20,000 (1378.9)	
5A	3/8"	HP6		0.125 (3.18)	0.2	20,000 (1378.9)	30,000 (2068.4)	
6A				0.093 (2.36)	0.1	25,000 (1723.7)	45,000 (3102.6)	
7A				0.078 (1.98)	0.07	30,000 (2068.4)	60,000 (4136.8)	

* Maximum system operation pressure should not exceed 90% of relief valve set pressure.

Ordering Information

Example : **SHRV20 - MP9 - F12N - 3A - SS**

1 2 3 4 5

1. Valve Series
- SHBV20 : 20,000 psi
- SHBV60 : 60,000 psi

2. Inlet Tube O.D
- MP9 : Medium Pressure 9/16”
- HP6 : High Pressure 3/8” (SHRV60 only)

3. Outlet Connection Size
- F12N : Female 3/4”
NPT

4. Grade (Set Pressure)
- Nil : O-Ring Check Valve
- BP : Ball Check Valve

1A	1500 ~ 5000 psig SHRV20 Series
	3000 ~ 5000 psig SHRV60 Series
2A	5000 ~ 10,000 psig
3A	10,000 ~ 15,000 psig
4A	15,000 ~ 20,000 psig
5A	20,000 ~ 30,000 psig
6A	25,000 ~ 45,000 psig
7A	30,000 ~ 60,000 psig

5. Body Material
- SS : Stainless Steel

Table of dimensions

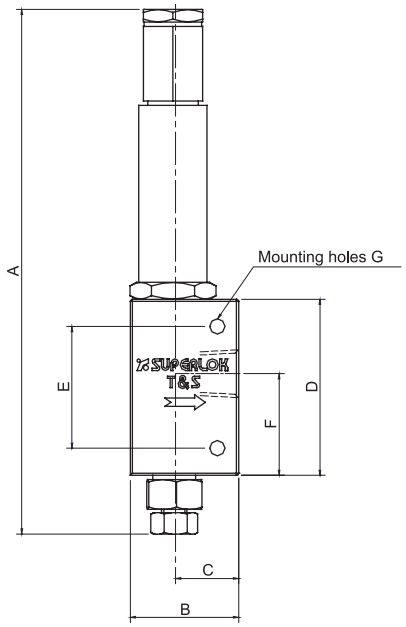

Dimensions, inches (mm)						
A	B	C	D	E	F	G
9.46 (240.4)	2 (50.8)	1.19 (30.2)	3.25 (82.6)	2.25 (57.1)	1.94 (49.3)	0.28 (7.1)

All dimensions are for reference only, subject to change.

High Pressure Valves

SUPERLOK®

Needle Valve Series

Integral Bonnet Needle Valves | Union Bonnet Needle Valves
Integral Bonnet Bar Stock Needle Valves
High Pressure Bar Stock Needle Valves
Instrumentation Manifold & Gauge Valves

www.superlok.com

Integral Bonnet Needle Valves

SINV Series

Features

- Compact design
- Low operating torques
- Panel mountable
- Straight and angle flow patterns
- Bar and round knob handle are available
- Three stem type are available

Specifications

Temperature Ratings	316 Stainless Steel with PTFE packing : -65°F to 450°F (-53°C to 232°C)		
	316 Stainless Steel with PEEK packing : -65°F to 600°F (-53°C to 315°C)		
	Brass : -65°F to 400°F (-53°C to 204°C)		
	Alloy400 with PTFE packing : -65°F to 450°F (-53°C to 232°C)		
	Alloy400 with PEEK packing : -65°F to 500°F (-53°C to 260°C)		
	PCTFE Stem Tip : -65°F to 200°F (-53°C to 93°C)		
	PTFE Packing : -65°F to 450°F (-53°C to 232°C)		
	PEEK Packing : -65°F to 600°F (-53°C to 315°C)		
Orifice Size	From 0.08" to 0.375" (2mm to 9.5mm)		
Flow Coefficients (Cv)	From 0.09 to 1.80		
End Connection Size	From 1/8" to 3/4" , 3mm to 18mm		
Pressure - Temperature Ratings			
Material Group	2.2	N/A	3.4
Material	316 SS	Brass	Alloy 400
Temperature,°F(°C)	Working Pressure, psig (bar)		
-65 (-53) to 100 (37)	5000 (344)	3000 (206)	3000 (206)
200 (93)	4295 (295)	2350 (161)	2640 (181)
250 (121)	4085 (281)	2200 (151)	2555 (176)
300 (148)	3875 (266)	2050 (141)	2470 (170)
350 (176)	3715 (255)	1470 (101)	2430 (167)
400 (204)	3560 (245)	390 (26)	2390 (164)
450 (232)	3435 (236)	-	2380 (163)
500 (260)	3310 (228)	-	2375 (163)
600 (315)	3130 (215)	-	-

Flow Data at 100°F (37°C)

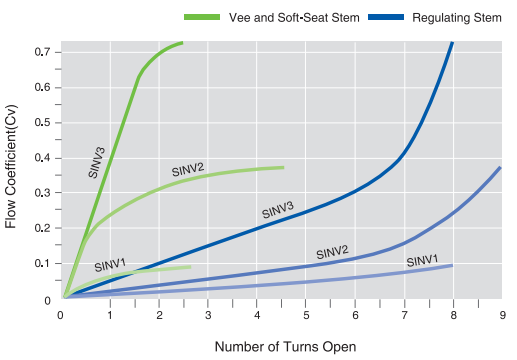

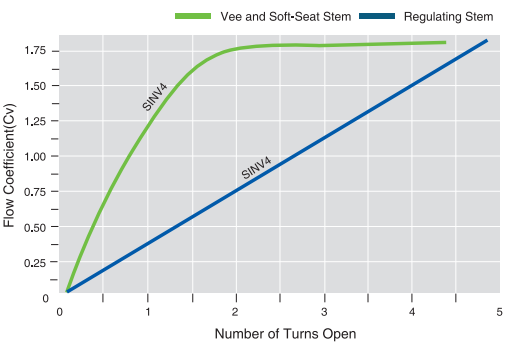

Testing

- Each and every valve is tested with nitrogen at 1000psig (69bar).
- Valve have max allowable leak rate of 0.1cm3/min.
- Shell testing is performed on demand.

Materials of Construction

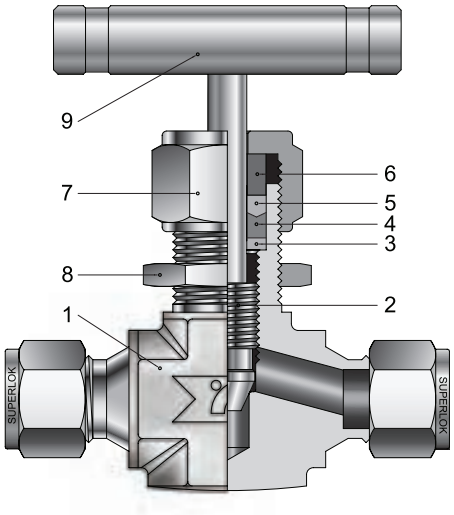

Round knob handle

No.	Component	Material		
		Stainless Steel	Brass	Alloy 400
*1	Body	ASTM A182 F316	ASTM B283	ASTM B564
*2	Vee stem	ASTM A276 Type316	ASTM A276 Type316	ASTM B164
	Regulating stem	ASTM A276 Type316	ASTM A276 Type316	ASTM B164
	Soft seat stem	ASTM A276 Type316 + PCTFE	ASTM A276 Type316 + PCTFE	ASTM A276 Type316 + PCTFE
*3	Packing support	ASTM A276 Type316	ASTM B16	ASTM B164
*4	Lower packing	PTFE	PTFE	PTFE
*5	Upper packing	PTFE	PTFE	PTFE
6	Packing gland	ASTM A276 Type316	ASTM B16	ASTM B164
7	Packing nut	ASTM A276 Type316	ASTM B16	ASTM B164
8	Panel nut	ASTM A276 Type316	ASTM B16	ASTM B164
9	Bar handle	ASTM A276 Type304		
	Round knob handle	Phenolic with brass insert		
	Set screw	Stainless Steel		

Wetted components are marked "*"

Stem Type

Vee Stem(Standard)

Regulating Stem

Soft Seat Stem

Packing

PTFE packing is standard. PEEK packing is optional.

Handle

- 316 stainless steel and alloy 400 body valve - Stainless steel bar handles are standard.
- Brass body and Soft seat stem valve - Black round knob handles are standard.
- Anodized black aluminum bar handles are optional.

SINV Series

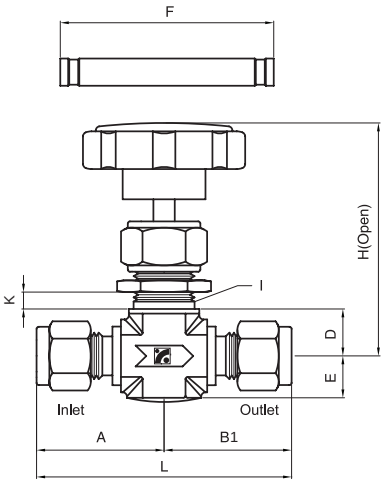

Straight Flow Pattern

SINV A Series

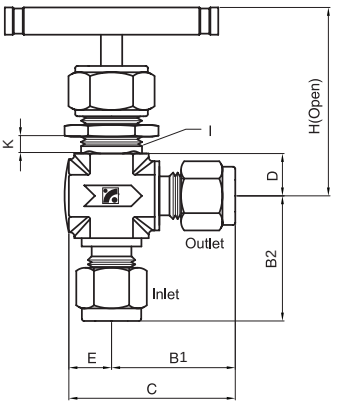

Angle Flow Pattern

I : Panel Hole Drill

K : Panel Mount Thickness
Min 3.17, Max 6.35

Table of dimensions

Part Number		Orifice	Cv	End Connections		Dimensions									
				Inlet	Outlet	L	A	B1	B2	C	D	E	F	I	H
SINV1	S2	2.0	0.09	1/8″ SUPERLOK		49.4	24.7	24.7	24.7	32.6	11.2	7.9	32.0	11.9	55
	S3M			3mm SUPERLOK		49.4	24.7	24.7	24.7	32.6					
	M2N			1/8" Male NPT		38.1	19.1	19.1	19.1	27.0					
	F2N			1/8" Female NPT		47.8	23.9	23.9	23.9	31.8					
	M2N-S2			1/8" Male NPT	1/8" SUPERLOK	43.8	19.1	24.7	19.1	32.6					
SINV2	S4	4.4	0.37	1/4" SUPERLOK		57.4	28.7	28.7	28.7	38.4	11.2	9.7	45.0	13.5	51.5
	S6M			6mm SUPERLOK		57.4	28.7	28.7	28.7	38.4					
	S8M			8mm SUPERLOK		59.4	29.7	29.7	29.7	39.4					
	M2N			1/8" Male NPT		41.2	20.6	20.6	20.6	30.3					
	M4N			1/4" Male NPT		49.8	24.9	24.9	24.9	34.6					
	M4N-S4			1/4" Male NPT	1/4" SUPERLOK	53.6	24.9	28.7	24.9	38.4					
SINV3	S6	6.3	0.73	3/8" SUPERLOK		65.6	32.8	32.8	32.8	45.5	12.7	12.7	64.0	20.0	63.5
	S8			1/2" SUPERLOK		71.2	35.6	35.6	35.6	48.3	14.0				
	S10M			10mm SUPERLOK		66.0	33.0	33.0	33.0	45.7	12.7				
	S12M			12mm SUPERLOK		71.2	35.6	35.6	35.6	48.3	14.0				
	M6N			3/8" Male NPT		57.4	28.7	28.7	28.7	41.4	12.7				
	F4N			1/4" Female NPT		53.8	26.9	26.9	26.9	39.6	12.7				
	M4N-S6			1/4" Male NPT	3/8" SUPERLOK	61.5	28.7	32.8	28.7	45.5	12.7				
	M6N-S6			3/8" Male NPT	3/8" SUPERLOK	61.5	28.7	32.8	28.7	45.5	12.7				
	M6N-S8			3/8" Male NPT	1/2" SUPERLOK	64.3	28.7	35.6	28.7	48.3	14.0				
	M4N-F4N			1/4" Male NPT	1/4" Female NPT	55.6	28.7	26.9	28.7	39.6	12.7				
SINV4	S8	9.5	1.80	1/2" SUPERLOK		96.6	48.3	48.3	48.3	67.4	19.1	19.1	76.0	26.2	99.5
	S12			3/4" SUPERLOK											
	M8N			1/2" Male NPT		76.2	38.1	38.1	38.1	57.2					
	F6N			3/8" Female NPT											
	F8N			1/2" Female NPT											
	M8N-F8N			1/2" Male NPT	1/2" Female NPT										

• All dimensions in millimeters unless specified as “inch”. Dimension are for reference only, subject to change.
• Dimensions based on SUPERLOK nuts finger-tight.

Ordering Information

Example : SINV3 - M6N - S8 - RS - PE - KH - SS

	Inlet		Outlet				
1	2	3	2	3	4	5	6	7

1. Valve Series

Straight Flow Pattern
SINV1 : Orifice 2.0mm
SINV2 : Orifice 4.4mm
SINV3 : Orifice 6.3mm
SINV4 : Orifice 9.5mm

Angle Flow Pattern
SINV1A : Orifice 2.0mm
SINV2A : Orifice 4.4mm
SINV3A : Orifice 6.3mm
SINV4A : Orifice 9.5mm

2. End Connection Type

S : SUPERLOK Tube Fitting
M : Male Pipe Thread
F : Female Pipe Thread

3. End Connection Size

Pipe Thread Designation

Size (inch)	1/8	1/4	3/8	1/2	3/4
Screwed NPT	2N	4N	6N	8N	12N
Screwed BSPT	2R	4R	6R	8R	12R

Tube O.D Designation

Tube O.D (inch)	1/16	1/8	1/4	3/8	1/2	3/4
Designation	1	2	4	6	8	12

Tube O.D (mm)	3	6	8	10	12	16
Designation	3M	6M	8M	10M	12M	16M

4. Stem

Blank : Vee Stem (Standard)
RS : Regulating Stem
SS : Soft Seat Stem

5. Packing

Blank : PTFE Packing (Standard)
PE : PEEK Packing

6. Handle

Blank : Stainless Steel Bar Handle (Standard)
KH : Black Round Knob Handle
AH : Anodized Black Aluminum Bar Handle

7. Body Material

SS (Blank) : 316 Stainless Steel
B : Brass
M40 : Alloy 400 (Monel)

Examples

ex1) SINV2 - S4 - SS
Straight flow pattern, Orifice 4.4mm/ Inlet: SUPERLOK 1/4" / Outlet: SUPERLOK 1/4" / Vee stem / PTFE Packing
Stainless steel bar handle / 316 Stainless steel body
ex2) SINV3A - M4N - S6 - RS - PE - KH - SS
Angle flow pattern, Orifice 6.3mm/ Inlet: 1/4"NPT Male / Outlet: SUPERLOK 3/8" / Regulating stem / PEEK Packing
Black round knob handle / 316 Stainless steel body
ex3) SINV4 - M8N - F8N - KH - B
Straight flow pattern, Orifice 9.5mm/ Inlet: 1/2"NPT Male / Outlet: 1/2"NPT Female / Vee stem
PTFE Packing / Black round knob handle / brass body

Union Bonnet Needle Valves

SUNV Series

Features

- Compact design
- Low operating torques
- Panel mountable
- Straight and angle flow patterns
- Non rotating vee stem tip
- Three stem type are available

Specifications

Temperature Ratings	PCTFE Stem Tip : -65°F to 200°F (-53°C to 93°C)				
	PTFE Packing : -65°F to 450°F (-53°C to 232°C)				
	PEEK Packing : -65°F to 600°F (-53°C to 315°C)				
	Graphite Packing : -65°F to 1200°F (-53°C to 648°C)				
Orifice Size	From 0.156" to 0.437" (4mm to 11mm)				
Flow Coefficients (Cv)	From 0.35 to 2.2				
End Connection Size	From 1/4" to 1" , 6mm to 25mm				
Pressure - Temperature Ratings					
Material Group	2.2	3.4	3.1	3.5	3.8
Material	316 SS	Alloy 400	Alloy 20	Alloy 600	Alloy C-276
Temperature,°F(°C)	Working Pressure, psig (bar)				
-20 (-28) to 100 (37)	6000 (413)	5000 (344)	5000 (344)	6000 (413)	6000 (413)
200 (93)	5160 (355)	4400 (303)	4640 (319)	5600 (385)	6000 (413)
250 (121)	4910 (338)	4260 (293)	4500 (310)	5460 (376)	6000 (413)
300 (148)	4660 (321)	4120 (283)	4360 (300)	5320 (366)	6000 (413)
350 (176)	4470 (307)	4050 (279)	4185 (288)	5220 (359)	5975 (411)
400 (204)	4280 (294)	3980 (274)	4010 (276)	5120 (352)	5880 (405)
450 (232)	4130 (284)	3970 (273)	3955 (272)	5030 (346)	5710 (393)
500 (260)	3980 (274)	3960 (272)	3900 (268)	4940 (340)	5540 (381)
600 (315)	3760 (259)	-	3790 (261)	4780 (329)	5040 (347)
650 (343)	3700 (254)	-	3750 (258)	4700 (323)	4905 (337)
700 (371)	3600 (248)	-	3710 (255)	4640 (319)	4730 (325)
750 (398)	3520 (242)	-	3665 (252)	4430 (305)	4430 (305)
800 (426)	3460 (238)	-	3600 (248)	4230 (291)	4230 (291)
850 (454)	3380 (232)	-	-	4060 (279)	4060 (279)
900 (482)	3280 (225)	-	-	3745 (258)	3745 (258)
950 (510)	3220 (221)	-	-	2725 (187)	3220 (221)
1000 (537)	3030 (208)	-	-	1800 (124)	3030 (208)
1050 (565)	3000 (206)	-	-	1155 (79.5)	3000 (206)
1100 (593)	2685 (184)	-	-	770 (53.0)	2685 (184)
1150 (621)	2285 (157)	-	-	565 (38.9)	2285 (157)
1200 (648)	1715 (118)	-	-	515 (35.4)	1715 (118)

Flow Data at 100°F (37°C)

Regulating Stem Tip

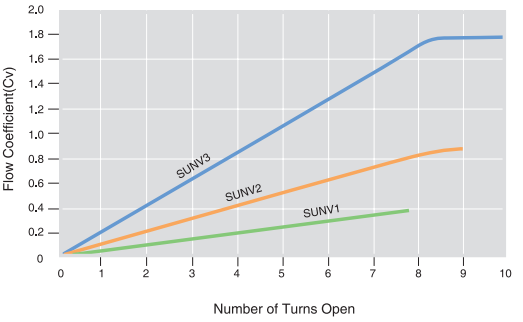

Vee and Soft Seat Stem Tip

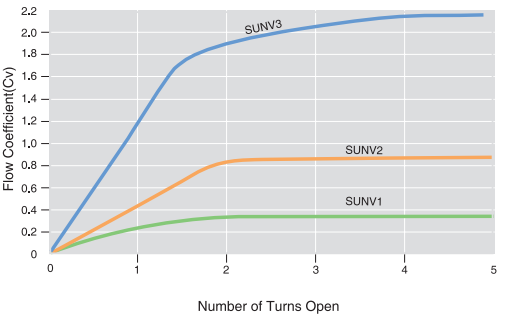

Testing

- Each and every Valve is tested with nitrogen at 1000psig (69bar).
- Valve have max allowable leak rate of 0.1 cm^3/min.
- Shell testing is performed on demand.

Materials of Construction

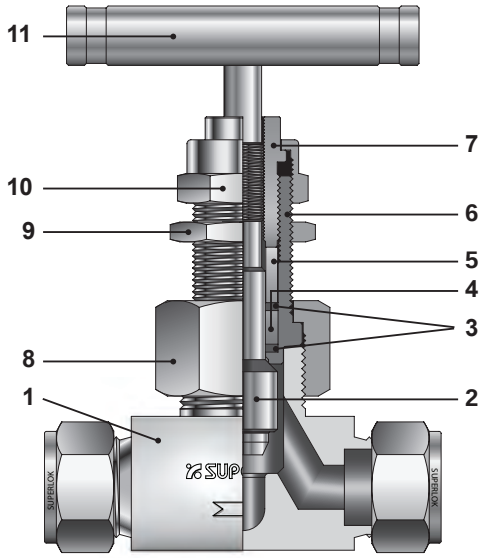

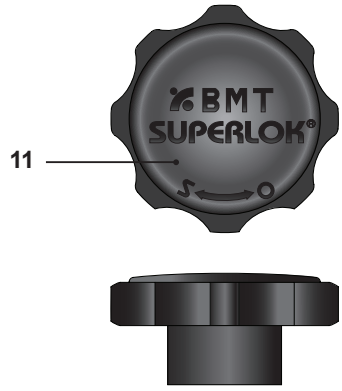

Round knob handle

No.	Component	Material		
		Stainless Steel	Alloy 400	Alloy C-276
*1	Body	ASTM A479 Type316	ASTM B164	ASTM B574
*2	Non rotating vee stem	ASTM A276 Type316	ASTM B164	ASTM B574
	Regulating stem	ASTM A276 Type316	ASTM B164	ASTM B574
	Soft seat stem	ASTM A276 Type316 + PCTFE	ASTM B164 + PCTFE	ASTM B574 + PCTFE
*3	Packing support	Glass filled PTFE	Glass filled PTFE	Glass filled PTFE
*4	Packing	PTFE	PTFE	PTFE
5	Packing gland	ASTM A276 Type316	ASTM B164	ASTM B574
*6	Bonnet	ASTM A276 Type316	ASTM B164	ASTM B574
7	Packing bolt	ASTM A276 Type316	ASTM A276 Type316	ASTM A276 Type316
8	Union nut	ASTM A276 Type316	ASTM A276 Type316	ASTM A276 Type316
9	Panel nut	ASTM A276 Type316	ASTM A276 Type316	ASTM A276 Type316
10	Packing nut	ASTM A276 Type316	ASTM A276 Type316	ASTM A276 Type316
11	Bar handle	Stainless Steel		
	Round knob handle	Phenolic with brass insert		
	Set screw	Stainless Steel		

Wetted components are marked " * ".

Stem Type

Non Rotating Vee Stem

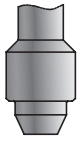

Regulating Stem

Soft Seat Stem

Packing

PTFE packing is standard. PEEK and Graphite packing is optional.

Handle

- 316 stainless steel, alloy 400 and alloy C-276 body valve - Stainless steel bar handles are standard.
- Black round knob handles are optional. (SUNV1 and SUNV2 Series)
- Anodized black aluminum bar handles are optional.

SUNV Series

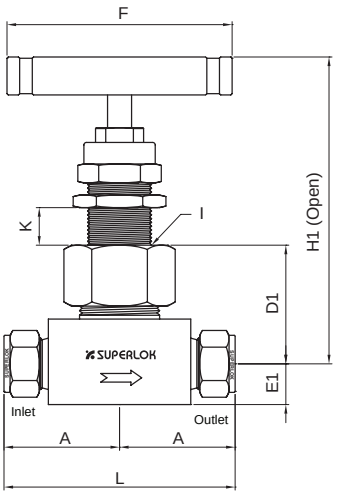

Straight Flow Pattern

SUNV A Series

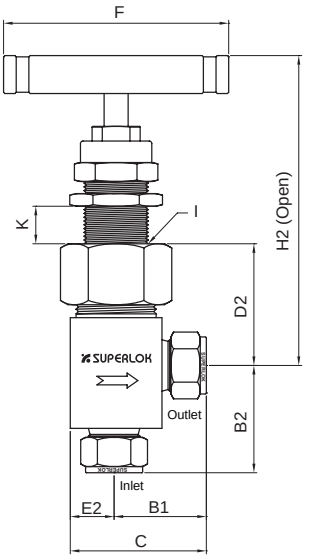

Angle Flow Pattern

- **I** : Panel Hole Drill
- **J** : Socket weld end connection depth
- **K** : Panel Mount Thickness
  1/16" (1.6) min, 3/8" (9.5) max

Table of Dimensions

Part Number		Orifice	Cv	End Connections		Dimensions													
				Inlet	Outlet	L	A	B1	B2	C	D1	D2	E1	E2	F	I	H1	H2	J
SUNV1	S4	4.0	0.35	1/4" SUPERLOK		62.0	31.0	29.4	37.3	38.9	27.8	27.8	9.9	9.9	45.0	15.1	77.8	77.8	-
	S6M			6mm SUPERLOK		62.0	31.0	29.4	37.3	38.9		27.8						77.8	
	S8M			8mm SUPERLOK		62.0	31.0	29.4	37.3	38.9		27.8						77.8	
	M4N			1/4" Male NPT		50.8	25.4	25.4	25.4	35.0		32.6						82.6	
	F2N			1/8" Female NPT		50.8	25.4	23.0	25.4	32.6		32.6						82.6	
	F4N			1/4" Female NPT		52.4	26.2	23.0	25.4	32.6		32.6						82.6	
	M4N-F4N			1/4" Male NPT	1/4" Female NPT	52.4	26.2	23.0	25.4	32.6		32.6						82.6	
	SW4T			1/4" Tube Socket Weld		46.0	23.0	22.3	30.2	31.8		27.8						77.8	7.2
SUNV2	S6	6.0	0.86	3/8" SUPERLOK		73.0	36.5	32.5	42.9	45.3	34.1	31.0	12.7	12.7	64.0	19.9	93.7	90.5	-
	S8			1/2" SUPERLOK		77.8	38.9	34.9	42.1	47.6		34.2						93.7	
	S10M			10mm SUPERLOK		73.0	36.5	33.3	39.7	46.1		34.2						93.7	
	S12M			12mm SUPERLOK		77.8	38.9	35.7	42.1	48.4		34.2						93.7	
	F4N			1/4" Female NPT		57.2	28.6	25.4	28.6	38.1		37.3						96.9	
	F6N			3/8" Female NPT		57.2	28.6	25.4	25.4	38.1		37.3						96.9	
	SW6T			3/8" Tube Socket Weld		57.2	28.6	25.4	28.6	38.1		37.3						93.7	8.0
	SW8T			1/2" Tube Socket Weld		57.2	28.6	25.4	25.4	38.1		35.7						95.3	9.6
	SW4P			1/4" Pipe Socket Weld		57.2	28.6	25.4	28.6	38.1		37.3						96.9	9.6
SUNV3	S8	11.0	2.2	1/2" SUPERLOK		100.0	50.0	43.7	53.2	61.1	46.0	47.6	15.9	17.5	89.0	26.2	121.5	123.1	-
	S12			3/4" SUPERLOK		100.0	50.0	43.7	53.2	61.1	46.0	47.6	15.9	17.5			121.5	123.1	
	S16			1" SUPERLOK		100.0	50.0	-	-	-	47.6	-	17.5	-			123.1	-	
	S12M			12mm SUPERLOK		100.0	50.0	-	-	-	46.0	-	15.9	-			121.5	-	
	F8N			1/2" Female NPT		79.4	39.7	33.3	39.7	50.8	46.1	50.8	15.9	17.5			121.5	126.2	
	F12N			3/4" Female NPT		82.6	41.3	-	-	-	48.4	-	19.9	-			123.9	-	
	F16N			1" Female NPT		92.1	46.0	-	-	-	54.0	-	25.4	-			129.4	-	
	M8N-F8N			1/2" Male NPT	1/2" Female NPT	79.4	39.7	33.3	39.7	50.8	46.0	50.8	15.9	17.5			121.5	126.2	
	M12N-F12N			3/4" Male NPT	3/4" Female NPT	82.6	41.3	-	-	-	48.4	-	19.9	-			123.9	-	
	M16N-F16N			1" Male NPT	1" Female NPT	92.1	46.0	-	-	-	54.0	-	25.4	-			129.4	-	
	SW8T			1/2" Tube Socket Weld		79.4	39.7	33.3	42.9	50.8	46.0	47.6	15.9	17.5			121.5	123.1	9.6
	SW12T			3/4" Tube Socket Weld		79.4	39.7	-	-	-	46.0	-	15.9	-			121.5	-	11.1
	SW8P			1/2" Pipe Socket Weld		79.4	39.7	33.3	39.7	50.8	47.6	50.8	17.5	17.5			123.1	123.1	9.6

• All dimensions in millimeters unless specified as "inch". Dimension are for reference only, subject to change.
• Dimensions based on SUPERLOK nuts finger-tight.
• ISO Tapered Threads are available upon request.

Ordering Information

Example : SUNV1 - M4N - S4 - RS - GR - KH - SS

	1	Inlet 2	Inlet 3	Outlet 2	Outlet 3	4	5	6	7
	SUNV1	M4	N	S4		RS	GR	KH	SS

1. Valve Series

Straight Flow Pattern

SUNV1: Orifice 4.0mm
SUNV2: Orifice 6.4mm
SUNV3: Orifice 11.0mm

Angle Flow Pattern

SUNV1A: Orifice 4.0mm
SUNV2A: Orifice 6.4mm
SUNV3A: Orifice 11.0mm

2. End Connection Type

S : SUPERLOK Tube Fitting
M : Male Pipe Thread
F : Female Pipe Thread
SW : Socket Weld

3. End connection Size

Pipe Thread Designation

Size (inch)	1/8	1/4	3/8	1/2	3/4	1
Screwed NPT	2N	4N	6N	8N	12N	16N
Screwed BSPT	2R	4R	6R	8R	12R	16R

Tube O.D Designation

Tube O.D (inch)	1/4	3/8	1/2	3/4	1
Designation	4	6	8	12	16

Tube O.D (mm)	6	8	10	12	16	20	25
Designation	6M	8M	10M	12M	16M	20M	25M

4. Stem

Blank : Non Rotating Vee Stem (Standard)
RS : Regulating Stem
SS : Soft Seat Stem

5. Packing

Blank : PTFE Packing (Standard)
PE : PEEK Packing
GR : Graphite Packing

6. Handle

Blank : Stainless Steel Bar Handle (Standard)
KH : Black Round Knob Handle
AH : Anodized Black Aluminum Bar Handle

7. Body Material

SS : 316 Stainless Steel
M40 : Alloy 400 (Monel)
276 : Alloy C-276 (Hastelloy)

Examples

ex1) SUNV1 - S4 - 276
Straight flow pattern, Orifice 4.0mm/ Inlet: SUPERLOK 1/4" / Outlet: SUPERLOK 1/4" / Non rotating vee stem / PTFE Packing
Stainless steel bar handle / Hastelloy body

ex2) SUNV2A - SW8T - RS - GR - SS
Angle flow pattern, Orifice 6.4mm/ Inlet: 1/2"Socket weld / Outlet: 1/2" Socket weld / Regulating stem / Graphite Packing
Stainless steel bar handle / 316 Stainless steel body

ex3) SINV3 - M12N - F8N - SS
- Straight flow pattern, Orifice 11.0mm/ Inlet: 3/4"NPT Male / Outlet: 1/2"NPT Female / Non rotating vee stem / PTFE Packing
Stainless steel bar handle / 316 Stainless steel body

Integral Bonnet Bar Stock Needle Valves

SBNV Series

Features

- Integral bonnet design
- Bar stock body
- Compact design
- Low operating torques
- Variety of End Connections
- Straight and Angle flow patterns
- Each and every valve is tested at the factory

Specifications

Pressure rating	6000psig (413bar)@100°F (38°C)
Temperature rating	-65 to 450°F (-54 to 232°C) with PTFE packing and up to 600°F (315°C) with PEEK packing
Body material	316 stainless steel and Alloy400
Orifice	0.17″ and 0.25″ (4.3mm and 6.4mm)

Testing

- Each Valve is tested with nitrogen at 1000psig (69bar) to maximum allowable leak rate of 0.1 SCCM.
- Hydrostatic shell test is performed at 1.5 times of the working pressure. (OPTION)

Materials of Construction

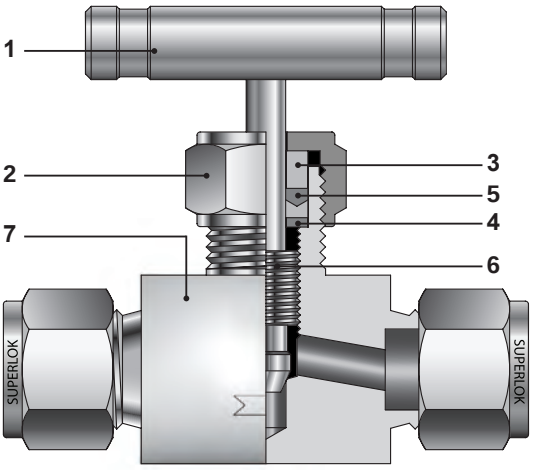

No.	Component	Material Grade / ASTM Specification	
		Stainless Steel	Alloy 400
1	Bar Handle	Stainless Steel	
	Knob Handle	Phenolic with brass insert	
	Set Screw	Stainless Steel	
2	Packing Nut	SS316 / A276	Alloy R-405/B164
3	Packing Gland		
*4	Packing Support		
*5	Packing	PTFE (Standard), PEEK (Optional)	
*6	Vee Stem	SS316 / A276	Alloy R-405/B164
	Soft Seat Stem	SS316 / A276 with PCTFE	ALLOY R-405/B164 with PCTFE
*7	Body	SS316 / A276	ALLOY R-405/B164

* Wetted components are marked "*"

SBNV Series

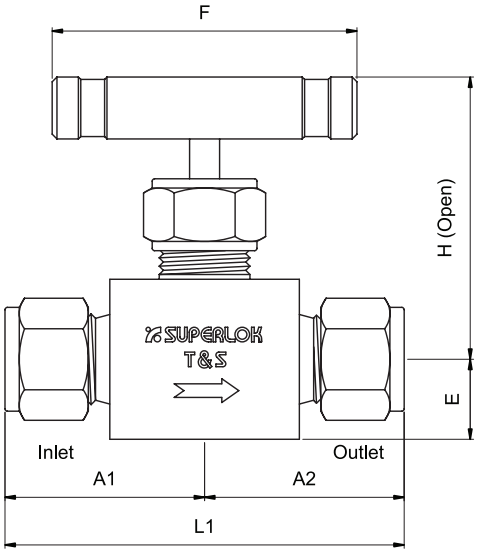

Straight Flow Pattern

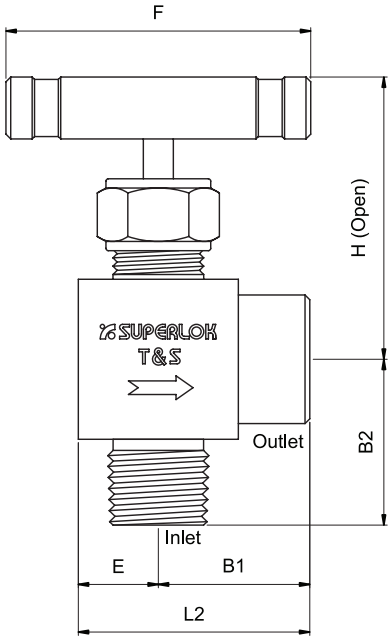

Angle Flow Pattern

Table of dimensions

Part Number		Orifice	Cv	End Connections		Dimensions								
				Inlet	Outlet	L1	A1	A2	L2	B1	B2	E	F	H
SBNV1	F4N	4.3	0.37	1/4″ FEMALE NPT		47.6	23.8	23.8	36.5	25.4	25.4	11.1	45.0	51.0
	M4N			1/4″ MALE NPT		49.2	24.6	24.6	-	-	-	-		
	M4N-F4N			1/4″ MALE NPT	1/4″ FEMALE NPT	48.4		23.8	36.5	25.4	26.2	11.1		
	M4N-S4			1/4″ MALE NPT	1/4″ SUPERLOK	53.3		28.7	39.8	28.7				
	S4			1/4″ SUPERLOK		62.4	31.2	31.2			29.7			
SBNV2	F6N	6.4	0.73	3/8″ FEMALE NPT		64.0	32.0	32.0	48.6	31.8	31.8	16.8	64.0	63.0
	F8N			1/2″ FEMALE NPT							35.8			
	M6N-F6N			3/8″ MALE NPT	3/8″ FEMALE NPT						31.0			
	M8N-F8N			1/2″ MALE NPT	1/2″ FEMALE NPT	64.5	32.5				35.8			
	M12N-F8N			3/4″ MALE NPT	1/2″ FEMALE NPT	63.8	31.8		-	-	-	-		
	M6N-S8			3/8″ MALE NPT	1/2″ SUPERLOK	73.7		41.9						
	S6			3/8″ SUPERLOK		78.2	39.1	39.1						
	S8			1/2″ SUPERLOK		83.8	41.9	41.9						

• All dimensions in millimeters unless specified as “inch”. Dimension are for reference only, subject to change.
• Dimension shown with SUPERLOK nuts measure in the finger-tight, where applicable.
• ISO Tapered Threads are available upon request.

Technical Data

Pressure - Temperature Rating

Body Material	Stem	Temperature Rating	Pressure Rating@ -65°F~100°F (-54°C~38°C)
SS316	Vee	-65°F~450°F (-54°C~232°C)	6000psig (413 bar)
	Soft Seat	-65°F~200°F (-54°C~93°C)	
Alloy 400	Vee	-65°F~450°F (-54°C~232°C)	5000psig (345 bar)
	Soft Seat	-65°F~200°F (-54°C~93°C)	

*The above ratings are for a standard valve with PTFE packing.
*Extreme temperature fluctuations may require packing adjustment.

Working Pressure - Temperature

Temperature Rating		Pressure psig(bar) @ Temperature Rating	
		SS316	Alloy 400
-65°F (-54°C) to	100°F (38°C)	6000psig (413bar)	5000psig (435 bar)
	200°F (93°C)	5160psig (355bar)	4400psig (303 bar)
	300°F (148°C)	4660psig (321bar)	4120psig (284 bar)
	350°F (176°C)	4470psig (308bar)	4050psig (279 bar)
	400°F (204°C)	4280psig (295bar)	3980psig (274bar)
	450°F (232°C)	4130psig (284bar)	3970psig (273 bar)

Packing and Body material - Temperature and Pressure Rating

Packing Material	Body Material	Temperature Rating	Pressure Rating@ Max. Temperature
PTFE (Standard)	SS316	-65°F~450°F (-54°C~232°C)	4130psig (284 bar)
	Alloy 400		3970psig (273 bar)
PEEK	SS316	-65°F~600°F (-54°C~315°C)	3760psig (259bar)
	Alloy 400	-65°F~500°F (-54°C~260°C)	3960psig (272bar)

* Alloy 400 not applicable over 500 °F(260 °C)
* PEEK is not recommended for service with aromatic heat transfer or concentrated sulfuric and nitric acids. Other limitations may apply.

Flow Data at 100°F (37°C)

Flow Coefficient at Turns Open

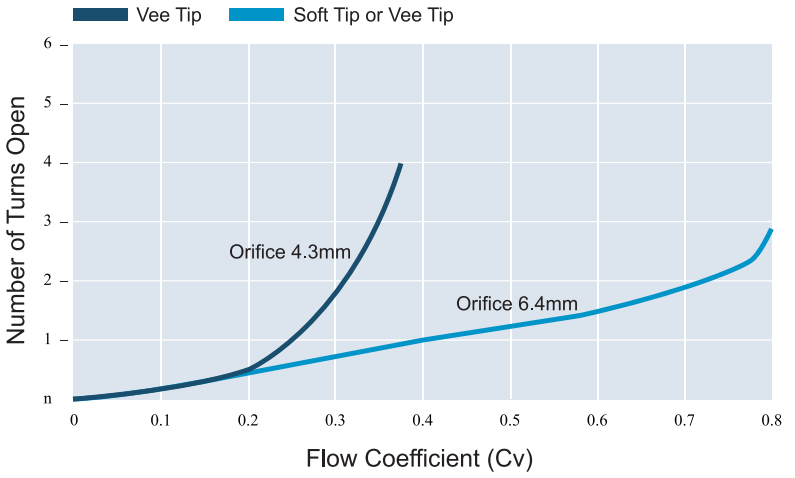

Handle

- 316 Stainless steel bar handles are standard.
- Black phenolic knob is standard for soft seat stem Valves.
- Anodized black aluminum bar handles

Available Stem Type

Two stem types

- Vee stem : All metal, Vee stem tip (Standard)
- Soft Seat Stem: PCTFE stem tip (Optional)

Ordering Information

Example : SBNV2 - M6N - S8 - SS - PE - KH - M40

		Inlet		Outlet						
	SBNV2	M	6N	S	8	SS	PE	KH	M40
	1	2	3	2	3	4	5	6	7

1. Valve Series

Straight Flow Pattern

SBNV1 : 4.3mm Orifice

SBNV2 : 6.4mm Orifice

Angle Flow Pattern

SBNV1A : 4.3mm Orifice

SBNV2A : 6.4mm Orifice

2. Port Type

S : SUPERLOK Tube Fitting

M : Male Pipe Thread

F : Female Pipe Thread

3. Port Size

Pipe Thread Designation

Size (inch)	1/8	1/4	3/8	1/2	3/4	1
Screwed BSPT	2R	4R	6R	8R	12R	16R
Screwed NPT	2N	4N	6N	8N	12N	16N

Tube O.D Designation

Tube O.D (inch)	1/4	3/8	1/2	3/4	1
Designation	4	6	8	12	16
Tube O.D (mm)	6	10	12	20	25
Designation	6M	10M	12M	20M	25M

4. Stem Type

Nil : Vee Stem (Standard)

SS : Soft Seat Stem

5. Packing Material

Nil : PTFE (Standard)

PE : PEEK

6. Handle

- Nil : Stainless Steel Bar Handle (Standard)
- KH : Black Phenolic Knob Handle
- AH : Anodized black aluminum bar handle

7. Body Material

SS : 316 Stainless Steel

M40 : Alloy 400 (Monel)

Examples

ex1) SBNV1 - S4 - SS

SBNV1 Series / [Inlet]SUPERLOK x [Outlet]SUPERLOK / Port Size: 1/4" x 1/4" / SS316 Bar Handle

Straight Pattern / PTFE packing / Vee Stem / 316 Stainless Steel Body

ex2) SBNV2 - F8N - SS - KH - M40

SBNV2 Series / [Inlet]Female Pipe Thread x [Outlet]Female Pipe Thread / Port Size: 1/2"NPT x 1/2"NPT / Black phenolic knob handle

Straight Pattern / PTFE packing / Soft Seat Stem / Alloy 400 Body

ex3) SBNVA2 - M8N - F8N - PE

SBNV2 Series / [Inlet]Male Pipe Thread x [Outlet]Female Pipe Thread / Port Size: 1/2"NPT x 1/2"NPT / SS316 Bar Handle

Angle Pattern / PEEK packing / Vee Stem / 316 Stainless Steel Body

High Pressure Bar Stock Needle Valves

SHBNV Series

Features

- Bar stock body
- Compact design
- Low operating torques
- Variety of End Connections
- Straight and Angle flow patterns
- Each and every valve is tested at the factory

Specifications

Maximum Working Pressure rating	10000psig (689bar) @100°F(38°C)
Temperature rating	-65 to 450°F (-54 to 232 °C) with PTFE packing
Body material	316 stainless steel, Carbon steel
Orifice	0.197" (5.0mm)

Testing

- Each Valve is tested with nitrogen at 1000psig(69bar) to maximum allowable leak rate of 0.1 SCCM.
- Hydrostatic shell test is porformed at 1.5 times of the working pressure. (OPTION)

Technical Data

Body Material	Stainless Steel	Carbon Steel
Temperature Rating	-65 °F ~ 450 °F (-54 °C ~ 232 °C)	-20 °F ~ 350 °F (-29 °C ~ 176 °C)
Pressure Rating @ 100 °F	10000 psig (689bar)	10000 psig (689bar)
Pressure Rating @ Max Temperature	4000 psig @ 500 °F 276 bar @ 260 °C	5230 psig @ 350 °F 360 bar @ 176 °C

Pressure vs temperature

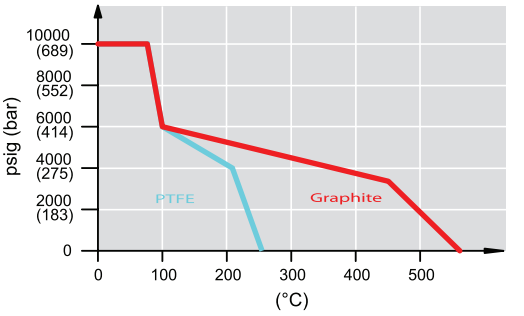

Materials of Construction

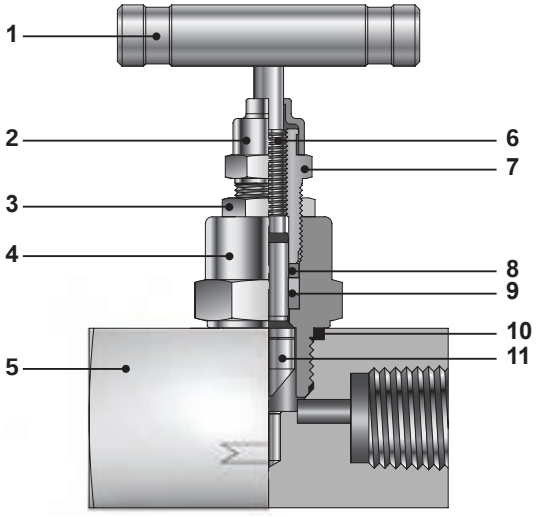

No.	Component	Material Grade / ASTM Specification	
		Stainless Steel	Carbon Steel
1	Bar Handle	Stainless Steel	
2	Dust Cap	Nylon	
3	Lock Nut	Stainless Steel	
4	Bonnet	SS316 / A479	A105
5	Body	SS316 / A479	A105
6	Stem	SS316 / A479	
7	Packing Bolt	SS316 / A276	
8	Packing Gland	SS316 / A276	
9	Packing	PTFE, Graphite	
10	Bonnet Seal	PTFE, Graphite	
11	Vee Tip	SS630 / A564	

SHBNV Series

Straight Pattern

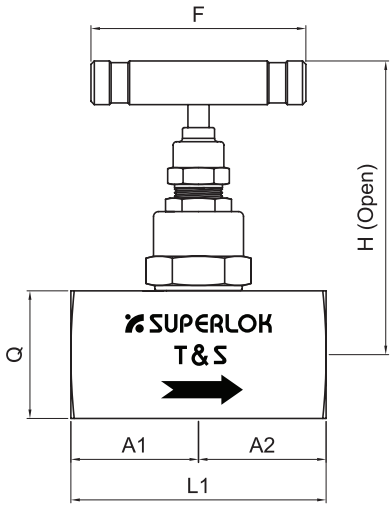

Angle Pattern

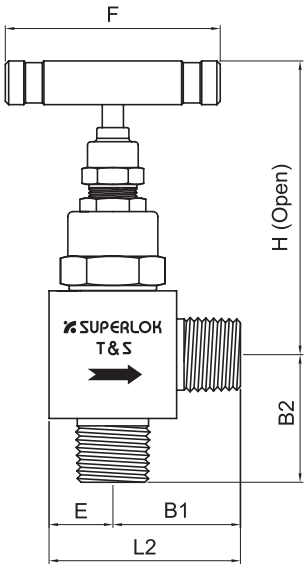

Table of Dimensions

Part Number		Orifice	Cv	End Connections		Dimensions									
				Inlet	Outlet	L1	A1	A2	Q	L2	B1	B2	E	F	H
SHBNV	F4N	4.0	0.52	1/4 Female NPT		60.4	30.2	30.2	32.0	51.0	35.0	35.0	16.0	64.0	85.5
	M4N-F4N			1/4 Male NPT	1/4 Female NPT	62.0	31.8								
	F6N			3/8 Female NPT		68.0	34.0	34.0							
	M6N-F6N			3/8 Male NPT	3/8 Female NPT	70.0	36.0								
	F8N			1/2 Female NPT		70.0	35.0	35.0							
	M8N-F8N			1/2 Male NPT	1/2 Female NPT	79.0	44.0								

• All dimensions in millimeters unless specified as “inch”. Dimension are for reference only, subject to change.

Ordering Information

Example : SHBNV - M 8N - F 8N - AH - GR - SS

(1) SHBNV (2) M (3) 8N (Inlet) (2) F (3) 8N (Outlet) (4) AH (5) GR (6) SS

1. Valve Series
SHBNV : Straight Flow Pattern
SHBNVA : Angle Flow Pattern

2. (Inlet x Outlet)
M : Male Pipe Thread
F : Female Pipe Thread

3. Port Size
Pipe Thread Designation

Size (inch)	1/4	3/8	1/2
Screwed BSPT	4R	6R	8R
Screwed NPT	4N	6N	8N

4. Handle
Nil : Stainless Steel Bar Handle (Standard)
AH : Anodized black aluminum bar handle

5. Packing Material
Nil : PTFE (Standard)
GR : Grafoil

6. Body Material
SS : 316 Stainless Steel
C : Carbon Steel

Instrumentation Manifold Valves

SM2V / SM3V / SM5V Series

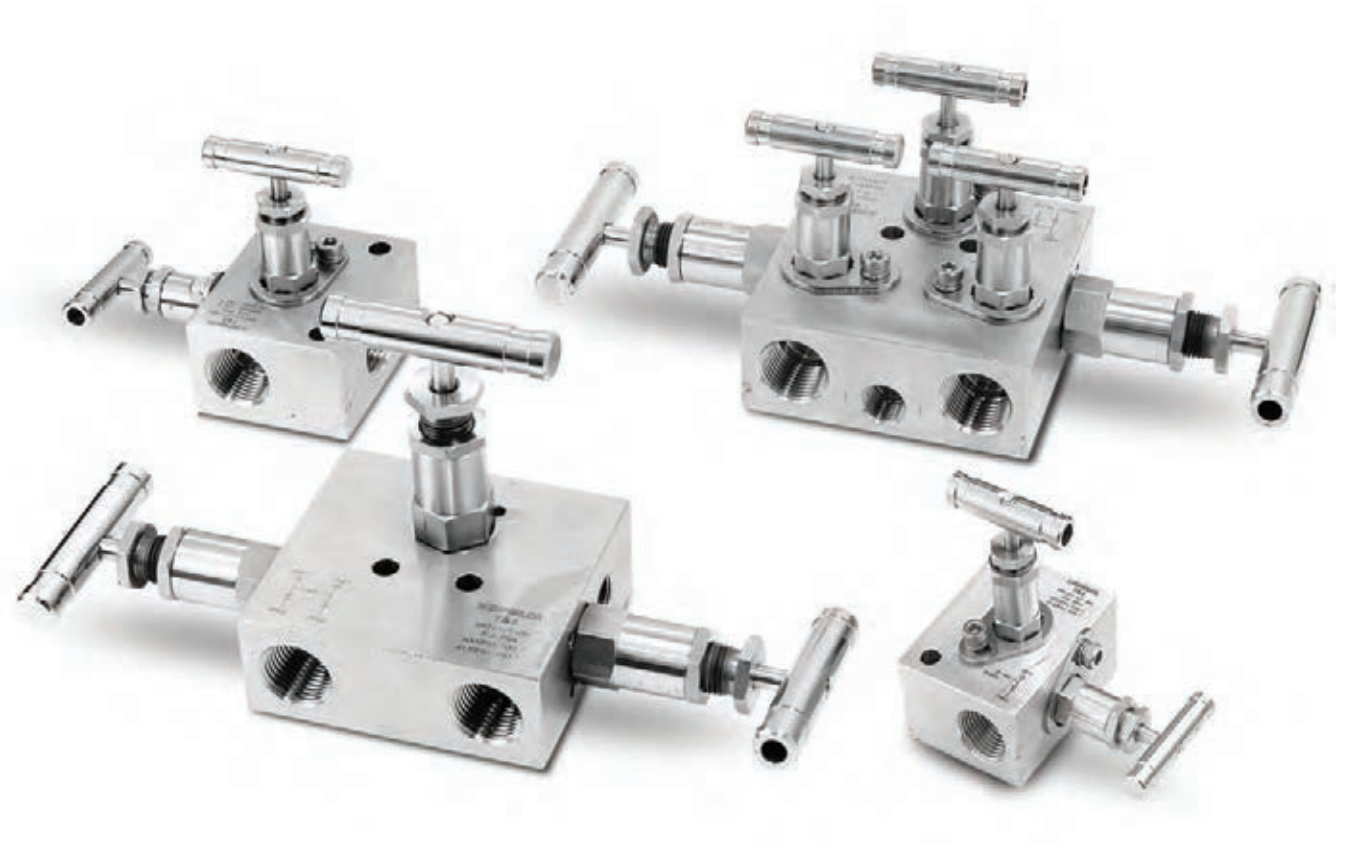

Ordering Information

Example : **SM2 V - F 8N - M40**

1	2	3	4	5
SM2	V	F	8N	M40

1. Valve Series

SM2 : 2-Valve Manifolds
SM3 : 3-Valve Manifolds
SM5 : 5-Valve Manifolds

2. Mounting Type

V : Horizontal Style (Remote Mounting)
VF : Horizontal Single Flange Style (Direct Mounting)
VDF : Horizontal Dual Flange Style (Direct Mounting)
VD : Vertical Style (Direct Mounting)

3. End Connection Type

S : Superlok Female Tube Fitting
F : Female Pipe Thread

4. End Connection Size

Tube O.D Designation

Size (inch)	1/2
Designation	8

Pipe Thread Designation

Size (inch)	1/2
Screwed NPT	8N

5. Body Material

SS : 316 Stainless Steel
M40 : Alloy 400 (Monel)

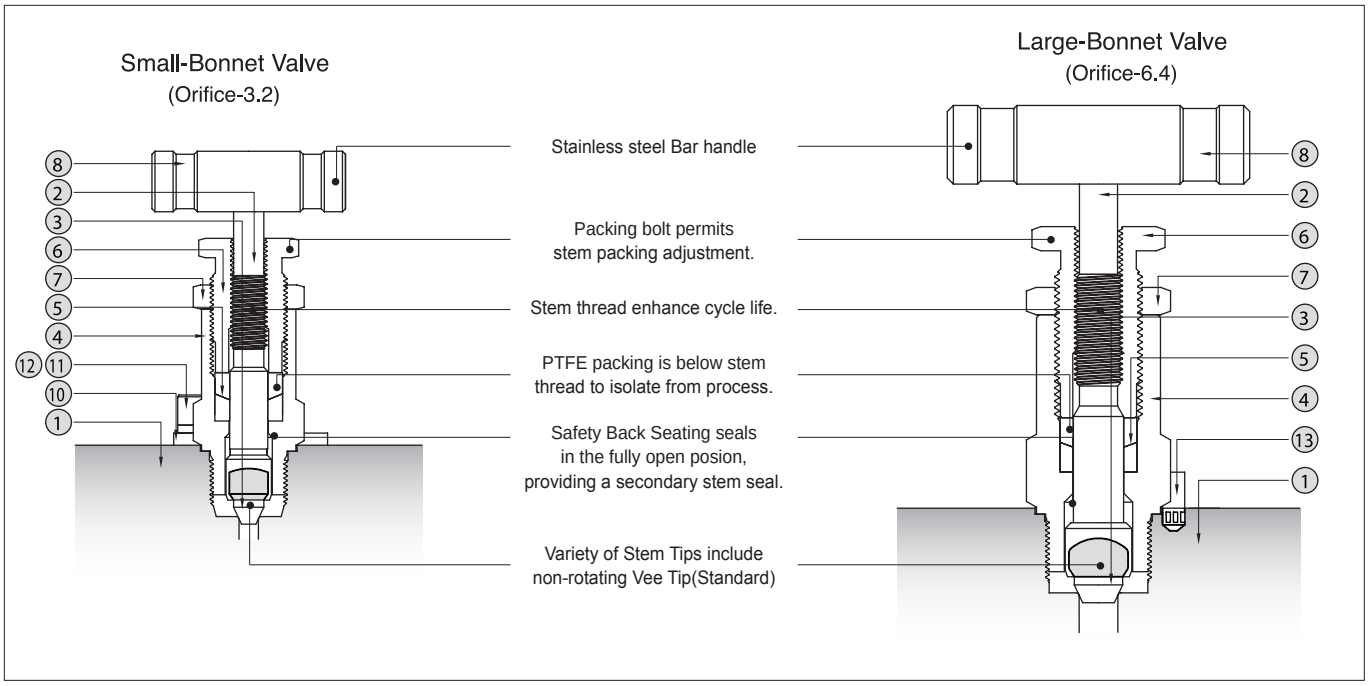

Technical Data

Material of Construction

Component		Material Grade
1	Body	SS316 / A276 or A479
2	Stem	SS316 / A276 or A479
3	Vee Tip	SS316 / A479
4	Bonnet	SS316 / A276 / or A479
5	Packing	PTFE
		Grafoil (optional)
6	Packing Bolt	SS316 / A276 / or A479
7	Lock Nut	SS316 / A276 / or A479
8	Handle	Stainless Steel
9	Set Screw	Stainless Steel
10	Locking Plate	Stainless Steel
11	Wrench Bolt	Stainless Steel
12	Spring Washer	Stainless Steel
13	Stop Pin	Stainless Steel

Orifice

3.2mm (0.125 in.)	2-Valve Manifolds Block, Bleed Valve 5-Valve Manifolds Equalizer, Bleed Valve
6.4mm (0.250 in.)	3-Valve Manifolds Block, Equalizer Valve 5-Valve Manifolds Block Valve

Features

- 2-,3-,and 5-valves Instrument manifolds valves.
- Pressure Rating up to 6000psig (413bar) @ 100℉(37℃)
- Temperature up to 1200℉(648℃) with optional Grafoil packing
- All 316 stainless steel construction with PTFE packing

Testing

Each valve on every manifold is factory tested with nitrogen gas.
The test is performed to a maximum allowable leak rate of 0.1scc/min.

Pressure-Temperature Rating

Component	SS 316	
Packing Material	PTFE	Grafoil
Temperature(℃)	Working Pressure psig(bar)	
-65 (-53) to 100(37)	6000 (413)	6000 (413)
200 (93)	5160 (355)	5160 (355)
250 (121)	4910 (338)	4910 (338)
300 (148)	4660 (321)	4660 (321)
350 (176)	4470 (307)	4470 (307)
400 (204)	4280 (294)	4280 (294)
450 (232)	4130 (284)	4130 (284)
500 (260)	-	3980 (274)
550 (287)	-	3870 (266)
600 (315)	-	3760 (259)
650 (343)	-	3700 (254)
700 (371)	-	3600 (248)
750 (398)	-	3520 (242)
800 (426)	-	3460 (235)
850 (454)	-	3380 (232)
900 (482)	-	3280 (225)
950 (510)	-	3220 (221)
1000 (537)	-	3030 (208)
1050 (565)	-	3000 (206)
1100 (593)	-	2685 (184)
1150 (621)	-	2285 (157)
1200 (648)	-	1715 (118)

* Note
450℉(232℃) with standard PTFE packing.
1200℉(648℃) with Optional Grafoil packing.

2-Valve Manifolds

Horizontal Style(Remote Mounting)

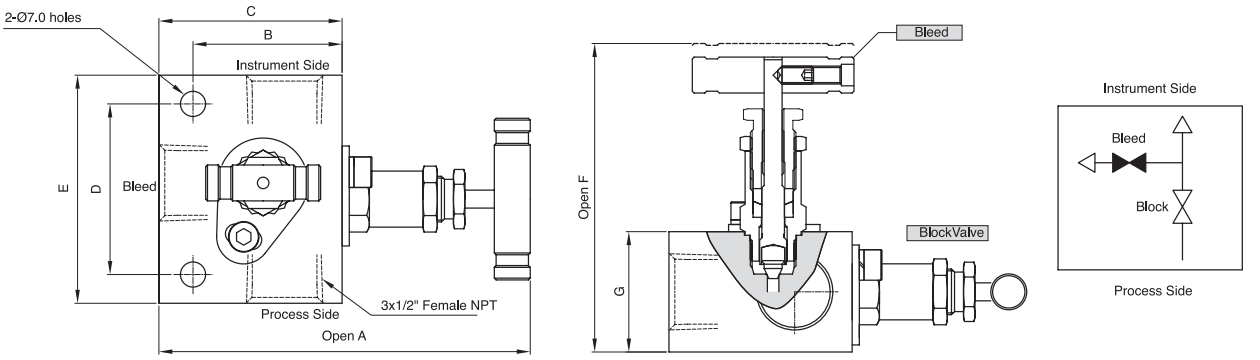

Part Number	End Connections			Weight Dimensions						
	Process	Instrument	Bleed	A	B	C	D	E	F	G
SM2V-F8N	1/2" Female NPT			103.5	41.5	51	47.5	63.5	85.9	33.5

Horizontal Single Flange Style (Direct Mounting)

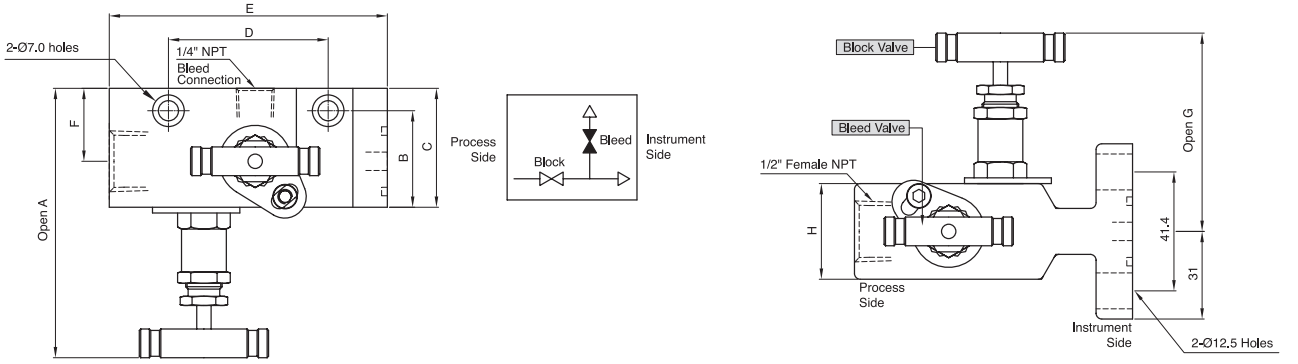

Part Number	End Connections			Weight Dimensions							
	Process	Instrument	Bleed	A	B	C	D	E	F	G	H
SM2VF-F8N	1/2" Female NPT	Flange	1/4" Female NPT	93.8	33.6	41.4	47.8	97.0	25.4	69.0	31.8

Vertical Style (Direct Mounting)

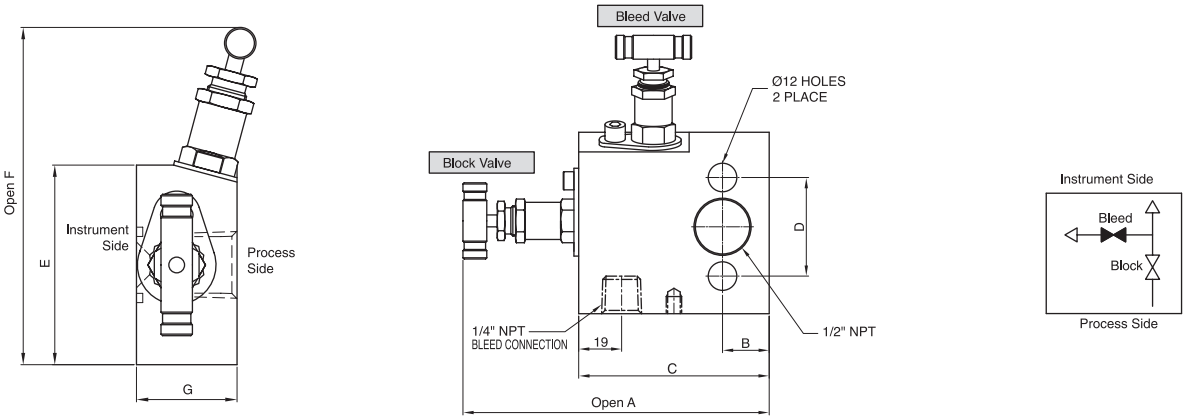

Part Number	End Connections			Weight Dimensions						
	Process	Instrument	Bleed	A	B	C	D	E	F	G
SM2VD-F8N	1/2" Female NPT	Flange	1/4" Female NPT	116.0	17.0	63.5	41.4	63.5	115.0	28.6

• All dimensions in millimeters unless specified as "inch". Dimension are for reference only and are subject to change.
• To order a manifold with optional Grafoil packing, add-G to the manifold ordering number.

3-Valve Manifolds

Horizontal Style(Remote Mounting)

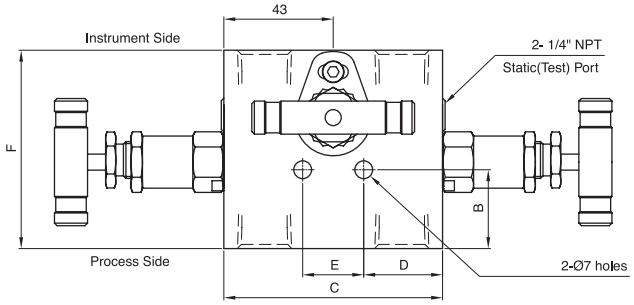

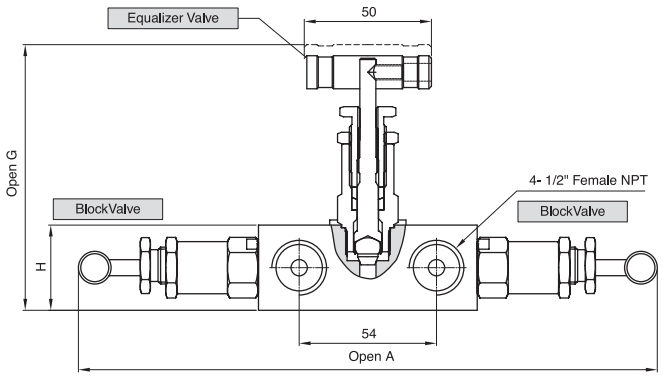

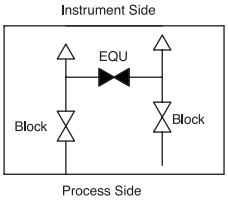

Part Number	End Connections		Weight Dimensions							
	Process	Instrument	A	B	C	D	E	F	G	H
SM3V-F8N	1/2" Female NPT		228.0	31.0	86.0	31.0	24.0	78.0	106.0	33.5

Horizontal Single Flange Style (Direct Mounting)

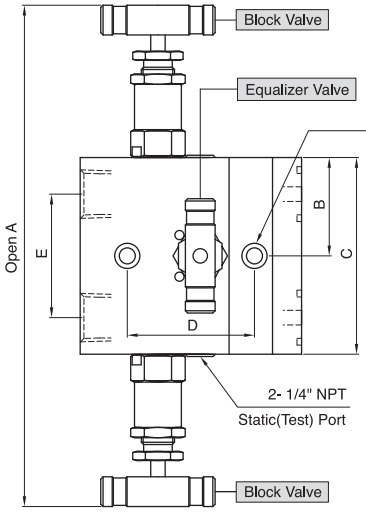

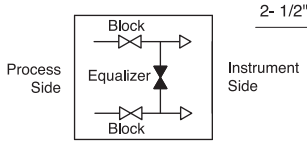

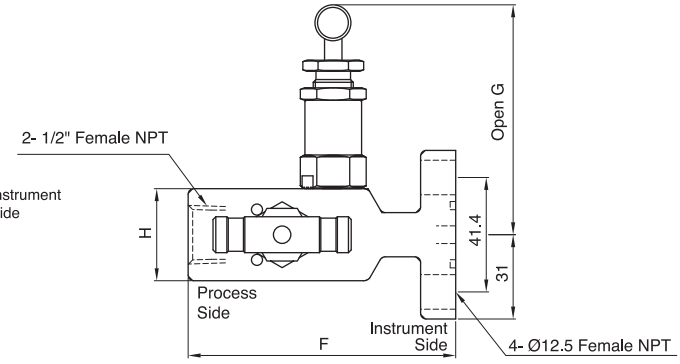

Part Number	End Connections		Weight Dimensions							
	Process	Instrument	A	B	C	D	E	F	G	H
SM3VF-F8N	1/2" Female NPT	Flange	228.0	43.0	86.0	55.6	54.0	97.0	87.7	31.8

• All dimensions in millimeters unless specified as “inch”. Dimension are for reference only and are subject to change.
• To order a manifold with optional Grafoil packing, add-G to the manifold ordering number.

3-Valve Manifolds

Horizontal Dual Flange Style (Direct Mounting)

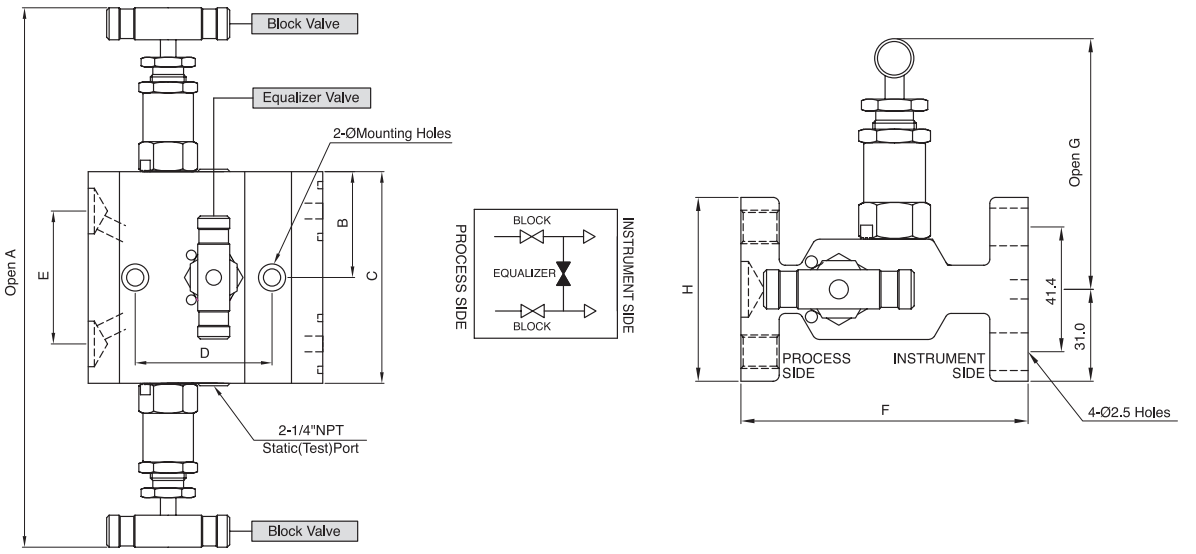

Part Number	End Connections		Weight Dimensions							
	Process	Instrument	A	B	C	D	E	F	G	H
SM3VDF	Flange	Flange	228.0	43.0	86.0	55.6	54.0	96.4	87.7	62.0

Vertical Style (Direct Mounting)

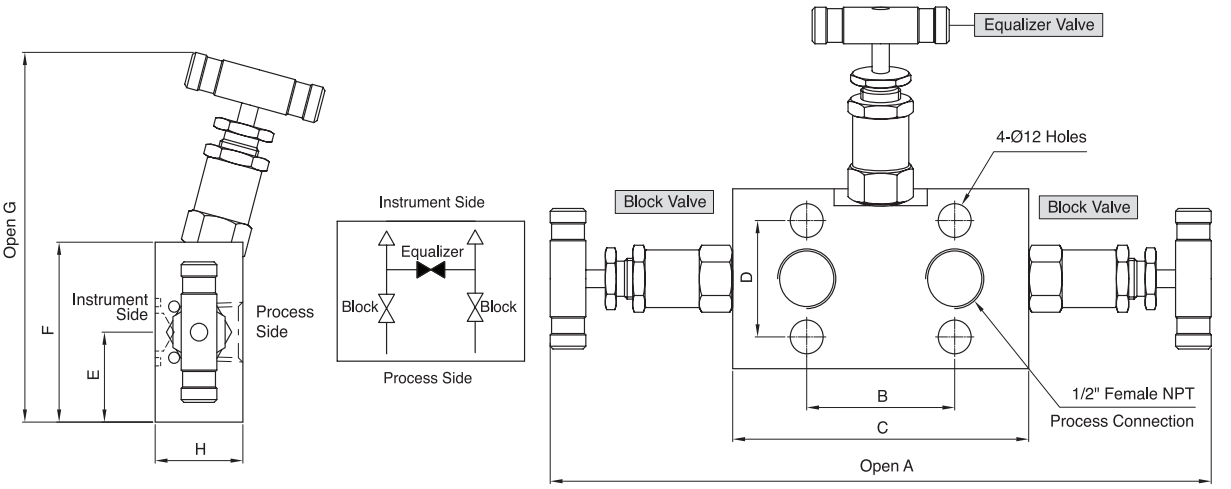

Part Number	End Connections		Weight Dimensions							
	Process	Instrument	A	B	C	D	E	F	G	H
SM3VD-F8N	1/2" Female NPT	Flange	250.0	54.0	108.0	41.4	32.0	64.0	136.0	32.0

• All dimensions in millimeters unless specified as “inch”. Dimension are for reference only and are subject to change.
• To order a manifold with optional Grafoil packing, add-G to the manifold ordering number.

5-Valve Manifolds

Horizontal Style(Remote Mounting)

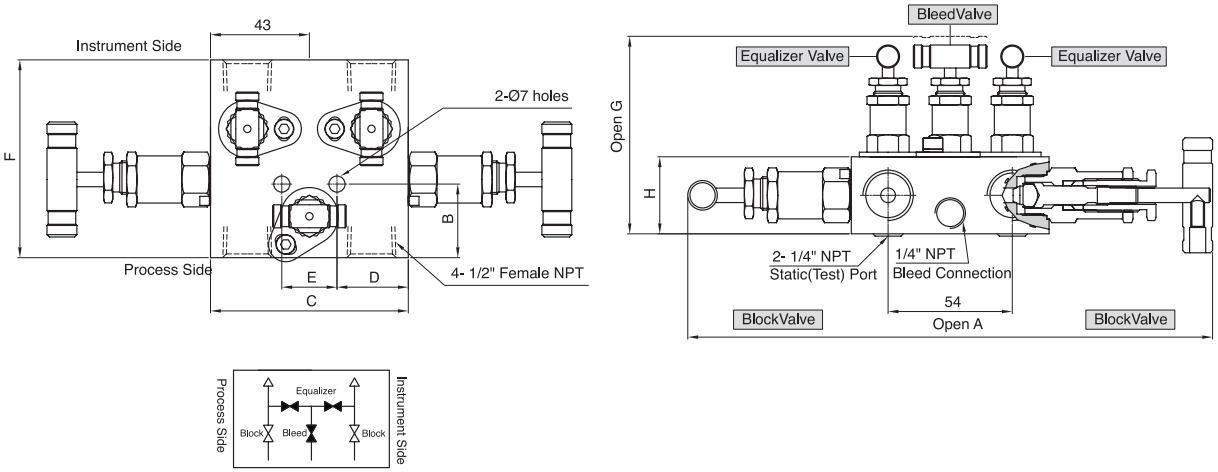

Part Number	End Connections			Weight Dimensions							
	Process	Instrument	Bleed	A	B	C	D	E	F	G	H
SM5V-F8N	1/2" Female NPT		1/4" Female NPT	228.0	32.0	86.0	31.0	24.0	86.0	85.9	33.5

Horizontal Single Flange Style (Direct Mounting)

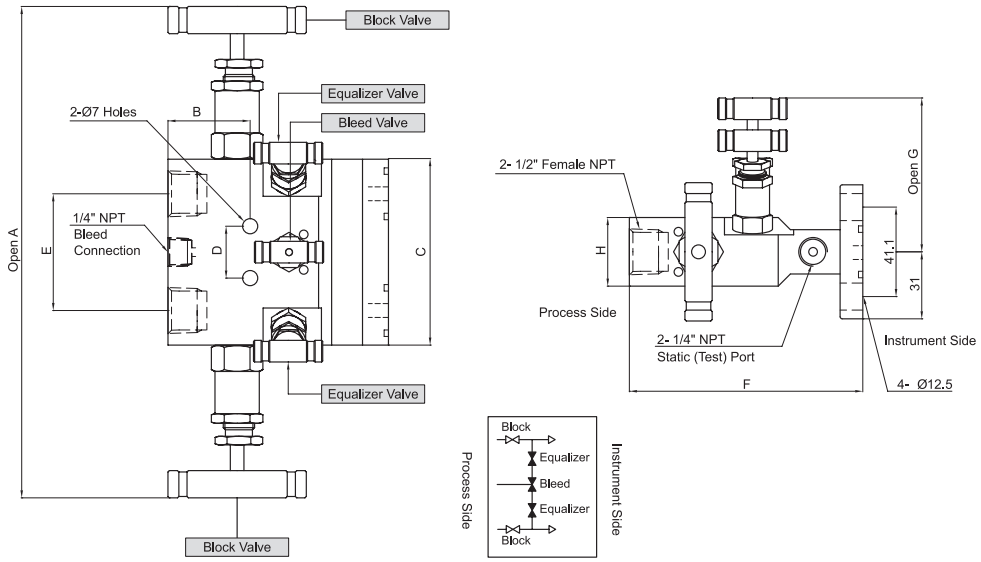

Part Number	End Connections			Weight Dimensions							
	Process	Instrument	Bleed	A	B	C	D	E	F	G	H
SM5VF-F8N	1/2" Female NPT	Flange	1/4" Female NPT	228.0	38.0	86.0	24.0	54.0	108.0	69.0	31.8

• All dimensions in millimeters unless specified as “inch”. Dimension are for reference only and are subject to change.
• To order a manifold with optional Grafoil packing, add-G to the manifold ordering number.

5-Valve Manifolds

Horizontal Dual Flange Style (Direct Mounting)

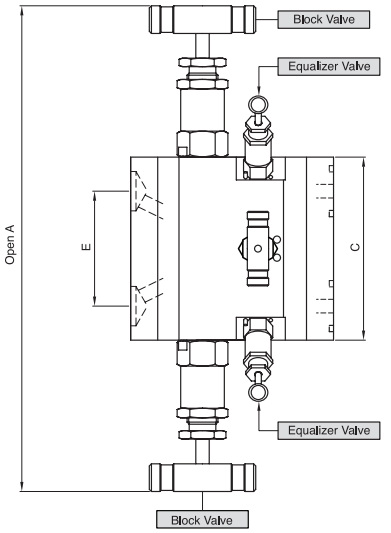

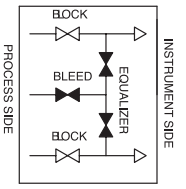

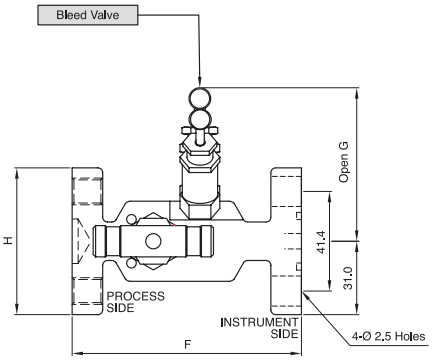

Part Number	End Connections			Weight Dimensions (mm)							
	Process	Instrument	Bleed	A	B	C	D	E	F	G	H
SM5VDF	Flange	Flange	1/4" Female NPT	228.0	32.0	86.0	24.0	54.0	96.4	69.0	61.0

Vertical Style (Direct Mounting)

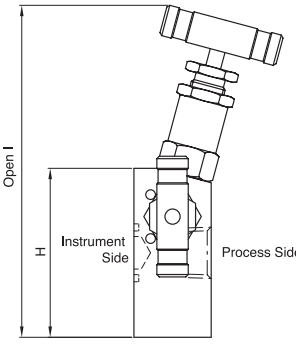

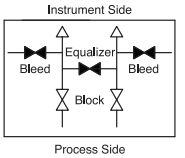

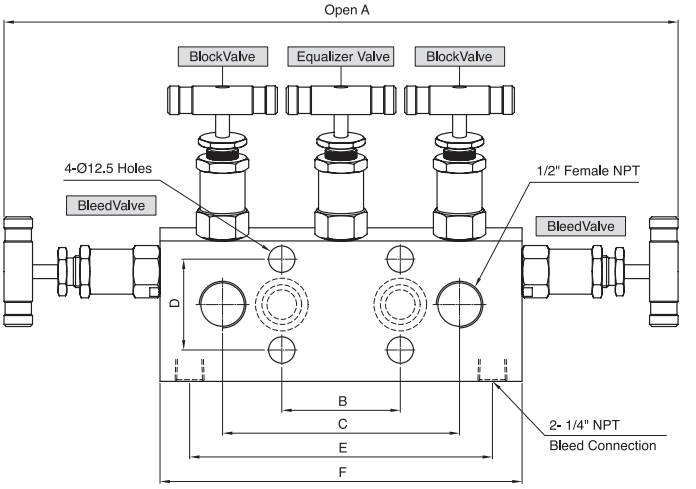

Part Number	End Connections			Weight Dimensions (mm)								
	Process	Instrument	Bleed	A	B	C	D	E	F	G	H	I
SM5VD-F8N	1/2" Female NPT	Flange	1/4" Female NPT	312.0	54.0	102.0	41.4	138.0	158.0	148.0	76.2	32.0

• All dimensions in millimeters unless specified as “inch”. Dimension are for reference only and are subject to change.
• To order a manifold with optional Grafoil packing, add-G to the manifold ordering number.

Manifolds Accessories

Flange Bolts & Seals

Flange Bolts

Flange Bolt	Part Number	Hex Size mm (in.)	Length mm (in.)	Threads	Bolt Material Designator
Standard Hex Head Bolt	SM-FB	15.87 (5/8)	25.0 (1.0)	7/16 - 20	Stainless Steel : -S Carbon Steel : -C
Long Stud with Hex Nut	SM-LFB		58.0 (2.28)		
Short Hex Head Bolt	SM-SFB		22.2 (0.875)		

Flange Seals

Seal Material	Ordering No.	Temperature Rating
Viton	SM - FS - V	-20℉ ~ 450℉ (-28℃ ~ 232℃)
PTFE	SM - FS	-65℉ ~ 250℉ (-53℃ ~ 121℃)
Grafoil	SM - FS - GR	-65℉ ~ 1000℉ (-53℃ ~ 537℃)

Concentric & Eccentric Oval Flange

- Eccentric Flanges and Pipe Nipple allow connections of flange - to - flange manifolds to process flange taps or process root valves.
- Standard connection is female NPT 1/2″.
- Concentric & eccentric oval flange ordering number : Concentric oval flange female NPT 1/2″ : SM - COF - F8N
  Eccentric oval flange female NPT 1/2″ : SM - EOF - F8N
- Dimensions, in millimeters (inches), are for reference only and are subject to change.

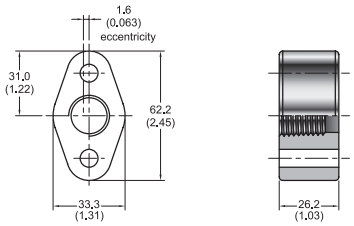

Concentric & Eccentric Pipe Nipple

Type	Part Number	Material	Pressure Rating @70℉ (20℃) psig (bar)	Temperature Rating ℉ (℃)	Pressure Rating @Max. temperature
Concentric	SM - CPN - S	SS316 / A276	10000 (689)	-65 to 1200 (-53 to 648)	2850 psig @ 1200℉ (196 bar @ 648℃)
	SM - CPN - C	Carbon Steel / A108	8000 (551)	-20 to 350 (-28 to 176)	6970 psig @ 350℉ (480 bar @ 176℃)
Eccentric	SM - EPN - S	SS316 / A276	7500 (516)	-65 to 1200 (-53 to 648)	2140 psig @ 1200℉ (147 bar @ 648℃)
	SM - EPN - C	Carbon Steel / A108	6000 (413)	-20 to 350 (-28 to 176)	5230 psig @ 350℉ (360 bar @ 176℃)

* Dimensions, in millimeters (inches), are for reference only and are subject to change.

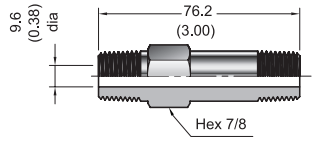

Concentric

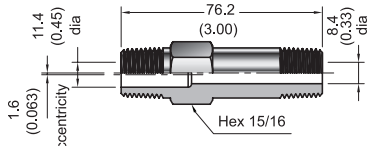

Eccentric

Calibration Fittings

Calibration fittings connect directly to the bleed port of differential pressure transmitter.

Material	Part Number	SUPERLOK O.D	Stright Male Thread
Stainless Steel / A276	SCAL4 - 1U	1/4″	1/4 - 28UNF
	SCAL4 - 2U		5/16 - 24UNF

Vent plugs, Bleed & PurgeValves

- Bleed & Purge valves used to vent to atmosphere and to assist in calibration.
- Are offered in 1/4, 3/8, and 1/2 in. male NPT sizes.
- For more information, see the SUPERLOK BLEED & PURGE VALVE catalog. (BMT CBPV)
- Dimensions, in millimeters (inches), are for reference only and are subject to change.

Instrumentation Gauge Valves

SGBV / SGBV2 Series

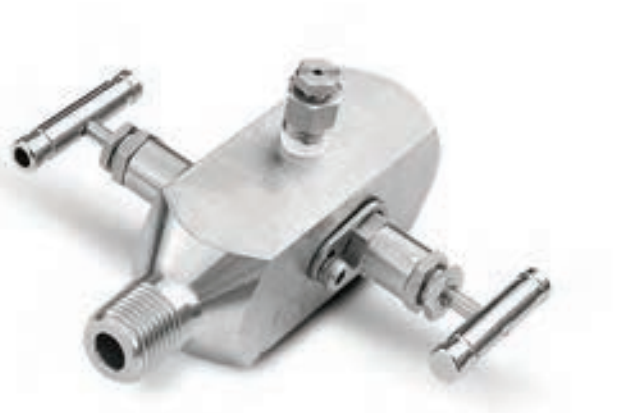

Features

- Stainless Steel construction.
- 1/2 in. and 3/4 in, male to 1/2 in. female end connections.
- 1/2 in. female gauge ports standard.

Specifications

Maximum Working Pressure Rating	6000 psig (413 bar) @100°F(38°C)
Temperature Rating	-65 to 450°F (-54 to 232 °C) with PTFE packing
Body Material	316 Stainless Steel
Orifice	0.125” (3.2mm), 0.250” (6.4mm)

Testing

- Each Valve is tested with nitrogen at 1000psig(69bar) to maximum allowable leak rate of 0.1 SCCM.
- Hydrostatic shell test is porformed at 1.5 times of the working pressure. (OPTION)

Ordering Information

Example : SGBV - M 8N - F 8N - SS

(1) SGBV (2) M (3) 8N (2) F (3) 8N (4) SS

1. Valve Series

SGBV : Gauge
SGRV : Gauge Root Valve
SGBV2 : Gauge 2- Vale

2. End Connection Type

M : Male Pipe Thread
F : Female Pipe Thread

3. Port Size

Pipe Thread Designation

Size (inch)	1/2	3/4
Screwed NPT	8N	12N
Screwed BSPT	8R	12R

4. Body Material

SS : 316 Stainless Steel

Gauge Valve

Gauge / Root Valve

SGBV(Gauge Valve)

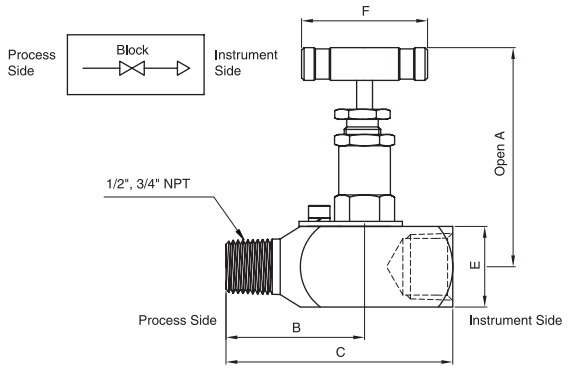

SGRV(Gauge Root Valve)

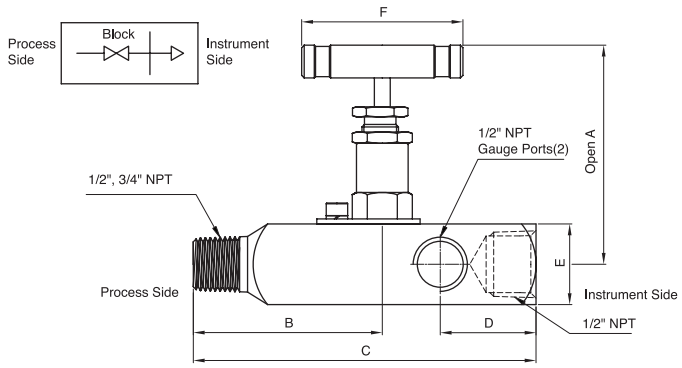

Part Number	End Connections		Dimensions (mm)					
	Process	Instrument	A	B	C	D	E	F
SGBV-M8N-F8N	1/2" Male NPT	1/2" Female NPT	68.4	54.0	90.0	-	32.0	45.0
SGBV-M12N-F8N	3/4" Male NPT	1/2" Female NPT						
SGRV-M8N-F8N	1/2" Male NPT	1/2" Female NPT	68.4	75.0	136.0	38.1	32.0	45.0
SGRV-M12N-F8N	3/4" Male NPT	1/2" Female NPT						

Gauge 2-Valve

SGBV 2

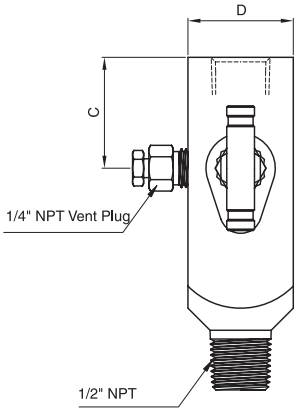

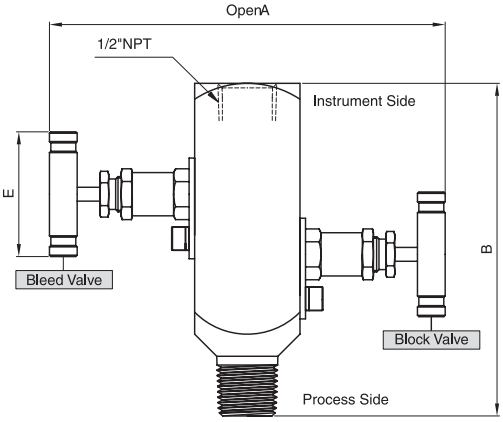

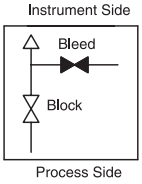

Part Number	End Connections		Dimensions (mm)				
	Process	Instrument	A	B	C	D	E
SGBV2-M8N-F8N	1/2" Male NPT	1/2" Female NPT	142	120	40	38	45

• All dimensions in millimeters unless specified as “inch”. Dimension are for reference only and are subject to change.
• To order a manifold with optional Grafoil packing, add-G to the manifold ordering number.

Needle Valve Series

SUPERLOK®

Check Valves & Industrial Excess Flow Valves

Check Valve & High Pressure Check Valve Series
Industrial Excess Flow Valves

www.superlok.com

Check Valves

SPCV Series

Features

- Fixed cracking pressure.
- Pressure rating up to 3000 psig @70°F(21℃)
- Temperature rating up to 375°F (191℃) with viton o-ring
- Variety of end connections.
- Each and every valves are tested at the factory.

Materials of Construction

BODY, SHOULDER, SLEEVE, NUT & TUBE

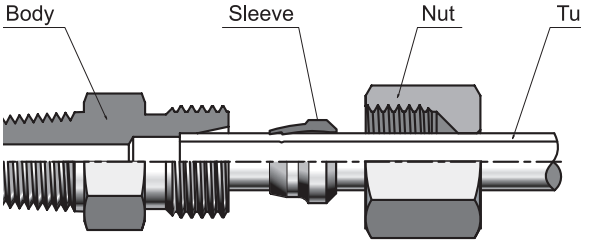

Fig.1

No.	Description	Material
1	Inlet Body	ASTM A276 Type 316
2	O-Ring	Viton
3	Poppet	ASTM A276 Type 316
4	Spring	304 Stainless Steel
5	Outlet Body	ASTM A276 Type 316

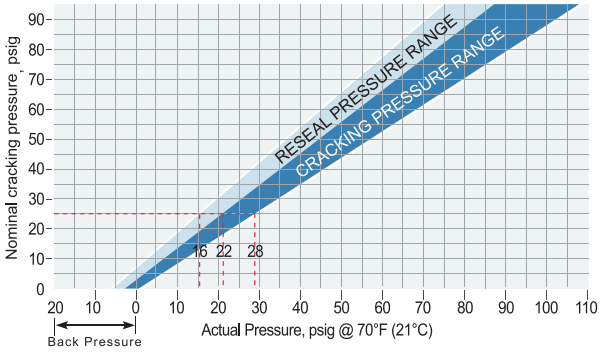

O-Rings

O-ring Material	Temperature Rating°F(℃)	Designator
Buna N	-10 to 250 (-23 to 121)	-N
Ethylene Propylene	-70 to 250 (-57 to 121)	-E
Viton (Fluorocarbon)	-10 to 375 (-23 to 191)	Standard
Kalrez	-15 to 500 (-26 to 260)	-K
Neoprene	-35 to 225 (-37 to 107)	-P

To order, insert the seal material designator into the valve ordering number. ex)SPCV-S8-1P-N

Back Pressure

Back pressure may be required to reseal the valves with nominal cracking pressure of 5psi or lower.

Example : For a valve with a spring having a rated cracking pressure of 25 psig (1.72 bar), the actual cracking pressure ranges between 22 and 28 psig (1.52 to 1.93 bar). The re-seal pressure range would be 16 to 22 psig (1.10 to 1.52 bar). Check valves having springs with rated crack pressure of 3 psig (0.21 bar) or less may require up to 4 psig (0.28 bar) back pressure to re-seal bubble-tight.

Testing

Every check valve is factory tested for crack and reseal performance.

Table of Dimensions

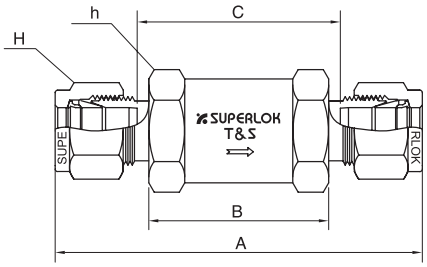

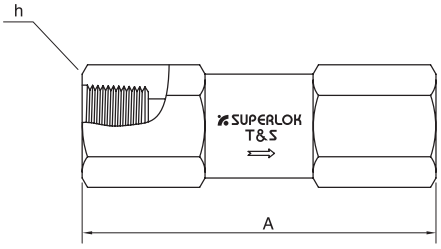

Part Number		Cv	End Connection	Dimensions				
				A	B	C	h	H
SPCV	S2	0.1	1/8 SUPERLOK	57.15	26.6	31.2	15.88	11.11
	F2N	0.47	1/8 Female NPT	50.00	-	-	15.88	-
	S4	0.47	1/4 SUPERLOK	62.16	26.6	31.4	15.88	14.28
	F4N	0.47	1/4 Female NPT	57.10	-	-	19.05	-
	S6	1.5	3/8 SUPERLOK	76.20	37.6	42.4	22.22	17.46
	F6N	1.7	3/8 Female NPT	73.90	-	-	22.22	-
	S8	1.7	1/2 SUPERLOK	86.58	42.9	40.8	25.40	22.22
	F8N	2.6	1/2 Female NPT	90.60	-	-	27.00	-
	S10	2.6	5/8 SUPERLOK	91.68	48.0	42.8	28.50	25.40
	S12	4.5	3/4 SUPERLOK	99.78	56.1	51.1	31.80	28.57
	F12N	4.5	3/4 Female NPT	99.78	-	-	31.80	-
	S16	4.5	1 SUPERLOK	111.22	58.4	48.9	38.10	38.1
	F16N	4.5	1 Female NPT	114.30	-	-	41.27	-

• All dimensions in millimeters unless specified as “inch”. Dimension are for reference only, subject to change

Technical Data

Cracking pressure - the differential pressure between inlet and outlet, at which an initial flow is passing through the valve.
Reseal pressure - the differential pressure between outlet and inlet, at which no flow is passing through the valve.

Cracking and Reseal Pressure			down stream pressure psi (bar)	
Nominal Cracking Pressure psi (bar)	Cracking Pressure Range psi(bar)	Reseal Pressure psi (bar)		
1/3 (0.02)	up to 3 (0.21)	up to 6 (0.4) downstream pressure	1/8 in 1/4 in	1000 (68.9)
1 (0.07)	up to 4 (0.28)	up to 6 (0.4) downstream pressure		
10 (0.69)	7 to 15 (0.5 to 1.1)	3 (0.21) upstream pressure	3/8 in, 1/2 in 3/4 in, 1 in	200 (13.7)
25 (1.8)	20 to 30 (1.4 to 2.1)	17 (1.2) upstream pressure		

*For cracking pressure of 25psi (1.8bar), downstream pressure is 3000psig (206bar).

Ordering Information

Example : **SPCV - S 6 - 10P - B**

1 2 3 4 5

1. Valve Series
2. End Connection
3. Connection Size & Type
4. Cracking Pressure(0.3P : 1/3 psi , 1P : 1 psi , 10P : 10 psi , 25P : 25 psi , 100P : 100 psi)
5. Nil : 316 Stainless Steel, B : Brass

High Pressure Check Valves

SHCV SERIES

Features

- Pressure rating up to 6,000psig(413bar) at 100˚F (37℃)
- Temperature rating up to 375˚F (190℃) with viton seal standard
- Cracking pressure fixed from 1/3 to 25psig (0.02 to 1.7bar)
- Variety of end connections
- 316 stainless steel body material as standard.
- Each and every valve is tested at the factory.

Technical Data

Series	Orifice (mm)	Working and Back Pressure @70˚F(20℃)	Flow Coefficient Cv	Nominal Cracking Pressure
SHCV1	4.8	6000psig (413bar)	0.67	1/3, 1, 5, 10, 25 psig (0.02, 0.06, 0.34, 0.68, 1.7 bar)
SHCV2	7.8		1.80	
SHCV3	15.0	5000psig (344bar)	4.70	

Seal Materials

Material	Temperature Rating	Designator
Viton	-10˚F to 375˚F (-23℃ to 190℃)	Standard
NBR	-10˚F to 250˚F (-23℃ to 121℃)	N
Ethylene Propylene	-50˚F to 300˚F (-45℃ to 148℃)	E

To order add the seal material designator to the ordering number.
ex) SHCV1-S8-1P-N

Cracking Pressure and Reseal Pressure at 70˚F (20℃)

Nominal Spring Size psig(bar)	Cracking Pressure Range psig(bar)	Min. Reseal Pressure psig(bar)	Designator
1/3 (0.02)	0~3 (0~0.20)	6 (0.41) back pressure	0.3P
1 (0.068)	0~4 (0~0.27)	5 (0.34) back pressure	1P
5 (0.34)	3~9 (0.20~0.62)	2 (0.13) back pressure	5P
10 (0.68)	7~15 (0.48~1.0)	3 (0.20)	10P
25 (1.7)	20~30 (1.3~2.0)	17 (1.1)	25P

Materials of Construction

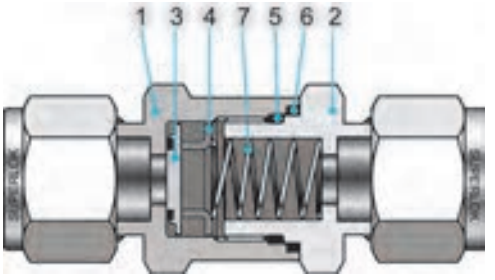

No.	Component	Material
1	Inlet Body	A276-316
2	Outlet Body	A276-316
3	Poppet	Viton-bonded SS316
4	Poppet Stopper	Stainless Steel 316
5	O-Ring	Viton(Standard)
6	Packing	PTFE
7	Spring	Stainless Steel 304

Testing	All valves are factory tested for cracking pressure and reseal performance.

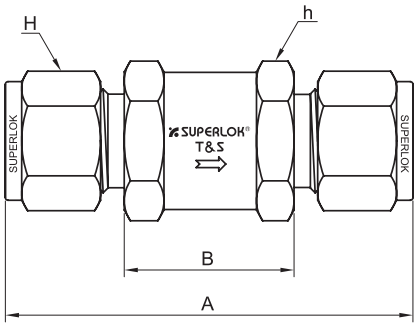

Table of Dimensions

Part Number		Orifice	Cv Max.	End Connection	Pressure Rating psig (bar)	Dimensions mm(in.)			
						A	B	H	h
SHCV1	S2	4.8	0.67	1/8″ SUPERLOK	6000(413)	57.7	26.4	11.1(9/16)	17.5(11/16)
	S4			1/4″ SUPERLOK		61.7		14.3(7/16)	
	S6M			6mm SUPERLOK				14	
	F4N			1/4″ FEMALE NPT		54.1	-	-	
	M2N			1/8″ MALE NPT		45.5	26.4		
	M4N			1/4″ MALE NPT		55.1			
SHCV2	S6	7.8	1.8	3/8″ SUPERLOK	6000(413)	69.9	31.2	17.5(11/16)	25.4(1)
	S8			1/2″ SUPERLOK		75.2		22.2(7/8)	
	S8M			8mm SUPERLOK		68.6		16	
	S10M			10mm SUPERLOK		71.1		19	
	S12M			12mm SUPERLOK		75.2		22	
	F6N			3/8″ FEMALE NPT	5000(344)	64.8	-	-	
	F8N			1/2″ FEMALE NPT	4600(316)	77.0			26.9(1-1/16)
	M6N			3/8″ MALE NPT	6000(413)	59.9	31.2		
	M8N			1/2″ MALE NPT		69.3			
SHCV3	S12	15	4.7	3/4″ SUPERLOK	5000(344)	89.4	45.2	28.6(1-1/8)	41.3(1-5/8)
	S16			1″ SUPERLOK	4700(323)	98.6	45.5	38.1(1-1/2)	
	S22M			22mm SUPERLOK	5000(344)	88.4		32	
	S25M			25mm SUPERLOK		98.6		40	
	F12N			3/4″ FEMALE NPT	4300(296)	82.0	-	-	
	F16N			1″ FEMALE NPT	4100(282)	97.3			
	M12N			3/4″ MALE NPT	5000(344)	83.6	45.5		
	M16N			1″ MALE NPT		93.2	45.7		

- All dimensions in millimeters unless specified as “inch”. Dimension are for reference only, subject to change
- Dimensions, shown on the above table, are measured based on finger-tight.
- ISO Tapered Threads are available upon request.

Ordering information

Example : **SHCV2 - S 6 - 1P - SS**

1 2 3 4 5

1 : Valve Series 2 : End Connection Type 3 : Connection Size 4 : Cracking Pressure Designator

5 : Body Material Designator [SS : 316 stainless steel(standard), B : Brass]

One-Piece Check Valves

SOCV SERIES

Features

- One-piece Body
- Working pressure up to 3000 psig (206bar)
- Temperature rating up to 375°F (190℃) with viton seal standard.
- Cracking pressure fixed from 1/3 to 25psig (0.02 to 1.7 bar)
- NPT and ISO pipe end connections
- 316 stainless steel and brass materials
- Each and every valve is tested at the factory.

Technical Data

Nominal Cracking Pressure	1/3, 1, 10 and 25psig (0.02, 0.06, 0.68,1.7bar)
Maximum Working Pressure at 70°F (20℃)	3000psig (206bar)
Maximum Back Pressure at 70°F (20℃)	3000psig (206bar)
Flow Coefficient (Cv)	SOCV1 / SOCV2 : 0.35 SOCV3 / SOCV4 : 1.20
Temperature Rating	VITON O-ring : -10°F to 375°F (-23℃ to 190℃) NBR O-ring : -10°F to 250°F (-23℃ to 121℃) (add "N" to the end of ordering number)

Cracking Pressure and Reseal Pressure

SOCV Series Valves with nominal cracking pressure of 20 psig (1.3 bar) or lower may requir back pressure to reseal bubble-tight.

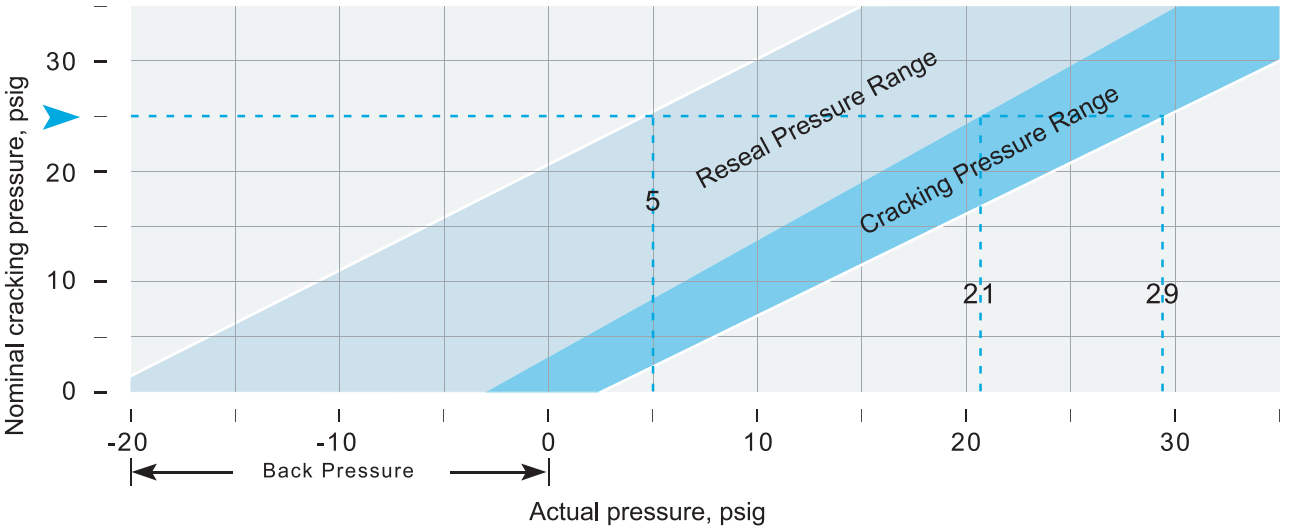

Testing	All valves are factory tested for cracking pressure and reseal performance.

Table of Dimensions

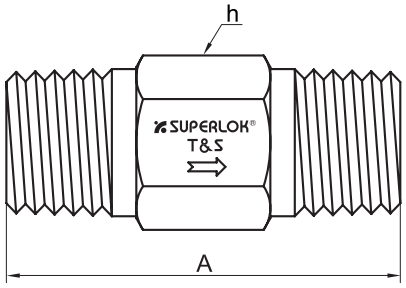

Part Number		End Connection		A	h Hex mm (in.)
		Inlet	Outlet		
SOCV1	M4N	1/4 Male NPT	1/4 Male NPT	41.2	14.3 (9/16)
	M4R	1/4 Male ISO	1/4 Male ISO		
SOCV2	F4N	1/4 Female NPT	1/4 Female NPT	61.2	19.1 (3/4)
	F4R	1/4 Female ISO	1/4 Female ISO	64.5	
	M4N-F4N	1/4 Male NPT	1/4 Female NPT	44.5	
	F4N-M4N	1/4 Female NPT	1/4 Male NPT	58.2	
SOCV3	M8N	1/2 Male NPT	1/2 Male NPT	57.9	22.2 (7/8)
SOCV4	F8N	1/2 Female NPT	1/2 Female NPT	94.2	26.9 (1-1/16)
	M8N-F8N	1/2 Male NPT	1/2 Female NPT	71.9	

• All dimensions in millimeters unless specified as “inch”. Dimension are for reference only, subject to change

Materials of Construction

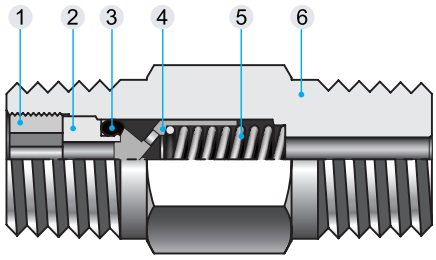

No.	Component	Valve Body Materials	
		Stainless Steel	Brass
1	Insert Lock Screw	316SS / A276	Brass
2	Insert	316SS / A276	Brass
3	O-Ring	VITON	NBR
4	Poppet	316SS / A276	Brass
5	Spring	SS304	
6	Body	316SS / A276	Brass

Ordering information

Example : **SOCV1 - M 4N - 1P - SS**

1 2 3 4 5

1 : Valve Series 2 : End Connection Type 3 : Connection Size

4 : Cracking Pressure Designator(0.3P : 1/3psig, 1P : 1psig, 10P : 10psig, 25P : 25psig)

5 : Body Material Designator [SS : 316 stainless steel(standard), B : Brass]

One-Piece Adjustable Check Valves

SOACV SERIES

Features

- One-Piece body
- Working pressure up to 3000psig (206 bar)
- Cracking pressure adjustable from 3 to 600psig (0.2 to 41.3bar)
- NPT and ISO pipe end connections in 1/4 and 1/2 in. sizes
- 316 stainless steel and brass materials
- Each and every valve is tested at the factory.

Technical Data

No.	Component	Material
Cracking Pressure Ranges	3 to 50psi (0.2 to 3.4bar) 50 to 150psi (3.4 to 10.3bar) 150 to 350psi (10.3 to 24.1bar) 350 to 600psi (24.1 to 41.3bar)	
Working and Back Pressure at 70°F (20℃)	3000psig (206bar)	
Temperature Rating	VITON O-Ring : -10°F to 375°F (-23℃ to 190℃) NBR O-Ring :-10°F to 250°F (-23℃ to 121℃)	
Flow Coefficient (Cv)	0.35	1.20

Cracking and Reseal Pressure at 70°F (20℃)

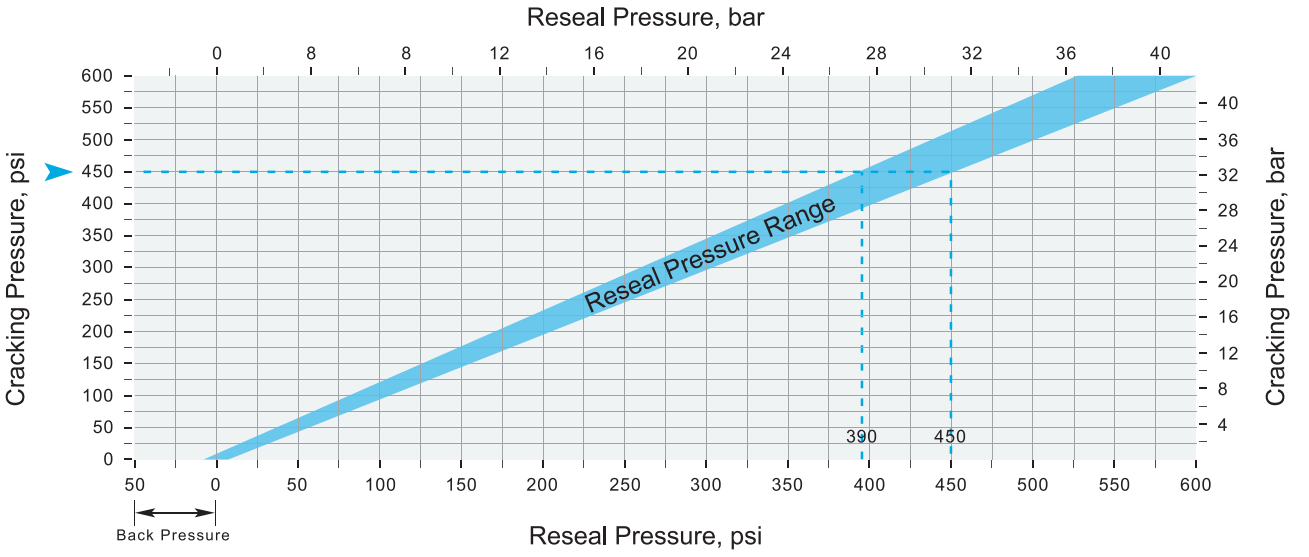

Testing	All valves are factory tested for cracking pressure and reseal performance.

Table of Dimensions

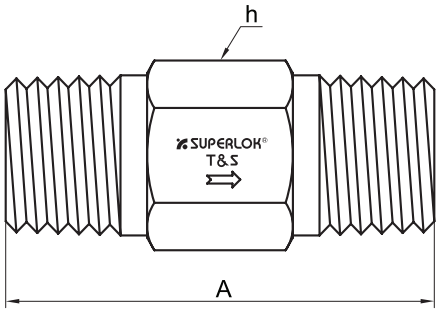

Part Number		End Connection	A	h Hex mm (in.)
SOACV1	M4N	1/4 Male NPT	41.1	14.3 (9/16)
	M4R	1/4 Male ISO	41.1	14.3 (9/16)
SOACV2	F4N	1/4 Female NPT	75.7	19.1 (3/4)
SOACV3	M8N	1/2 Male NPT	65.0	22.2 (7/8)
	M8R	1/2 Male ISO	65.0	22.2 (7/8)

• All dimensions in millimeters unless specified as “inch”. Dimension are for reference only, subject to change

Materials of Construction

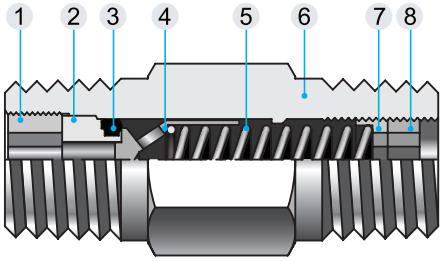

No.	Component	Valve Body Materials	
		Stainless Steel	Brass
1	Insert Lock Screw	316SS / A276	Brass
2	Insert	316SS / A276	Brass
3	O-Ring	VITON	NBR
4	Poppet	316SS / A276	Brass
5	Spring	SS304	
6	Body	316SS / A276	Brass
7	Adjusting screw	316SS / A276	Brass
8	Locking screw	316SS / A276	Brass

Ordering information

Example : **SOACV1 - M 4N - A - SS**

1 2 3 4 5

1 : Valve Series 2 : End Connection Type 3 : Connection Size
4 : Cracking Pressure Designator (A : 3~50 psi, B : 50~150 psi, C : 150~350 psi, D : 350~600psi)
5 : Body Material Designator [SS : 316 stainless steel(standard), B : Brass]

Adjustable Check Valves

SACV SERIES

Features

- Working pressures up to 3000 psig (206 bar)
- Temperature range from -10˚F to 375˚F (-23℃ to 191℃) with Viton Seal
- Cracking pressures adjustable from 3 to 600psi (0.2 to 14.3bar)
- Variety of end connections
- 316 stainless steel and brass materials
- Each and every valve is tested at the factory.

Technical Data

Series	SACV
Cracking Pressure Ranges	3 to 50psi (0.2 to 3.4bar) 50 to 150psi (3.4 to 10.3bar) 150 to 350psi (10.3 to 24.1bar) 350 to 600psi (24.1 to 41.3bar)
Working and Back Pressure at 70˚F (20℃)	3000psig (206bar)
Temperature Rating	VITON O-Ring : -10˚F to 375˚F (-23℃ to 190℃) NBR O-Ring :-10˚F to 250˚F (-23℃ to 121℃)
Flow Coefficient (Cv)	0.37

Cracking and Reseal Pressure at 70˚F (20℃)

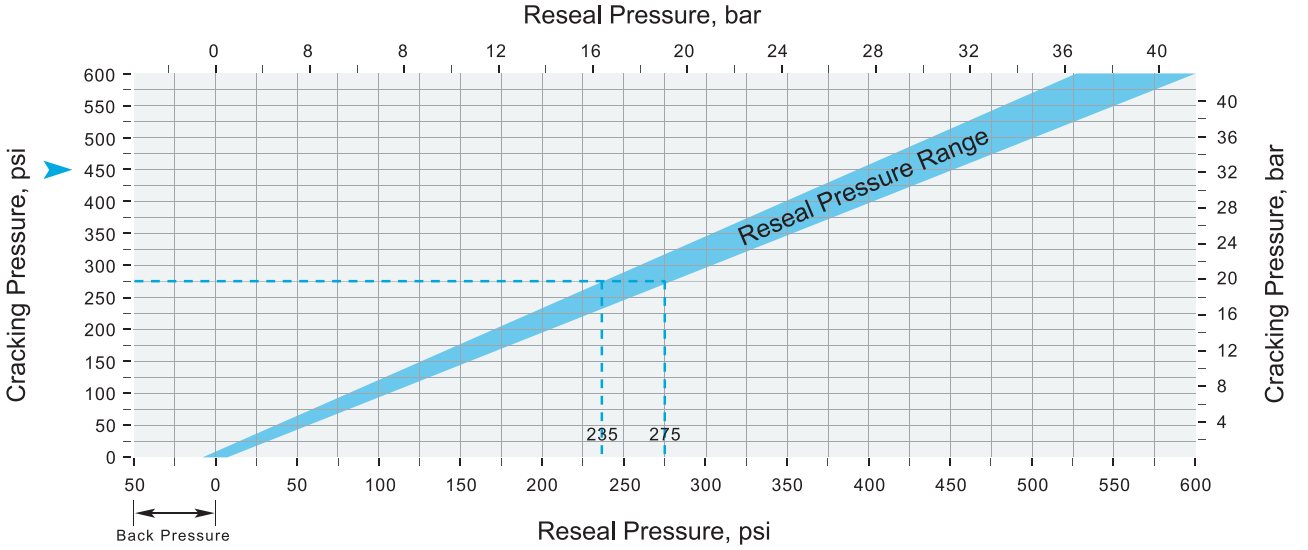

Testing	All valves are factory tested for cracking pressure and reseal performance.

Table of Dimensions

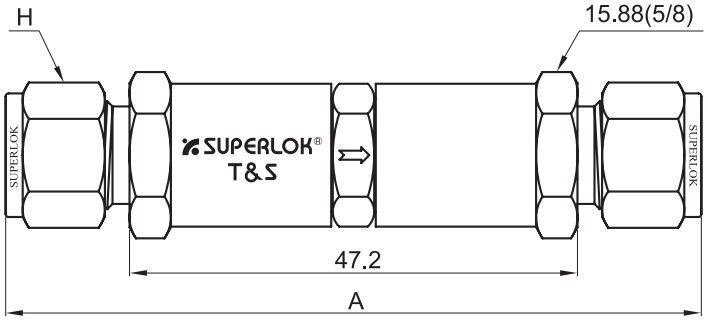

Part Number		End Connections		A (mm)	H mm(in.)
		Inlet	Outlet		
SACV	S4	1/4″ SUPERLOK		82.0	14.3 (9/16)
	S6M	6mm SUPERLOK			14
	S8M	8mm SUPERLOK		84.3	16
	M4N-S4	1/4 Male NPT	1/4″ SUPERLOK	79.2	14.3 (9/16)

• All dimensions in millimeters unless specified as “inch”. Dimension are for reference only, subject to change

Materials of Construction

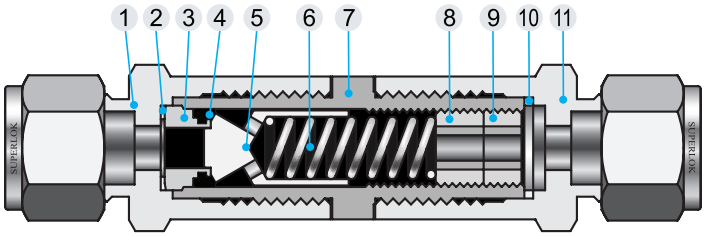

No.	Component	Valve Body Materials	
		Stainless steel	Brass
1	Inlet body	316SS / A276	Brass
2	Inlet gasket	PTFE - coated 316SS	
3	Insert	316SS / A276	Brass
4	O-Ring	VITON	NBR
5	Poppet	316SS / A276	Brass
6	Spring	SS304	
7	Center body	316SS / A276	Brass
8	Adjust screw		316SS / A276
9	Locking screw		
10	Outlet gasket	PTFE - coated 316SS	
11	Outlet Body	316SS / A276	Brass

Ordering information

Example :

SACV - S 4 A - SS

1 2 3 4 5

1 : Valve Series 2 : End Connection Type 3 : Connection Size

4 : Cracking Pressure Designator (A : 3~50 psi, B : 50~150 psi, C : 150~350 psi, D : 350~600psi)

5 : Body Material Designator (SS : 316 stainless steel(standard), B : Brass)

Industrial Excess Flow Valves

SEFV Series

Inproduction

■ Excess Flow Valves are designed to limit flow of fluid to a predetermined rate.
■ When flow reaches a predetermined rate the poppet will trip, limiting or stopping flow.
■ When pressure is equalized across the valve, the poppet will reset to open.

Features

■ 2-piece body
- Allows for simple spring and seal maintenance
■ Spring-loaded actuation
■ Automatic reset
- The bleed vent allows the valve to automatically reset
■ Variety of end connections
- Can be assembled in any system or application
  Stainless steel construction

Specifications

Pressure rating	6000psig (413bar) @100°F(38°C)
Temperature rating	-10 to 400°F (-23 to 204 °C)
Body material	316 Stainless Steel
End Connections	1/8″ to 1/2″ and 6mm to 12mm

Testing

Every Valve is factory tested for proper functionality.

Materials of Construction

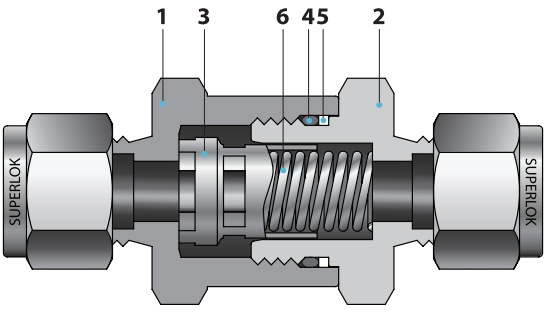

No.	Component	Material Grade / ASTM Specification
		Stainless Steel
*1	INLET BODY	A276-316
*2	OUTLET BODY	A276-316
*3	POPPET	A276-316
*4	O-RING	VITON
5	BACK-UP RING	PTFE
*6	SPRING	Stainless Steel 304

• Wetted components are marked "*"

Operation

- The poppet is loaded by a spring in the open position during normal system operation.
- If the system becomes unbalanced and the downstream pressure drops, the poppet rapidly move to the tripped position.
- The poppet will remain in the tripped position until system pressure becomes equal across the bleed vent in the poppet.
- The bleed vent in the poppet will allow the pressure to slowly equalize across the valve if the downstream line is closed or repaired.
- When the system pressure becomes equal, the spring automatically reset the poppet to the open position.

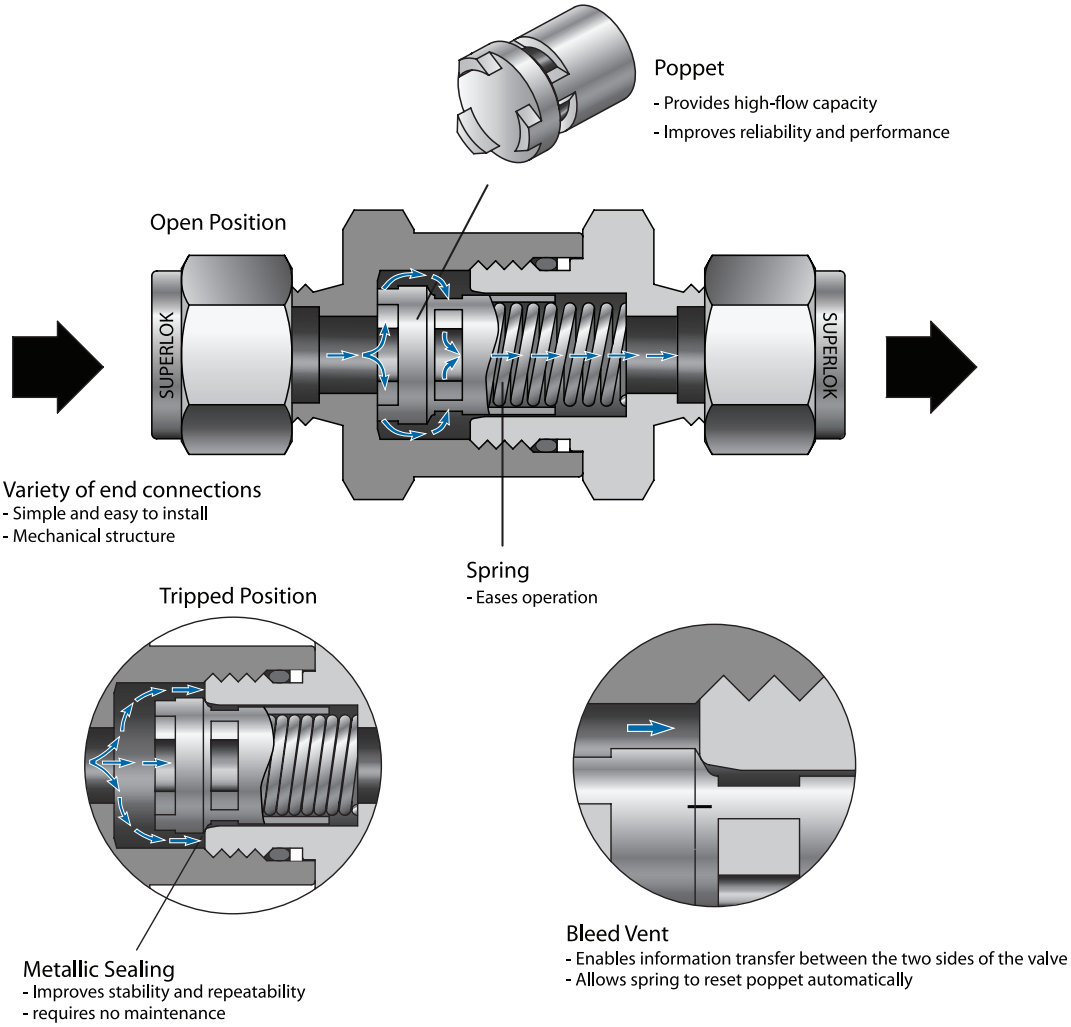

Technical Data

Pressure - Temperature Ratings

- Ratings based on Viton O-rings.
- 5000 psig (344 bar) for the SEFV series valves with end connections 3/8″ female NPT.
- 4600 psig (316 bar) for the SEFV series valves with end connections 1/2″ femaie NPT.

Body Material	316 Stainless Steel
Temperature Rating °F (°C)	Working Pressure, psig (bar)
-10 to 100 (-23 to 27)	6000 (413)
200 (93)	5160 (355)
250 (121)	4910 (338)
300 (148)	4660 (321)
400 (204)	4280 (294)

O-ring Material	Temperature Rating °F (°C)
VITON	-10 to 400 (-23 to 204)
Buna-N	-40 to 250 (-40 to 121)
Ethylene Propylene	-50 to 300 (-45 to 148)
Kalrez	-10 to 400 (-23 to 204)

• Viton O-ring is standard.

SEFV Series

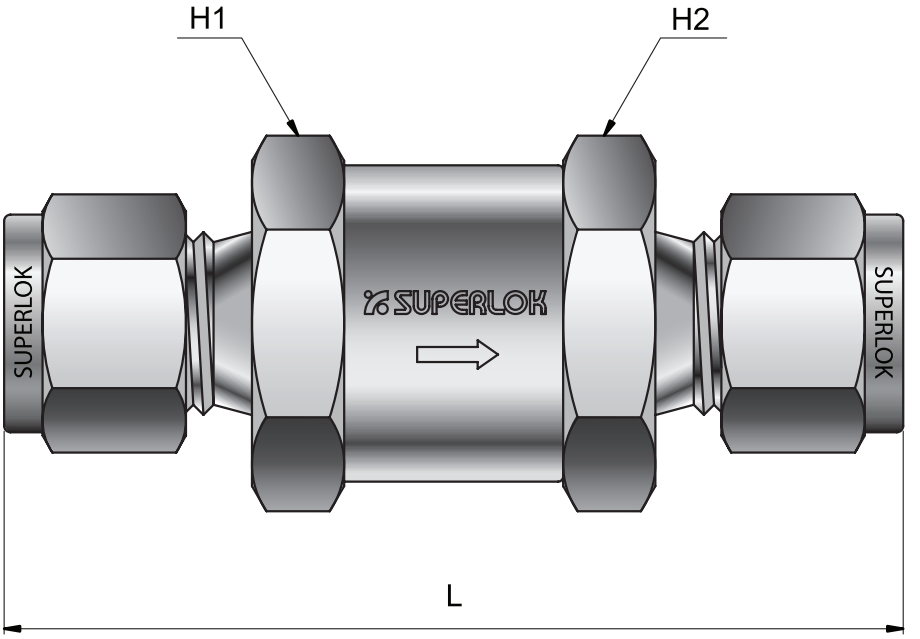

Table of Dimensions

Part Number		End Connections		Dimensions, Inch (mm)		
		INLET	OUTLET	L	H1	H2
SEFV1	S4	1/4″ SUPERLOK		2.43 (61.7)	11/16 (17.4)	
	S6M	6mm SUPERLOK		2.43 (61.7)		
	F2N	1/8″ Female NPT		1.87 (47.5)		
	F4N	1/4″ Female NPT		2.12 (53.8)		
	M2N	1/8″ Male NPT		1.79 (45.5)		
	M4N	1/4″ Male NPT		2.17 (55.1)		
	M4N-S4	1/4″ Male NPT	1/4″ SUPERLOK	2.30 (58.4)		
	M4N-F4N	1/4″ Male NPT	1/4″ Female NPT	2.13 (54.1)		
SEFV2	S6	3/8″ SUPERLOK		2.75 (69.9)	1 (25.4)	
	S8	1/2″ SUPERLOK		2.97 (75.4)		
	S8M	8mm SUPERLOK		2.70 (68.6)		
	S10M	10mm SUPERLOK		2.80 (71.1)		
	S12M	12mm SUPERLOK		2.96 (75.2)		
	F6N	3/8″ Female NPT		2.55 (64.8)		
	F8N	1/2″ Female NPT		3.03 (77.0)	1-1/16 (27.0)	
	M6N	3/8″ Male NPT		2.36 (59.9)	1 (25.4)	
	M8N	1/2″ Male NPT		2.73 (69.3)		
	M8N-S6	3/8″ Male NPT	3/8″ SUPERLOK	2.56 (65.0)		
	M8N-S8	1/2″ Male NPT	1/2″ SUPERLOK	2.85 (72.4)		
	M6N-F6N	3/8″ Male NPT	3/8″ Female NPT	2.46 (62.5)		
	M8N-F8N	1/2″ Male NPT	1/2″ Female NPT	2.89 (73.4)	1 (25.4)	1-1/16 (27.0)

- All dimensions in millimeters unless specified as “inch”. Dimension are for reference only, subject to change.
- Dimensions based on SUPERLOK nuts finger-tight.
- ISO Tapered Threads are available upon request

Flow Data at 70°F (20°C)

Air Flow - SEFV1 Series

Connection Sizes : 1/8″, 1/4″, 6mm

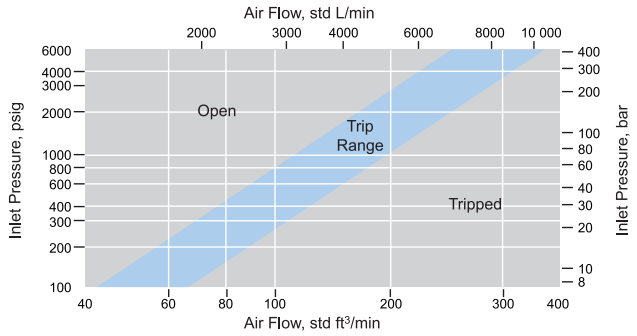

Air Flow - SEFV2 Series

Connection Sizes : 3/8″, 8mm, 10mm

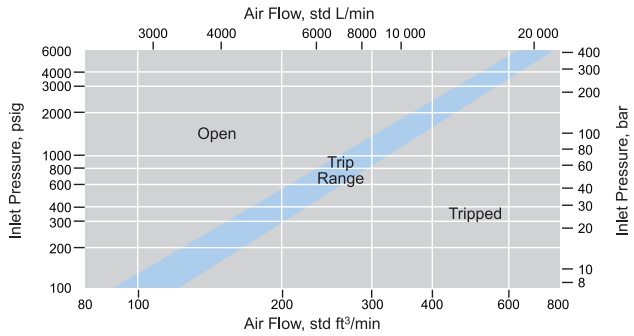

Air Flow - SEFV2 Series

Connection Sizes : 1/2″, 12mm

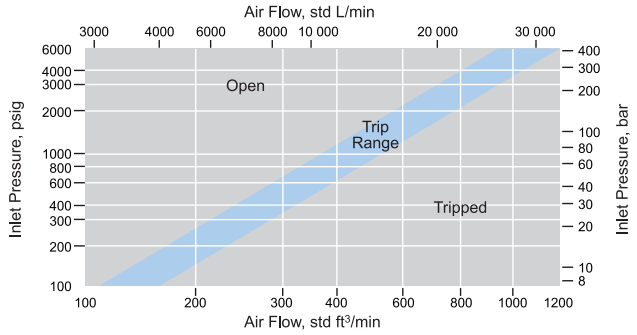

Water Flow - SEFV1, SEF2 Series

Series	Connection Size	Cv	Trip Range U.S. gal/min (L/min)
SEFV1	1/8″, 1/4″, 6mm	0.5	3.9 to 5.8 (14.7 to 21.9)
SEFV2	3/8″, 8mm, 10mm	1.1	8.2 to 10.0 (31.0 to 37.9)
	1/2″, 12mm		11.2 to 14.9 (42.4 to 56.4)

Ordering Information

Example : SEFV1 - M4N - S4 - EP - SS

1	2	3	2	3	4	5
SEFV1	M4 (Inlet)	N (Inlet)	S4 (Outlet)		EP	SS

1. Valve Series

SEFV1

SEFV2

2. Port Type (Inlet x Outlet)

S : SUPERLOK Tube Fitting

M : Male Pipe Thread

F : Female Pipe Thread

3. Port Size

Pipe Thread Designation

Size (inch)	1/8	1/4	3/8	1/2
Screwed BSPT	2R	4R	6R	8R
Screwed NPT	2N	4N	6N	8N

Tube O.D Designation

Tube O.D (inch)	1/4	3/8	1/2	-
Designation	4	6	8	-
Tube O.D (mm)	**6**	**8**	**10**	**12**
Designation	6M	8M	10M	12M

4. O-ring Material

Nil : Viton (Standard)

N : Buna N

EP : Ethylene propylene (EPDM)

KAL : Kalrez

5. Body Material

SS : 316 Stainless Steel

Check Valves & Industrial Excess Flow Valves

www.sks-online.com

SUPERLOK®

Other Valve Series

Plug Valves | Rising Plug Valves

Toggle Valves | Relief Valves | Bleed & Purge Valves

www.superlok.com

Plug Valves

SPV130 Series

Features

- Pressure Rating up to 3000psig (206 bar) @100℉(37℃)
- Temperature rating -10℉ to 400℉ (-23℃ to 204℃)
- Simple design with one piece body
- 316 stainless steel body materials
- Panel mountable
- Various end connector
- Straight through flow path
- Replaceble plug assembly
- Easy to clean and maintain

Testing

Every plug valve is factory tested for shutoff at 600 psig (41.3bar)

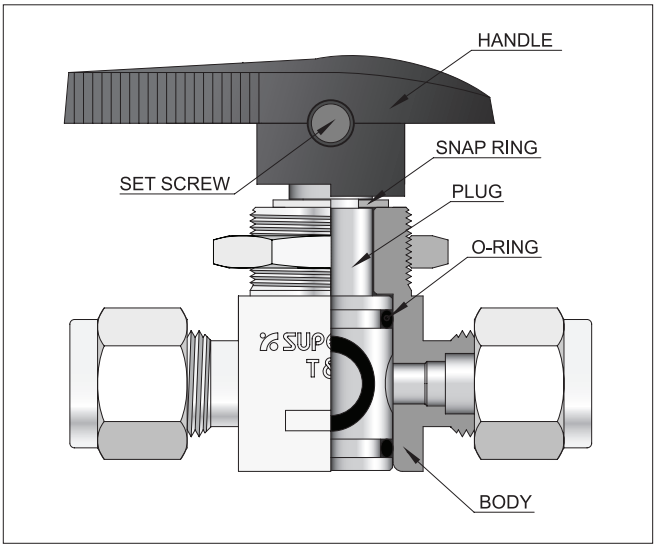

Technical Data

Material of Construction

Component	Material Grade
Body	SS316
Plug	PTFE-coated SS316
O-rings	VITON
Handle	Aluminum
Set Screw	Stainless Steel
Snap Ring	Stainless Steel

* Differential pressure is limited to 150 psig maximum if reverse flow occurs
  Reverse-flow throttling may be damage o-ring

Pressure-Temperature Rating

Series	SPV131,SPV132	SPV131	SPV132
Material	316SS	Brass	
Temperature, ℉(℃)	Working Pressure, psig (bar)		
-10 (-23) to 100 (37)	3000 (206)	3000 (206)	2000 (137)
150 (65)	3000 (206)	2500 (172)	2000 (137)
200 (93)	3000 (206)	2000 (137)	2000 (137)
250 (121)	2000 (137)	1500 (103)	1500 (103)
300 (148)	1000 (68.9)	1000 (68.9)	1000 (68.9)
350 (176)	1000 (68.9)	1000 (68.9)	1000 (68.9)
400 (204)	1000 (68.9)	400 (27.5)	400 (27.5)

Standard Style

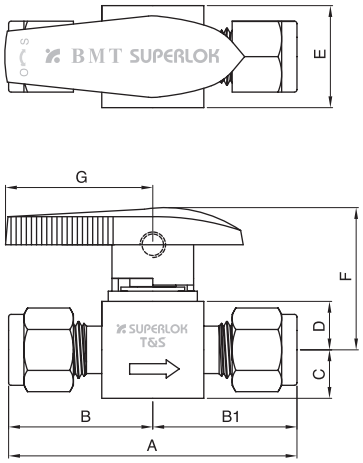

Panel Mounting Style

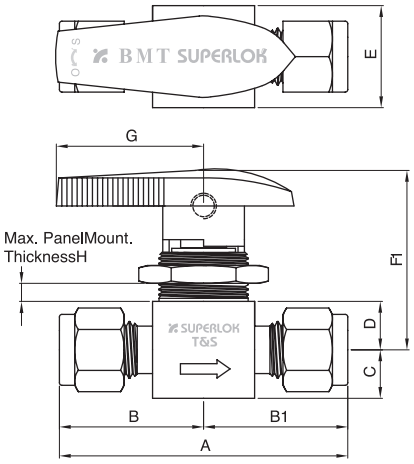

Table of Dimensions

Part Number		Orifice	CV	End Connection		Dimensions									
				Inlet	Outlet	A	B	B1	C	D	E	F	F1	G	H
SPV131	F2N	4.4	1.2	1/8″ Female NPT		45.2	22.6	22.6	9.5	9.5	20.0	27.9	35.5	28.9	6.4
	F4N		0.9	1/4″ Female NPT		53.1	26.6	26.6							
	M4N-F4N		0.9	1/4″ Male NPT	1/4″ Female NPT	50.8	24.2	26.6							
	M2N		1.0	1/8″ Male NPT		39.0	19.5	19.5							
	M4N		1.0	1/4″ Male NPT		48.4	24.2	24.2							
	M4N-S4		0.9	1/4″ Male NPT	1/4″ SUPERLOK	51.2	24.2	27.6							
	S2	2.3	0.1	1/8″ SUPERLOK		50.5	25.3	25.3							
	S4	4.4	1.6	1/4″ SUPERLOK		55.1	27.6	27.6							
	S6M		1.6	6mm SUPERLOK		55.1	27.6	27.6							
SPV132	F4N	7.2	4.3	1/4″ Female NPT		60.5	30.3	30.3	14.0	14.0	30.0	41.6	53.2	51.7	9.4
	F8N		2.7	1/2″ Female NPT		73.2	36.6	36.6							
	M8N		2.4	1/2″ Male NPT		67.1	33.5	33.5							
	S8M		6.4	8mm SUPERLOK		67.6	33.8	33.8							
	S10M		6.4	10mm SUPERLOK		68.1	34.1	34.1							
	S12M		4.8	12mm SUPERLOK		75.2	37.6	37.6							
	S6		6.4	3/8″ SUPERLOK		67.6	33.8	33.8							
	S8		4.4	1/2″ SUPERLOK		73.2	36.6	36.6							

- Dimensions shown with SUPERLOK nuts measure in the finger - tight, where applicable.
- All dimensions in millimeters unless specified as “inch”. Dimension are for reference only, subject to change.
- Ordering numbers that list F1, H dimensions are available in panel mounting style.
- To order, add-P to the series number. Example : SPV131P-S-4

Ordering Information

Example :

SPV131 - S 4 - SS

1 2 3 4

1 : Valve Series (Add - P : Panel Mounting Style) - SPV131(P), - SPV132(P)

2 : End Connection Designator

3 : Connection Size

4 : Material Designator - SS (BLANK) : 316 Stainless Steel, - B : Brass

Rising Plug Valves

SRPV Series

Features

- Non-rotating stem tip
- Straight-through orifice for maximum flow
- Stem dust seal protects threads from external contamination
- Replaceable seals, seat and stem tip
- Panel mounting option
- Gauge port option

Specifications

Pressure rating	6000psig (413bar) @100°F(37°C)
Temperature rating	-20 to 400°F (-28 to 204 °C)
Body material	316 stainless steel
Orifice	4.8mm, 6.4mm

Flow Data at 100 ℉ (37 ℃)

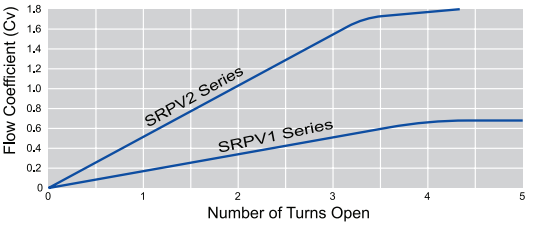

Testing

Each Valve is tested with nitrogen at 1000psig(69bar) to maximum allowable leak rate of 0.1 SCCM.

Technical Data

Pressure - Temperature Ratings

Body Material	316 Stainless Steel	
Seat Material	Acetal	PEEK
Temperature Rating °F (°C)	Working Pressure, psig (bar)	
-20 to 100 (-28 to 37)	6000 (413)	6000 (413)
200 (93)	2650 (182)	3000 (206)
250 (121)	1000 (68.9)	1600 (110)
300 (148)	-	1300 (89.5)
350 (176)	-	1200 (82.6)
400 (204)	-	1000 (68.9)

O-ring Material	Temperature Rating °F (°C)
VITON	-20 to 400 (-28 to 204)
Buna-N	-20 to 250 (-28 to 121)
Ethylene Propylene	-20 to 250 (-28 to 121)
Kalrez	-20 to 400 (-28 to 204)

• Viton O-ring is standard.

Materials of Construction

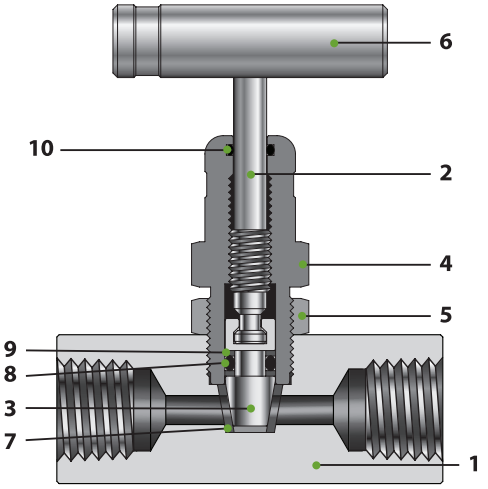

No.	Component	Material Grade / ASTM Specification
		Stainless Steel
*1	Body	A276-316
2	Stem	A276-316
*3	Stem tip	A276-316
*4	Bonnet	A276-316
5	Lock Nut	A276-316
6	Handle	A276-316
*7	Seat	Acetal
*8	Stem Seal	Viton
*9	Back-up Ring	PTFE
10	Dust Seal	Viton

• Wetted components are marked "*"

Table of Dimensions

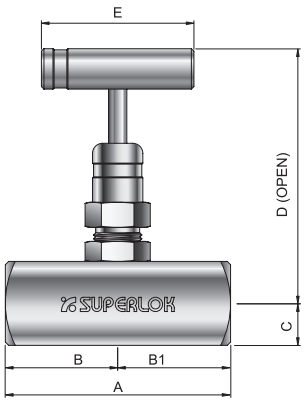

Standard Type

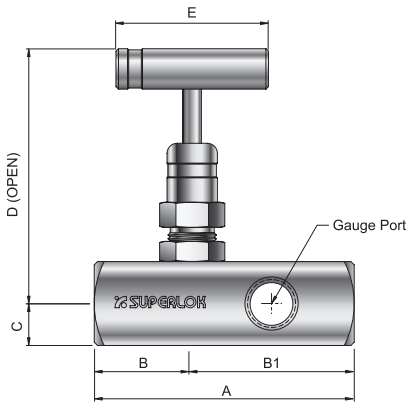

Gauge Port Type

Part Number		Orifice	Cv	End Connections		Dimensions					
				Port 1	Port 2	A	B	B1	C	D	E
SRPV1	F4N	4.8	0.63	1/4″ Female NPT		62.0	31.0	31.0	12.7	96.3	60.0
	M4N-F4N			1/4″ Male NPT	1/4″ Female NPT	76.2	45.2				
	M8N-F4N			1/2″ Male NPT	1/4″ Female NPT	81.1	50.1				
SRPV1-G4N	F4N			1/4″ Female NPT		78.0	31.0	47.0			
	M8N-F4N			1/2″ Male NPT	1/4″ Female NPT	97.1	50.1				
SRPV2	F8N	6.4	1.80	1/2″ Female NPT		84.0	42.0	42.0	16.0	96.9	
	M8N-F8N			1/2″ Male NPT	1/2″ Female NPT	103.1	61.1				
	M12N-F8N			3/4″ Male NPT	1/2″ Female NPT	103.1	61.1				
SRPV2-G8N	F8N			1/2″ Female NPT		107.4	42.0	65.4			
	M8N-F8N			1/2″ Male NPT	1/2″ Female NPT	126.5	61.1				
	M12N-F8N			3/4″ Male NPT	1/2″ Female NPT	126.5	61.1				

• All dimensions in millimeters unless specified as “inch”. Dimension are for reference only, subject to change
• ISO Tapered Threads are available upon request

Ordering Information

Example : **SRPV1 - F4N - PE - EP - P - SS**

1 2 3 4 5 6 7

1. Vavle Series

SRPV1 : Without gauge port
SRPV1-G4N : Gauge port 1/4″ NPT
SRPV2 : Without gauge port
SRPV2-G8N : Gauge port 1/2″ NPT

2. Port Type

M : Male Pipe Thread
F : Female Pipe Thread

3. Port Size

Pipe Thread Designation

Size (inch)	1/4	1/2	3/4
Screwed NPT	4N	8N	12N
Screwed BSPT	4R	8R	12R

4. Seat Material

Blank : Acetal (Standard)
PE : PEEK

5. O-ring Material

Blank : Viton (Standard)
N : Buna N
EP : Ethylene propylene (EPDM)
KAL : Kalrez

6. Panel Mounting

Blank : Without Panel Mounting (Standard)
P : Panel Mounting Type

7. Body Material

SS : 316 Stainless Steel

Toggle Valves

STV Series

Features

- Compact design.
- Quick acting.
- Orifice sizes from 0.080 to 0.250 in.(2.0 to 6.4 mm).
- Flow coefficients (Cv) from 0.11 to 0.70.
- Straight, angle flow patterns.
- **SUPERLOK** tube fitting, male and female NPT, and Combination of end connections.
- Each and every valve is tested at the factory.

Technical Data

Series	Orifice in.(mm)	Pressure - Temperature Rating	
		Temperature ℉(℃)	Working Pressure psig (bar)
STV1	0.080(2.0)	-20 to 200℉ (-28 to 93℃)	300psig(20.6bar)
STV2	0.125(3.2)		
STV3	0.250(6.4)		200psig(13.7bar)

Materials of Construction

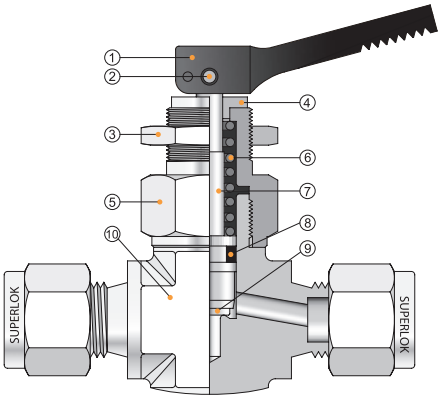

No.	Component	Material
1	Handle	Nylon
2	Roll Pin	Stainless Steel 304
3	Lock Nut	A276-316
4	Handle Washer	Nylon
5	Packing Nut	A276-316
6	Spring	Stainless Steel
7	Stem	A276-316
8	O-Ring	Viton
9	Stem Tip	PTFE
10	Body	A182-F316

ordering information

Example : **STV2 - M 4N - N - B**

1 2 3 4 5

1. Valve Type

Straight Type

- STV1 : Orifice 2mm
- STV2 : Orifice 3.2mm
- STV3 : Orifice 6.4mm

Angle Type

- STV1A : Orifice 2mm
- STV2A : Orifice 3.2mm
- STV3A : Orifice 6.4mm

2. Port Type

- S : SUPERLOK Tube Fitting
- M : Male Pipe Thread
- F : Female Pipe Thread

4. O-Ring Material

- Blank : Viton
- N : NBR
- K : Kalez

3. Port Size

Pipe Thread Designation

Size (inch)	1/8	1/4
ISO Tapered	2R	4R
NPT	2N	4N

Tube O.D Designation

Tube O.D (inch)	1/8	1/4	3/8	1/2
Designation	2	4	6	8
Tube O.D (mm)	3	6	10	12
Designation	3M	6M	10M	12M

5. Body Material

- Blank : 316 Stainless Steel
- B : Brass

STRAIGHT TYPE

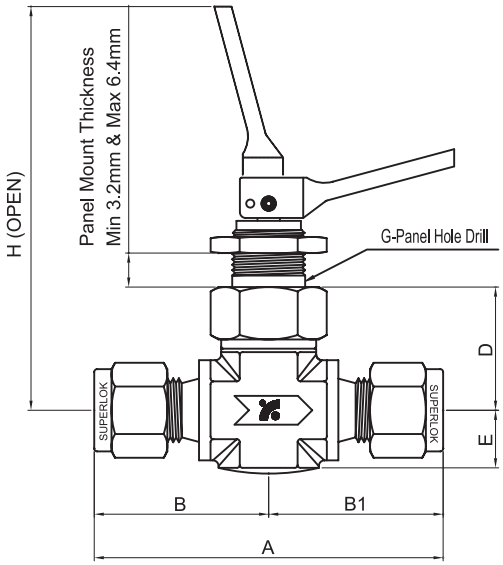

ANGLE TYPE

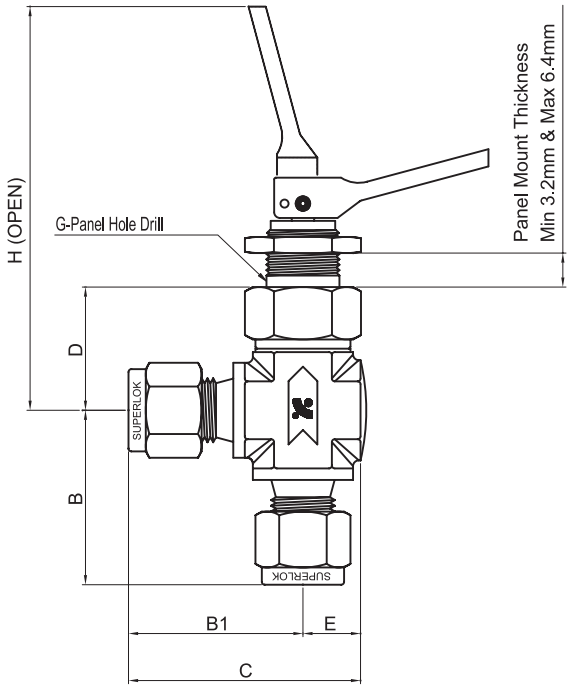

Table of Dimensions

Part Number		Orifice	Cv	End Connections		Dimensions							
				Inlet	Outlet	A	B	B1	C	D	E	G	H
STV1	M2N	2.0	0.11	1/8″ Male NPT		38.1	19.0	19.0	27.0	23.4	7.9	13.5	72.9
	M2N-S2			1/8″ Male NPT	1/8″ Superlok	43.9	19.0	24.9	32.8				
	S2			1/8″ Superlok		49.8	24.9	24.9	32.8				
	S3M			3mm Superlok		49.8	24.9	24.9	32.8				
STV2	F2N	3.2	0.2	1/8″ Female NPT		41.4	20.6	20.6	30.2	21.8	9.5	13.5	71.4
	M2N			1/8″ Male NPT		43.7	21.8	21.8	31.2				
	M4N			1/4″ Male NPT		49.8	24.9	24.9	34.5				
	M4N-S4			1/4″ Male NPT	1/4″Superlok	53.6	24.9	28.7	38.1				
	M2N-F2N			1/8″ Male NPT	1/8″ Female NPT	41.4	20.6	20.6	30.2				
	S4			1/4″ Superlok		57.4	28.7	28.7	38.1				
	S6M			6mm Superlok		57.4	28.7	28.7	38.1				
	S8M			8mm Superlok		56.4	28.2	28.2	37.6				
STV3	F4N	6.4	0.7	1/4″ Female NPT		53.8	26.9	26.9	39.6	26.9	12.7	16.8	90.4
	M6N			3/8″ Male NPT		57.2	28.4	28.4	41.1				
	S6			3/8″ Superlok		65.5	32.8	32.8	45.5				
	S8			1/2″ Superlok		71.7	35.6	35.6	48.9				
	S10M			10mm Superlok		69.1	34.5	34.5	47.2				
	S12M			12mm Superlok		74.2	37.1	37.1	49.8				

- All dimensions in millimeters unless specified as “inch”. Dimension are for reference only, subject to change.
- Dimension, shown on the above table, are measured with SUPEROLK nut in the finger-tight where applicable .
- ISO Tapered Threads are available upon request.

Relief Valves

Features

- Compact design
- Cracking pressure adjustable externally
- Lock wire feature secures a given pressure setting
- Each and every valve is tested at the factory

Set Pressure

- Set pressure is the upstream pressure at which the first indication of flow occurs.
  Set pressure of each valve after initial relief is repeatable within ±5% at room temperature.

SRVL Series

Low Pressure Relief Valve

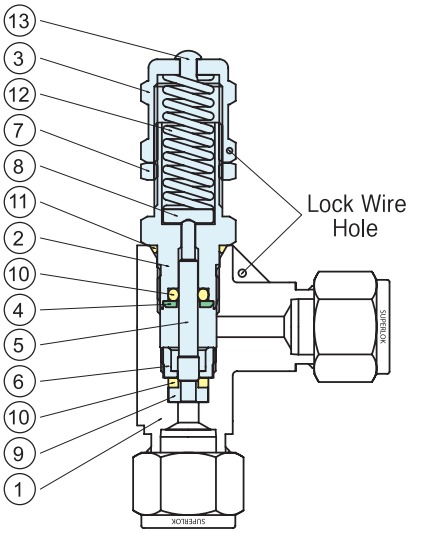

Technical Data

- Maximum working pressure : 300 psig (20.6 bar)
- Cracking pressure range : 10~250 psig (0.69~17.2 bar)
- Orifice size : 4.8mm
- One spring for the full set pressure range
- If required spring kit, mention part no : SRVL-KIT

Materials of Construction

No.	Description	Material	No.	Description	Material
1	Body	SS316 / A182	9	Seat Retainer	SS316 / A276
2	Bonnet	SS316 / A276	10	Seat	PTFE
3	Cracking Pressure Adjusting Nut	SS316 / A276	11	O-Ring	Viton
4	Retainer	SS316 / A276	12	O-Ring	Viton
5	Stem Shaft	SS316 / A276	13	O-Ring	Viton
6	Stem	SS316 / A276	14	Spring	SS631
7	Lock Nut	SS316 / A276	15	Cap	Polypropylene
8	Spring Support	SS316 / A276			

SRVH Series

High Pressure Relief Valve

Technical Data

- Maximum working Pressure : 6000 psig (413 bar)
- Cracking Pressure Range : 225~6000 psig (15.5~414 bar)
- Orifice size : 4.8mm
- Multiple springs for a selection of set pressure ranges

SRVH Series Spring

Spring Designator	Spring Color	Cracking Pressure		
		psig	bar	kPa
YE	Yellow	225~750	15.5~51.5	1550~5150
PP	Purple	750~1500	51.5~103	5150~10300
OE	Orange	1500~2250	103~155	10300~15500
BN	Brown	2250~3000	155~206	15500~20600
WH	White	3000~4000	206~275	20600~27500
RD	Red	4000~5000	275~344	27500~34400
GN	Green	5000~6000	344~414	34400~41400

※ If required spring kit, mention part no : SRVH-KIT-, ex)SRVH-KIT-YE

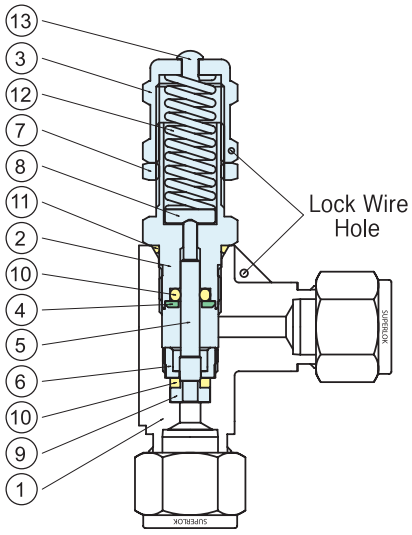

Materials of Construction

No.	Description	Material	No.	Description	Material
1	Body	SS316 / A182	8	Spring Support	SS316 / A276
2	Bonnet	SS316 / A276	9	Stem Retainer	SS316 / A276
3	Cracking Pressure Adjusting Nut	SS316 / A276	10	O-Ring	Viton
4	Retainer	SS316 / A276	11	O-Ring	Viton
5	Stem Shaft	SS316 / A276	12	Spring	SS631
6	Stem Guide	SS316 / A276	13	Cap	Polypropylene
7	Lock Nut	SS316 / A276			

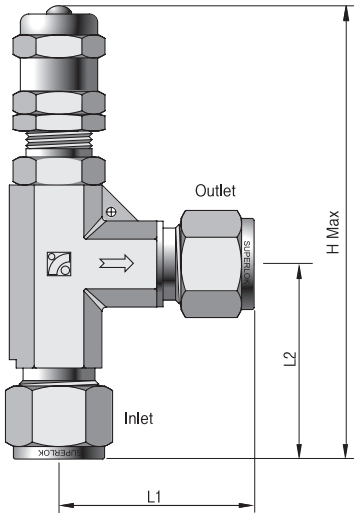

Table of Dimensions

Part Number		Orifice	End Connection		Dimensions		
			Inlet	Outlet	L1	L2	H
SRVL or SRVH	S4	4.8	1/4″ SUPERLOK		38.7	37.3	104.6
	S6M		6mm SUPERLOK		38.7	37.3	104.6
	S8M		8mm SUPERLOK		38.7	37.3	104.6
	S6		3/8″ SUPERLOK		44.4	44.4	111.7
	S8		1/2″ SUPERLOK		46.7	46.7	114.0
	S12M		12mm SUPERLOK		46.7	46.7	114.0
	M8N-S8		1/2″ Male NPT	1/2″ SUPERLOK	46.7	35.7	103.0
	M8N-S12M		1/2″ Male NPT	12mm SUPERLOK	46.7	35.7	103.0
	M4N-F4N		1/4″ Male NPT	1/4″ Female NPT	30.0	32.2	99.5
	M6N-F6N		3/8″ Male NPT	3/8″ Female NPT	34.5	32.2	99.5
	M8N-F8N		1/2″ Male NPT	1/2″ Female NPT	38.0	35.7	103.0

• Dimensions shown with SUPERLOK tube fitting nuts finger-tight.
• All dimensions in millimeters unless specified as “inch”. Dimension are for reference only, subject to change.

Ordering information

Example :

SRVH	-	S	8	-	YE	-	SS
1		2	3		4		5

1. Valve Series

SRVL : Low Pressure
SRVH : High Pressure

2. End Connection

S : Tube Fitting
M : Male Pipe Thread
F : Female Pipe Thread

3. Inlet and Outlet Connection Size & Type

Fractional	Connection Size	1/4″	3/8″	1/2″
	Designator	4	6	8

Metric	Connection Size	6mm	8mm	12mm
	Designator	6M	8M	12M

Thread	NPT	ISO TAPERED
Designator	N	R

4. Spring Designator

YE : 225 ~ 750 psig
PP : 750 ~ 1500 psig
OE : 1500 ~ 2250 psig
BN : 2250 ~ 3000 psig
WH : 3000 ~ 4000 psig
RD : 4000 ~ 5000 psig
GN : 5000 ~ 6000 psig

5. Body Material

SS : ASTM A182 F316 (Stainless steel)

Bleed Valves

Applications

SUPERLOK bleed valves can be used on instrumentation devices such as multivalve manifolds or gauge valves to vent signal line pressure to atmosphere Before removal of an instrument or to assist in calibration of control devices.

Features

- Compact for convenient installation.
- Back stop screw prevents accidental remove of stem.
- Chrome-plated stem threads and tip improves valve life.
- Male NPT or ISO Thread end connection.

Caution

When installing a **SUPERLOK** bleed valve, position the vent tube to direct system fluid away from operating personnel. Alway open bleed valves slowly. These valves contain no packing, so some fluid weepage will occur when the valves are opened. operating personnel must protect themselves from exposure to system fluids.

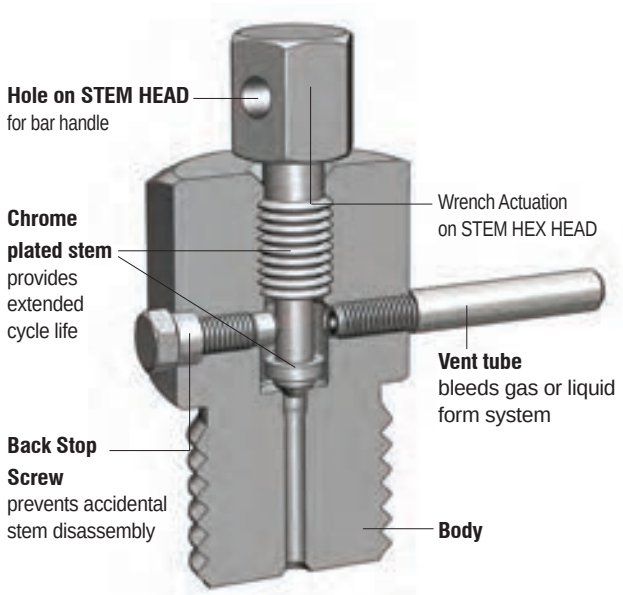

Materials of Construction

Component	Valve Body Materials Material Grade/ASTM Specification
Stem	316 SS / A276
Body	316 SS / A276
Back stop screw	316 SS / A276
Vent tube	316 SS / A269

Pressure - temperature ratings

Material Temperature ℉(℃)	316 SS Working Pressure, psig (bar)
-65(-53) to 100(37)	10,000(689)
200(93)	9,290(640)
300(148)	8,390(578)
400(204)	7,705(530)
450(232)	7,435(512)
500(260)	7,165(493)
600(315)	6,770(466)
650(343)	6,660(458)
700(371)	6,840(446)
750(398)	6,335(436)
800(426)	6,230(429)
850(454)	6,085(419)

Technical Data

Series	Orifice in.(mm)	Pressure-Temperature Rating	
		Temperature ℉(℃)	Working Pressure psig (bar)
SBLV	0.125 (3.2)	-65 to 850℉ (-54 to 454℃)	10,000psig (689bar) @100℉ (38℃)

Table of Dimension

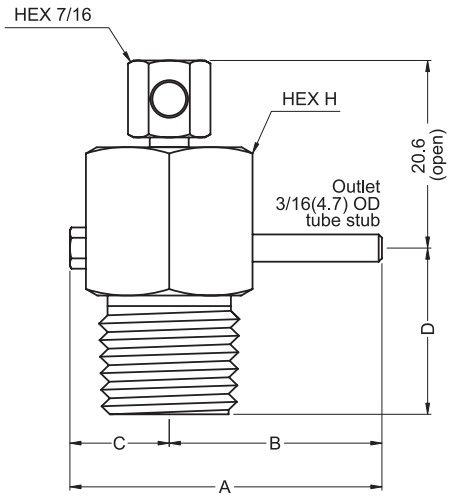

Part Number	End Connection		Cv	Dimensions inch(mm)				
	Inlet	Outlet		A	B	C	D	H
SBLV-M2N	1/8″ Male NPT	O.D. 3/16″ tube stub	0.25	1.34 (34.0)	0.92 (23.4)	0.41 (10.4)	0.75 (19.1)	0.625 (15.87)
SBLV-M4N	1/4″ Male NPT							
SBLV-M6N	3/8″ Male NPT			1.47 (37.3)	1.03 (26.1)	0.44 (11.2)	0.88 (22.3)	0.875 (22.22)
SBLV-M8N	1/2″ Male NPT							
SBLV-M12N	3/4″ Male NPT			1.87 (47.6)	1.15 (29.3)	0.72 (18.3)	1 (25.4)	1.125 (28.57)

• All dimensions in millimeters unless specified as “inch”. Dimension are for reference only, subject to change.

Testing

- Each valve is tested with nitrogen@1000psig(69bar)to max leak rate of 0.1 SCCM.
- Hydrostatic shell test is performed at 1.5times the working pressure as an option.

Option

If require 316SS bar handle, add-BH to the end of part number.
ex) SBLV-M4N-BH

Purge Valves

Applications

SUPERLOK purge valves are manual bleed, vent, or drain valves. One-quarter turn with a wrench from finger-tight obtains leaktight closure on first makeup. Snugging with a wrench ensures closure to the rated pressure with subsequent makeups.

Features

- Compact for convenient installation.
- Vent hole is bled excessive liquid or gas from system lines.
- Cap is crimped to valve body to prevent accidental disassembly.
- Variety of end connections; **SUPERLOK** tube fittings, NPT and ISO threads.

Caution

When installing a **SUPERLOK** purge valve, position the vent hole to direct system fluid away from operating personnel. The vent hole rotates with the cap. changing the direction of discharge as the cap is turned. Alway open purge valves slowly.These valves contain no packing, so some fluid weepage will occur when the valves are opened. operating personnel must protect themselves from exposure to system fluids.

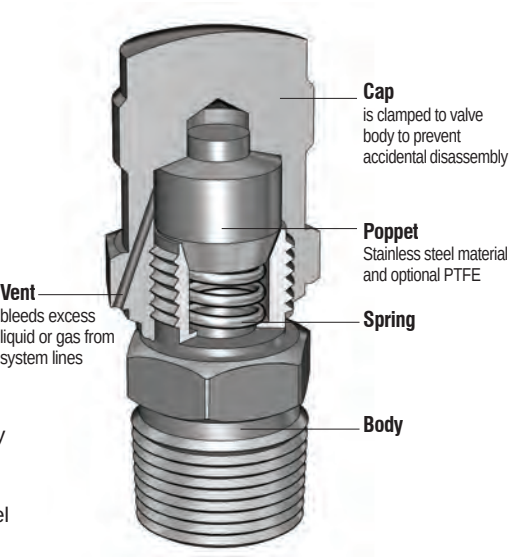

Materials of Construction

Component	Valve Body Materials Material Grade/ASTM Specification
Cap	316 SS / A276
Body	316 SS / A276
Poppet	316 SS / A276
Spring	304 SS

Technical Data

Series	Pressure - Temperature Rating	
	Temperature ℉( )	Working Pressure psig (bar)
SPUV	-65 to 600℉ (-54 to 315℃)	4,000psig (275bar) @100℉ (38℃)

Pressure - temperature ratings

Material	316 SS
Temperature ℉(℃)	Working Pressure, psig (bar)
-65(-53) to 100(37)	4,000(275)
150(65)	3,720(256)
200(93)	3,440(237)
300(148)	3,105(213)
350(176)	2,975(204)
400(204)	2,850(196)
450(232)	2,750(189)
500(260)	2,650(182)
600(315)	2,500(172)

Table of Dimension

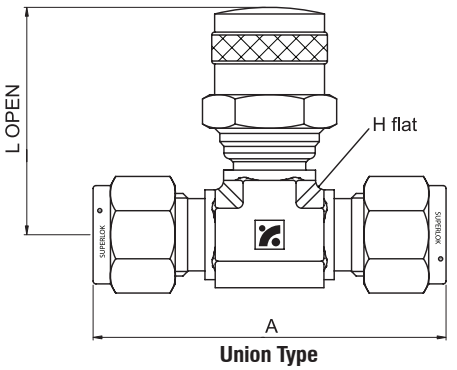

Union Type

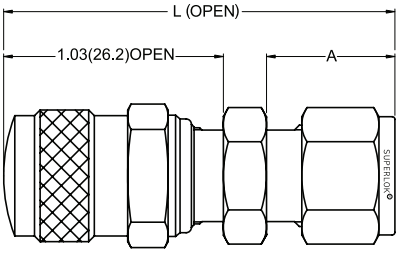

Straight Type

Union Type

Part Number		Inlet End Connection	Dimensions in.(mm)		
			L	A	H
SPUV	S4-UT	1/4″ SUPERLOK	1.49(38.0)	2.26(57.5)	0.63(15.9)
	S6-UT	3/8″ SUPERLOK	1.49(38.0)	2.40(61.0)	0.63(15.9)
	S8-UT	1/2″ SUPERLOK	1.61(41.0)	2.82(71.6)	0.81(20.6)

Straight Type

Part Number		Inlet End Connection	Dimensions in.(mm)	
			L	H
SPUV	F2N	1/8″ Female NPT	1.56 (39.6)	0.53 (13.5)
	F4N	1/4″ Female NPT	1.75 (44.4)	0.72 (18.3)
	F6N	3/8″ Female NPT	1.81 (46.0)	0.78 (19.8)
	F8N	1/2″ Female NPT	1.98 (50.3)	0.97 (24.6)
	M2N	1/8″ Male NPT	1.62 (41.1)	0.38 (9.7)
	M4N	1/4″ Male NPT	1.81 (46.0)	0.56 (14.2)
	M6N	3/8″ Male NPT	1.84 (46.7)	0.56 (14.2)
	M8N	1/2″ Male NPT	2.09 (53.1)	0.75 (19.1)
	S2	1/8″ SUPERLOK	1.84 (46.7)	0.59 (15.0)
	S4	1/4″ SUPERLOK	1.94 (49.3)	0.69 (17.5)
	S6	3/8″ SUPERLOK	2.03 (51.6)	0.75 (19.1)
	S8	1/2″ SUPERLOK	2.19 (55.6)	0.88 (22.4)
	S6M	6mm SUPERLOK	1.94 (49.3)	0.69 (17.5)
	S8M	8mm SUPERLOK	2.00 (50.8)	0.72 (18.3)

Dimensions are for reference only, subject to change.

Table of Dimension

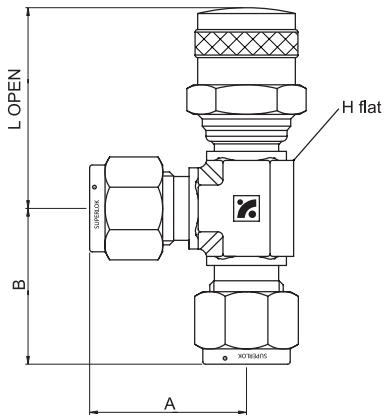

Elbow Type

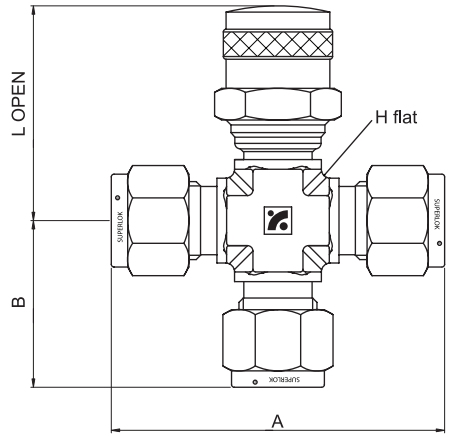

Tee Type

Part Number		Inlet End Connection	Dimensions in.(mm)			
			L	A	B	H
SPUV	S4-ET	1/4″ SUPERLOK	1.49 (38.0)	1.13 (28.8)	1.13 (28.8)	0.63 (15.9)
	S6-ET	3/8″ SUPERLOK	1.49 (38.0)	1.20 (30.5)	1.20 (30.5)	0.63 (15.9)
	S8-ET	1/2″ SUPERLOK	1.61 (41.0)	1.41 (35.8)	1.41 (35.8)	0.81 (20.6)

Part Number		Inlet End Connection	Dimensions in.(mm)			
			L	A	B	H
SPUV	S4-TT	1/4″ SUPERLOK	1.49 (38.0)	2.26 (57.5)	1.13 (28.8)	0.63 (15.9)
	S6-TT	3/8″ SUPERLOK	1.49 (38.0)	2.40 (61.0)	1.20 (30.5)	0.63 (15.9)
	S8-TT	1/2″ SUPERLOK	1.61 (41.0)	2.82 (71.6)	1.41 (35.8)	0.81 (20.6)

• All dimensions in millimeters unless specified as “inch”. Dimension are for reference only, subject to change.

ordering information

Example : **SPUV - S 4 - UT - SS**

1 2 3 4 5

1. Valve Series
SPUV

2. End Connection
S : SUPERLOK Tube Fittiing
F : Female Thread
M : Male Thread

3. End Connection Size

Tube O.D Designation

Tube O.D (inch)	1/4	3/8	1/2
Designation	4	6	8
Tube O.D (mm)	6	10	12
Designation	6M	10M	12M

Pipe Thread Designation

Size (inch)	1/8	1/4	3/8	1/2
BSPT	2R	4R	6R	8R
NPT	2N	4N	6N	8N

4. Pattern Designator
Nil : Straight Type
UT : Union Type
ET : Elbow Type
TT : Tee Type

5. Body Material
SS : 316 Stainless Steel
B : Brass

Other Valve Series

SUPERLOK®

Filters & Others

Micron Inline Filters | Micron Tee Filters
Quick Connectors | Flexible Metal Hoses

www.superlok.com

Micron Inline Filters

SIF Series

Features

- Remove system particulate contaminants.
- Inline filters are for use where space is limited.
- Replaceable filter element.
- Maximum operating pressure : 3000 psi @ 70℉ (21℃)
- Operating temperature range : -20℉ to 900℉ (-28℃ to 482℃) with SS316 body
- 1/8 to 1/2 in. and 3 to 10mm end connections.

Technical Data

Temperature and Pressure Rating

Filter Series	SIF1 & SIF2	SIF3 & SIF4
Material	SS 316	
Temperature ℉(℃)	Working pressure psig(bar)	
-20(-28) to 100(37)	3000(206)	2500(172)
200(93)	2580(177)	2150(148)
300(148)	2330(160)	1940(133)
400(204)	2140(147)	1780(122)
500(260)	1990(137)	1660(114)
600(315)	1880(129)	1560(107)
650(343)	1845(127)	1540(106)
700(371)	1800(124)	1500(103)
750(398)	1760(121)	1460(100)
800(426)	1725(118)	1440(99.2)
850(454)	1690(116)	1410(97.1)
900(482)	1640(112)	1360(93.7)

Effective Filtration Area

Filter Series	Effective Filtration Area in^2 (mm^2)
	Sintered
SIF1	0.55(350)
SIF2	1.3(830)
SIF3 & SIF4	2.0(1280)

Filter Elements

Nominal Pore Size ㎛	Pore Size Range ㎛
0.5	0.5 to 2
2	1 to 4
7	5 to 10
15	11 to 25
60	50 to 75
90	75 to 100

Materials of Construction

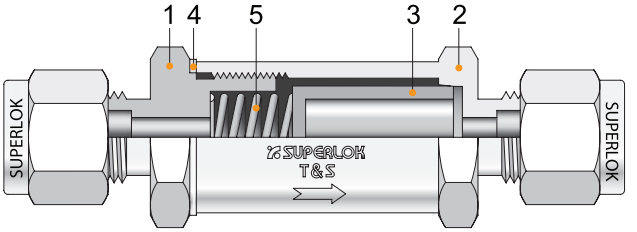

No.	Description	Material
1	Inlet Body	A276-316
2	Outlet Body	A276-316
3	Filter Elements	SS316 - Sintered
4	Gasket	Silver Plate SS316
5	Spring	SS304

Flow Data at 70℉ (20℃)

Nominal Element Pore Size ㎛	Inlet Pressure psig(bar)									Pressure Dorp psig (bar)								
	5 (0.34)			10 (0.68)			15 (1.0)			10 (0.68)			50 (3.4)			100 (6.8)		
	SIF1	SIF2	SIF3,4	SIF1	SIF2	SIF3,4	SIF1	SIF2	SIF3,4	SIF1	SIF2	SIF3,4	SIF1	SIF2	SIF3,4	SIF1	SIF2	SIF3,4
	Air Flow, L /min									Water Flow, L /min								
0.5	1.1	3.4	10	1.7	7.3	24	3.4	13	4.5	0.03	0.15	0.34	0.15	0.64	1.5	0.45	1.0	2.8
2	5.6	17	39	11	39	79	17	65	110	0.30	0.90	0.98	0.91	3.2	4.1	1.5	4.9	6.0
7	14	39	51	25	82	119	34	130	190	0.37	1.50	2.40	1.10	4.9	8.3	1.8	7.5	13
15	22	34	51	36	82	130	42	130	220	0.45	1.80	3.10	1.30	4.9	9.8	2.1	7.9	15
60	48	87	140	62	160	280	68	240	420	0.56	3.40	7.50	1.80	12	25	2.6	17	37
90	51	110	170	62	210	310	73	280	450	0.75	4.50	8.70	1.80	15	28	2.2	23	41

Table of Dimensions

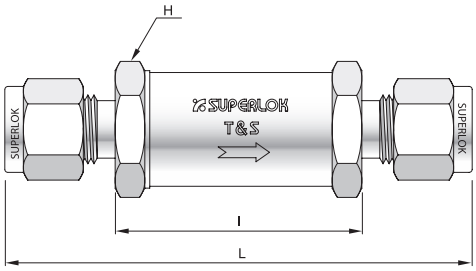

Part Number		Orifice	End Connection	Dimension		
			Inlet / Outlet	H	I	L
SIF1	M2N	2.4	1/8″ Male NPT	14.3	29.2	48.6
	F2N		1/8″ Female NPT			54.9
	S2		1/8″ SUPERLOK			59.7
	S3M		3mm SUPERLOK			60.5
SIF2	M4N	4.8	1/4″ Male NPT	19.0	39.7	68.3
	F4N		1/4″ Female NPT			72.9
	S4		1/4″ SUPERLOK			75.2
	S6M		6mm SUPERLOK			75.2
SIF3	M6N	7.1	3/8″ Male NPT	25.4	43.2	71.6
	F6N		3/8″ Female NPT			77.2
	S6		3/8″ SUPERLOK			81.8
SIF4	S8	10.4	1/2″ SUPERLOK			86.9
	S12M		12mm SUPERLOK			82.2

• All dimensions in millimeters unless specified as “inch”. Dimension are for reference only, subject to change.
• Dimension shown SUPERLOK nuts measure in the finger-tight, where applicable.

Ordering Information

Example : **SIF2 - M 4N - 7 - B**

1 2 3 4 5

1. Valve Series

SIF1:Orifice 2.4mm SIF2:Orifice 4.8mm
SIF3:Orifice 7.1mm SIF4:Orifice 10.4mm

2. Port Type

S: SUPERLOK Tube Fitting
M: Male Pipe Thread
F: Female Pipe Thread

3. Port Size

Pipe Thread Designation

Size (inch)	1/8	1/4	3/8
ISO Tapered	2R	4R	6R
NPT	2N	4N	6N

Tube O.D Designation

Tube O.D (inch)	1/8	1/4	3/8	1/2
Designation	2	4	6	8
Tube O.D (mm)	3	6	10	-
Designation	3M	6M	10M	-

4. Filter Element - Pore Size

05 : 0.5 Micron 2 : 2 Micron
7 : 7 Micron 15 : 15 Micron
60 : 60 Micron 90 : 90 Micron

5. Body Material

- Blank : 316 Stainless Steel
- B: Brass

Micron Tee Filters

STF Series

Features

- Remove system particulate contaminants
- The filter element can be replaced without removing the body in the system
- Replaceable sintered filter element
- Maximum operating pressure: 6000 psi (414bar) @ 70°F (21 °C)
- Operating temperature range: - 40°F to 250°F (- 40°C to 121°C)

Technical Data

Temperature and Pressure Rating

Filter Series	STF1 & STF2	
Material	SS 316	Brass
Temperature °F (°C)	Working pressure psig (bar)	
-20(-28) to 100(37)	6000(413)	2000(137)
200(93)	5160(355)	1730(119)
300(148)	4660(321)	1470(101)
400(204)	4280(294)	-
500(260)	3980(274)	-
600(315)	3760(259)	-
650(343)	3700(254)	-
700(371)	2600(248)	-
750(398)	3520(242)	-
800(426)	3460(238)	-
850(454)	3380(232)	-
900(482)	3280(225)	-

Effective Filtration Area

Filter Series	Sintered Element in² (mm²)
STF1	1.3(830)
STF2	2.0(1280)

Filter Elements

Nominal Pore Size μm	Pore Size Range μm
0.5	0.5 to 2
2	1 to 4
7	5 to 10
15	11 to 25
60	50 to 75
90	75 to 100

Materials of Construction

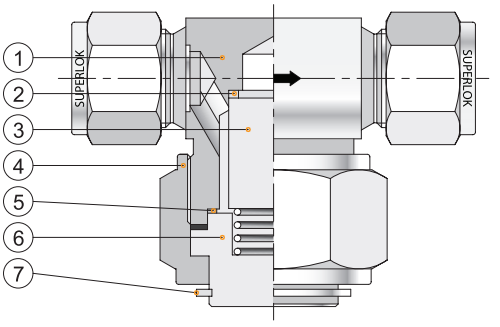

No.	Description	Material
1	BODY	A276-316
2	PACKING	PTFE
3	FILTER ELEMENTS	SS316 / Sintered
4	NUT	A276-316
5	GASKET	SS316 / Silver Plated
6	CAP	A276-316
7	SNAP RING	STAINLESS STEEL

Flow Data at 70°F (20°C)

Nominal Element Pore Size μm	Inlet Pressure, psig (bar)						Pressure Drop, psig (bar)					
	5 (0.34)		10 (0.68)		15 (1.0)		10 (0.68)		50 (3.4)		100 (6.8)	
	TF1	TF2	TF1	TF2	TF1	TF2	TF1	TF2	TF1	TF2	TF1	TF2
	Air Flow, L/min						Water Flow, L/min					
0.5	3.4	10	7.3	24	13	45	0.15	0.34	0.64	1.5	1.0	2.8
2	17	39	39	79	65	110	0.9	0.98	3.2	4.1	4.9	6.0
7	39	51	82	119	130	190	1.5	2.4	4.9	8.3	7.5	13
15	34	51	82	130	130	220	1.8	3.1	4.9	9.8	7.9	15
60	87	140	160	280	240	420	3.0	5.6	10	18	14	25
90	110	170	210	310	280	450	4.1	6.4	12	20	18	28

Table of Dimensions

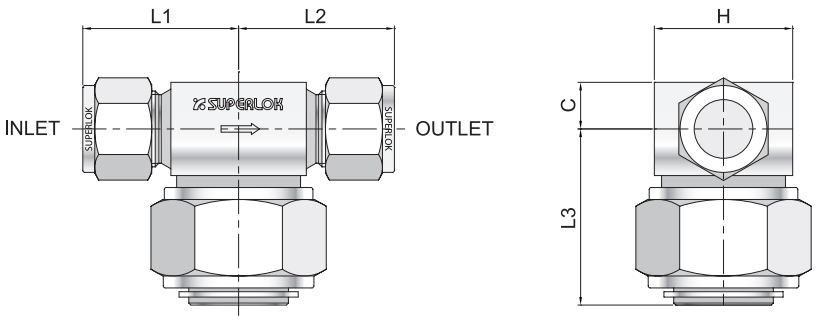

Part Number		Orifice	End Connection	Dimension				
			Inlet / Outlet	L1	L2	L3	C	H
STF1	M4N	4.4	1/4" Male NPT	27.7	27.7	43.4	9.7	27.0
	F2N		1/8" Female NPT	25.9	25.9			
	S4		1/4" SUPERLOK	31.3	31.3			
	S6M		6mm SUPERLOK	31.2	31.2			
STF2	M6N	6.4	3/8" Male NPT	31.2	31.2	44.2	11.7	34.0
	M8N		1/2" Male NPT	36.1	36.1			
	S6		3/8" SUPERLOK	36.3	36.3			
	S8		1/2" SUPERLOK	39.1	39.1			

- All dimensions in millimeters unless specified as "inch". Dimension are for reference only, subject to change
- Dimension shown with SUPERLOK nuts measure in the finger-tight, where applicable.

Ordering Information

Example : **STF1 - M 4N - 7 - B**

1 2 3 4 5

1. Valve Series

STF1: Orifice 4.4mm
STF2: Orifice 6.4mm

2. Port Type

S: SUPERLOK Tube Fitting
M: Male Pipe Thread
F: Female Pipe Thread

3. Port Size

Pipe Thread Designation

Size (inch)	1/4	3/8	1/2
ISO Tapered	4R	6R	8R
NPT	4N	6N	8N

Tube O.D Designation

Tube O.D (inch)	1/4	3/8	1/2
Designation	4	6	8
Tube O.D (inch)	6	8	12
Designation	6M	8M	12M

4. Filter Element - Pore Size

05 : 0.5 Micron
2 : 2 Micron
7 : 7 Micron
15 : 15 Micron
60 : 60 Micron
90 : 90 Micron

5. Body Material

Blank : 316 Stainless Steel
B : Brass

Instrumentation Quick - Connects

SQC SERIES

Features

- Simple push-pull action to connect and disconnect lines-no tools required.
- Plug and body are available valved or unvalved. valves automatically open when connected and shut off when disconnected to minimize the loss of liquids or gases.

Table of Dimensions

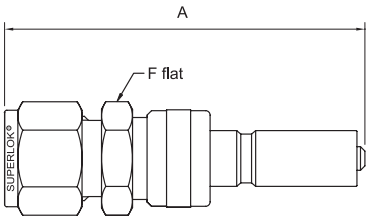

Plug

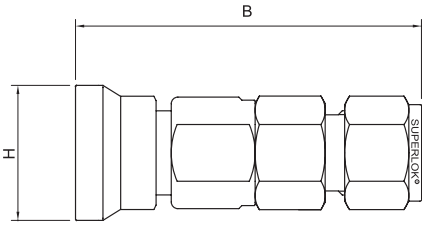

Body

Plug

Part Number			Cv		End Connection	A		F
			SO	DO	Type	SO	DO	
SQC1P -SO	SQC1P -DO	S2	0.08	0.08	1/8″ Superlok		70.4	15.9
		S4	0.4	0.2	1/4″ Superlok		61.5	
		S6M			6mm Superlok			
		M2N			1/8″ Male NPT		54.1	
		M4N(R)			1/4″ Male NPT(PT)		57.9	
		F2N			1/8″ Female NPT		52.6	
		F4N(R)			1/4″ Female NPT(PT)		58.9	19.1
SQC2P -SO	SQC2P -DO	S6	1.5	0.5	3/8″ Superlok		67.1	19.1
		S10M			10mm Superlok		70.4	
		M4N			1/4″ Male NPT		61.9	
		M6N(R)	1.6	0.5	3/8″ Male NPT(PT)		62.7	
		F4N	1.5	0.5	1/4″ Female NPT			
		F6N(R)	1.6	0.5	3/8″ Female NPT(PT)			22.2
SQC3P -SO	SQC3P -DO	S8	3.3	1.5	1/2″ Superlok		80.3	23.8
		S12M			12mm Superlok			
		M8N(R)	3.1	1.3	1/2″ Male NPT(PT)		77.2	
		F8N(R)			1/2″ Female NPT(PT)		76.7	27.0

- SO : Single shutoff type
- DO : Double shutoff type

Body

Part Number		End Connection Type	B	H
SQC1B	S2	1/8″ Superlok	57.4	23.1
	S4	1/4″ Superlok	58.4	
	S6M	6mm Superlok		
	M2N	1/8″ Male NPT	51.1	
	M4N(R)	1/4″ Male NPT(PT)	56.9	
	F2N	1/8″ Female NPT		
	F4N(R)	1/4″ Female NPT(PT)	61.5	
SQC2B	S6	3/8″ Superlok	65.5	26.2
	S10M	10mm Superlok	68.1	
	M4N	1/4″ Male NPT	60.5	
	M6N(R)	3/8″ Male NPT(PT)		
	F4N	1/4″ Female NPT	64.5	
	F6N(R)	3/8″ Female NPT(PT)	65.3	
SQC3B	S8	1/2″ Superlok	78.5	30.7
	S12M	12mm Superlok		
	M8N(R)	1/2″ Male NPT(PT)	75.4	
	F8N(R)	1/2″ Female NPT(PT)	81.8	

· All dimensions in millimeters unless specified as “inch”. Dimension are for reference only, subject to change

Materials of Construction

Component	Material
Body	SS316/A276
Housing	
Double shut off stem	
Double shut off stem retainer	
Body valve	
Body insert	
Single shut off stem retainer	
O-ring	Viton
Spring	SS304
Body sleeve	SS316/A276
Plug sleeve	
Locking Balls	

Pressure-Temperature Ratings

Temperature °F (℃)	316 SS with Fluorocarbon FKM O-ring		
	SQC 1	SQC 2	SQC 3
	Pressure Rating, coupled, psig (bar)		
70 (20)	3000 (206)	1500 (103)	750 (51.6)
400 (204)	250 (17.2)		

Maximum Flow Rate Water at 70°F(20℃)

Series	SQC 1	SQC 2	SQC 3
U.S gal/min	4	6	10
L/min	15	22	37

Insertion Depth

Series	Depth, in.(mm)	
	SO	DO
SQC 1	1.09(27.7)	1.15(29.2)
SQC 2	1.18(30.0)	1.30(33.0)
SQC 3	1.48(37.6)	1.68(42.7)

Overall Length

To calculate overall length in the coupled position, subtract the insertion depth from any overall plug and body combination lengt

Spillage

Spillage is the amount of system fluid that escapes when a quick-connect is uncoupled (double shut off only)

Series	SPILLAGE
SQC 1	0.3 cm^3
SQC 2	1.0 cm^3
SQC 3	3.0 cm^3

Option

BODY & PLUG PROTECTOR

Body & Plug Protectors guard against damage and contaminants when bodies and plug are uncoupled.

Series	Ordering Number	
	Body Protector	Plug Protector
SQC 1	SQC1 - BP	SQC1 - PP
SQC 2	SQC2 - BP	SQC2 - PP
SQC 3	SQC3 - BP	SQC3 - PP

Ordering Information

Example : SQC2P - S 6 - DO - SS

SQC2P	S	6	DO	SS
1	2	3	4	5

1. Body Series / Plug Series

Body Series	Plug Series
SQC1B	SQC1P
SQC2B	SQC2P
SQC3B	SQC3P

2. End Connection

S : SUPERLOK Tube Fittiing
F : Female Thread
M : Male Thread

3. End Connection Size

Tube O.D Designation

Tube O.D (inch)	1/4	3/8	1/2
Designation	4	6	8
Tube O.D (mm)	6	10	12
Designation	6M	10M	12M

Pipe Thread Designation

Size (inch)	1/8	1/4	3/8	1/2
Screwed BSPT	2R	4R	6R	8R
Screwed NPT	2N	4N	6N	8N

4. Plug Type

SO : Single Shutoff Type
DO : Double Shutoff Type

5. Body Material

SS : 316 Stainless Steel
B : Brass

Full Flow Quick - Connects

SFQC SERIES

Features

- Proven ball - lock mechanism provids positive connection.
- Simple push - pull action to connect and disconnect lines - no tools required.
- Compact coupling offers full without orifice restrictions.
- O-ring is easily replaced without disassembling body.

Table of Dimensions

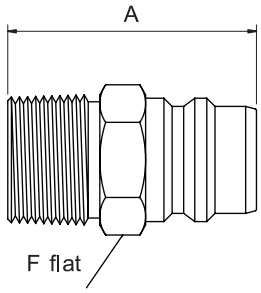

Plug

Part Number		End Connection Type	Cv	Min Orifice	A	F
SFQC2P	S4	1/4″ Superlok	2.2	4.8	45.0	14.3
	S6	3/8″ Superlok	2.8	6.1		17.5
	M4N(R)	1/4″ Male NPT	1.7		40.4	14.3
	M6N(R)	3/8″ Male NPT(PT)				17.5
	M4G	1/4″ Male PF			40.6	19.1
	F4N(R)	1/4″ Female NPT(PT)				
	F6N(R)	3/8″ Female NPT(PT)			42.4	22.2
	F4G	1/4″ Female PF			40.6	19.1
SFQC3P	S6	3/8″ Superlok	2.9	7.1	47.8	22.2
	S8	1/2″ Superlok	13.0	10.4	50.5	
	M6N(R)	3/8″ Male NPT(PT)	7.1	10.4	41.9	
	M8N(R)	1/2″ Male NPT(PT)	11.5	12.7	46.7	
	M8G	1/2″ Male PF	11.5		46.2	27.0
	F6N(R)	3/8″ Female NPT(PT)	7.1	11.9	40.4	
	F8N(R)	1/2″ Female NPT(PT)	11.5	12.7	46.2	
	F8G	1/2″ Female PF	11.5			
SFQC4P	S12	3/4″ Superlok	26.0	15.7	54.6	27.0
	M12N(R)	3/4″ Male NPT(PT)	23.6	18.3	51.6	
	F12N(R)	3/4″ Female NPT(PT)			52.8	33.3
SFQC5P	S16	1″ Superlok	45.0	22.4	62.2	34.9
	M16N(R)	1″ Male NPT(PT)	39.0		59.7	
	F16N(R)	1″ Female NPT(PT)			63.2	41.3

• All dimensions in millimeters unless specified as “inch”. Dimension are for reference only, subject to change

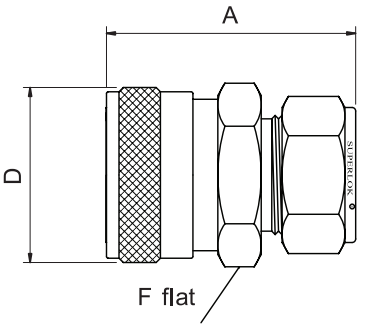

Body

Ordering Number		End Connection	Cv	A	D	F
Body Series		Type				
SFQC2B	S4	1/4″ Superlok	8	45.7	22.2	17.5
	S6	3/8″ Superlok	7.1	46.0		
	M4N(R)	1/4″ Male NPT	6.4	40.0		
	M6N(R)	3/8″ Male NPT(PT)	9.4			
	M4G	1/4″ Male PF	6.1	45.7		19.1
	F4N(R)	1/4″ Female NPT(PT)	9.7	38.1		
	F6N(R)	3/8″ Female NPT(PT)		41.4		22.2
	F4G	1/4″ Female PF		38.1		19.1
SFQC3B	S6	3/8″ Superlok	7.1	55.1	33.0	27.0
	S8	1/2″ Superlok	11.9	56.6		
	M6N(R)	3/8″ Male NPT(PT)	10.4	46.5		
	M8N(R)	1/2″ Male NPT(PT)	12.7	52.8		
	M8G	1/2″ Male PF	11.9			
	F6N(R)	3/8″ Female NPT(PT)	15.0	43.9		
	F8N(R)	1/2″ Female NPT(PT)	16.0			
	F8G	1/2″ Female PF				
SFQC4B	S12	3/4″ Superlok	15.7	62.2	42.6	38.1
	M12N(R)	3/4″ Male NPT(PT)	18.3	59.2		
	F12N(R)	3/4″ Female NPT(PT)	22.4	48.0		
SFQC5B	S16	1″ Superlok	22.4	70.0	49.0	44.5
	M16N(R)	1″ Male NPT(PT)		67.3		
	F16N(R)	1″ Female NPT(PT)	26.9	53.8		

• All dimensions in millimeters unless specified as “inch”. Dimension are for reference only, subject to change

Materials of Construction

Component	Material	
	316 SS	Brass
Body	SS316/A276	Brass / B16
Sleeve		
Locking ball		
Spring	SS304	
Sanp ring		
O - ring	Viton	NBR
Plug	SS316/A276	Brass / B16

Pressure-Temperature Ratings

Temperature °F (℃)	316 SS with Viton 0 - ring				Brass with NBR 0 - ring			
	SFQC 2	SFQC 3	SFQC 4	SFQC 5	SFQC 2	SFQC 3	SFQC 4	SFQC 5
	Pressure Rating, coupled, psig (bar)							
70 (20)	6000 (413)		4000 (275)		4000 (275)	3000 (206)	2000 (137)	
250 (121)					100 (6.8)			
400 (204)	100 (6.8)							

Insertion Depth

Series	Depth, in (mm)
SFQC2	0.78 (19.8)
SFQC3	0.81 (20.6)
SFQC4	0.90 (23.0)
SFQC5	0.94 (23.9)

Option

BODY & PLUG PROTECTOR

Body & Plug Protectors guard against damage and contaminants when bodies and plug are uncoupled.

Series	Ordering Number	
	Body Protector	Plug Protector
SFQC 2	SFQC2 - BP	SFQC2 - PP
SFQC 3	SFQC3 - BP	SFQC3 - PP
SFQC 4	SFQC4 - BP	SFQC4 - PP
SFQC 5	SFQC5 - BP	SFQC5 - PP

Ordering Information

Example :

SFQC4B	-	M	12N	-	SS
1		2	3		4

1. Body Series

SFQC2B
SFQC3B
SFQC4B
SFQC5B

Plug Series

SFQC2P
SFQC3P
SFQC4P
SFQC5P

2. End Connection

S : SUPERLOK Tube Fittiing
F : Female Thread
M : Male Thread

3. End Connection Size

Tube O.D Designation

Tube O.D (inch)	1/4	3/8	1/2	3/4	1
Designation	4	6	8	12	4
Tube O.D (mm)	6	10	12	20	25
Designation	6M	10M	12M	20M	25M

Pipe Thread Designation

Size (inch)	1/4	3/8	1/2	3/4	1
Screwed BSPT	4R	6R	8R	12R	16R
Screwed NPT	4N	6N	8N	12N	16N
Screwed BSPP	4G	6G	8G	12G	16G

4. Body Material

SS : 316 Stainless Steel
B : Brass

Flexible Metal Hoses

SFH Series

Features

- Stainless steel construction.
- Positive pressure up to 1600psig. (110bar)
- Wide variety of fractional and metric end connections from 1/4″ to 2″ and 6mm to 38mm.
- Custom options and assemblies available.

Technical Data

Nominal Hose Size in.	HOSE Series	Minimum Bend Radius in. (cm)		Temperature Range ℉(℃)	Working Pressure @-325 to 300℉ (-200 to 148℃) psig (bar)	Minimum Burst @70℉(20℃) psig (bar)
		Static	Dynamic			
1/4	SFH4	0.75 (1.90)	4.33 (11.0)	-325 to 800 (-200 to 426)	1600 (110)	6400 (440)
3/8	SFH6	0.87 (2.21)	5.91 (15.0)		1470 (101)	5880 (405)
1/2	SFH8	1.04 (2.64)	6.50 (16.5)		1110 (76.4)	4440 (305)
3/4	SFH12	1.61 (4.09)	8.86 (22.5)		860 (59.2)	3440 (237)
1	SFH16	1.89 (4.80)	10.2(26.0)		680 (46.8)	2720 (187)
1 1/4	SFH20	2.16 (5.49)	11.8 (30.0)		680 (46.8)	2720 (187)
1 1/2	SFH24	2.33 (5.92)	13.4 (34.0)		520 (35.8)	2080 (143)
2	SFH32	3.10 (7.87)	15.4 (39.1)		450 (31.0)	1800 (124)

• Do not subject Flexible metal hose to system pressure surges, shock or pulsations greater than 50% of the working pressure rating.

Ordering Information

Example : SFH4 - S4 - M4N - 1.5

1 2 3 2 3 4

1. Hose series and size

2. Port Type

S : SUPERLOK Tube Fittiing

M : Male Pipe Thread

F : Female Pipe Thread

3. Port Size

Pipe Thread Designation

Size(inch)	1/8	1/4	3/8	1/2	3/4	1
ISO Tapered	2R	4R	6R	8R	12R	16R
NPT	2N	4N	6N	8N	12N	16N

Tube O.D Designation

Fractional Tube	O.D(inch)	1/16	1/8	3/16	1/4	5/16	3/8	1/2	5/8	3/4	7/8	1	1-1/4	1-1/2	2
	Identify	1	2	3	4	5	6	8	10	12	15	16	20	24	32
Metric Tube	O.D(mm)	2	3	4	6	8	10	12	16	20	22	25	28	32	38
	Identify	2M	3M	4M	6M	8M	10M	12M	16M	20M	22M	25M	28M	32M	38M

4. Overall length in meters

Table of Dimensions

SUPERLOK Tube Fitting

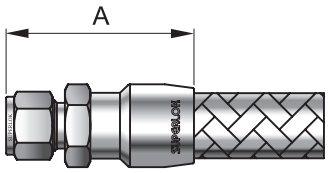

Part Number		Tube OD(inch)	Dimension A
SFH 4	S4	1/4	47.5
SFH 6	S6	3/8	50.8
SFH 8	S8	1/2	61.7
SFH 12	S12	3/4	66.5
SFH 16	S16	1	81.3
SFH 20	S20	1 1/4	96.3
SFH 24	S24	1 1/2	108.0
SFH 32	S32	2	133.0

• Metric connections are available upon request.

Tube Adapter

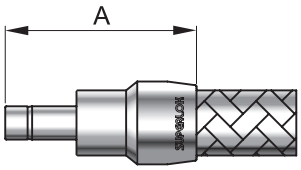

Part Number		Tube OD(inch)	Dimension A
SFH 4	4TA	1/4	38.6
SFH 6	6TA	3/8	46.0
SFH 8	8TA	1/2	54.9
SFH 12	12TA	3/4	63.5
SFH 16	16TA	1	75.9

• Metric connections are available upon request.

Male Pipe Threads, NPT

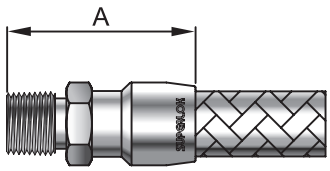

Part Number		Tube OD(inch)	Dimension A
SFH 4	M4N	1/4	43.2
SFH 6	M6N	3/8	48.5
SFH 8	M8N	1/2	58.9
SFH 12	M12N	3/4	62.3
SFH 16	M16N	1	77.5
SFH 20	M20N	1 1/4	79.8
SFH 24	M24N	1 1/2	85.9
SFH 32	M32N	2	92.2

• If required ISO tapered thread replace R in stead of N. (ex : SFH4-M4R)

Female Pipe Threads, NPT

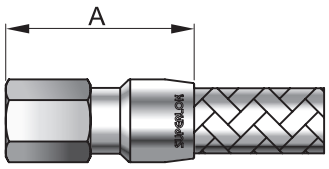

Part Number		Tube OD(inch)	Dimension A
SFH 4	F4N	1/4	46.0
SFH 6	F6N	3/8	46.7
SFH 8	F8N	1/2	62.2
SFH 12	F12N	3/4	61.2
SFH 16	F16N	1	74.2
SFH 24	F24N	1 1/2	83.3

• If required ISO tapered thread replace R in stead of N. (ex : SFH4-F4R)

· All dimensions in millimeters unless specified as “inch”. Dimension are for reference only, subject to change

Filters & Others

SUPERLOK®

Swaging Unit SMHS Series
Multihead Hydraulic

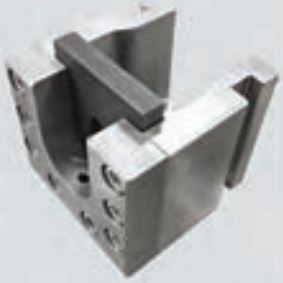

www.superlok.com

Swaging Unit SMHS Series

SMHS-A

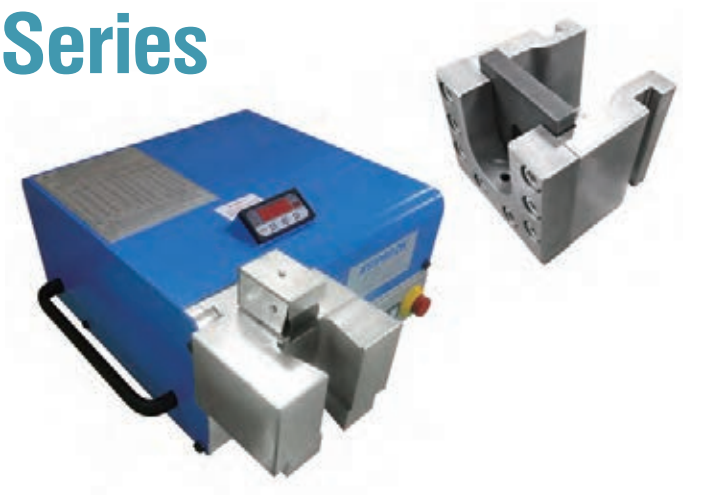

Flaring unit & Cutting ring assembly unit

Features I Equipment

- Compact and rugged table-top unit for mobile and flexible use.
- Very well suited for both, assembly of most cutting rings and flaring (37° SAE, 10°) of tubes with Ø6 - 42 mm
- Manual pressure adjustment with digital display.
- Short assembling times of only few seconds.
- Short set-up times when changing the tube diameter or the working method

Options

- Storage box for cutting ring assembly tooling. (assembling connections and counter-support plates)

Technical Data

Tube diameter range (OD)	6 - 42 mm
Hydraulics	3.7 L/min
Capacity of the hydraulic tank	3L
Maximum hydraulic pressure	200 bar
Feed rate of the piston	7.5 mm/s
Dimensions (WxHxD)	535 x 285 x 500 mm

SMHS-M

Operating Procedures

1. Set swaging pressure.
2. Install SUPERLOK Nut and Ferrule set.
3. Swage Ferrules onto tubing. While Holding the tubing against the piston shoulder, increase the hydraulic pressure by the hand pump up to the set pressure until hearing the bell ring.
4. Unthread the SUPERLOK nut and remove the preswaged assembly.
5. Install the preswaged assembly finger tight into a SUPERLOK body. While holding the body with a back-up wrench, tighten the nut 1/2 turn.

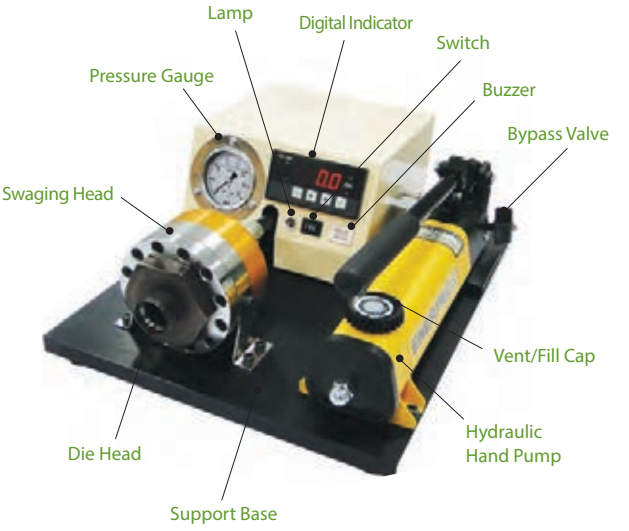

Features

1. Available the setting to adjust the pressure value according to the condition.
2. Activate the buzzer sound when complete to install in normal.
3. Assemble it to check the set pressure value by naked eye.
4. Available to use without electric power supply.

Pressure Setting & Recommended Minimum Wall Thickness of Tubing

Tube O.D (inch)	Stainless Steel	
	Tubing Wall inch (mm)	Set Pressure (bar)
3/4	0.065(1.65)	100
1	0.083 (2.11)	120
1-1/4	0.095 (2.41)	140
1-1/2	0.095 (2.41)	170
2	0.109 (2.77)	190

Multihead Hydraulic

Tube Benders

Operating Procedures

- New design for accurate and tight bends up to 180° in stainless steel and other tough metals.
- Patented, quick action trigger release repositions two-stage handle midway through a bend when both handle begin to meet. This feature allows easy fabrication of optimized bends up to 180° with reduce effort, better control and no crossing of handles.
- Rollers in bending hanble reduce friction and bending effort, eliminate scoring of tubing.
- Comfortable and durable ergonomically molded cushion grips.
- Vise lug for mounting in vise.
- Clamshell packaging available for 1/4“ and 3/8“ O.D models.

Features

1. Available the setting to adjust the pressure value according to the condition.
2. Activate the buzzer sound when complete to install in normal.
3. Assemble it to check the set pressure value by naked eye.
4. Available to use without electric power supply.

Technical Data

Series	Part No.		TUBE O.D	Raidius(to center of tube)	Weight (kg)
TUBETUBE BENDER	TB	4	1/4	9/16	0.54
	TB	6	3/8	15/16	1.68
	TB	8	1/2	1-1/2	3.45

For bending soft copper, aluminum, brass, steel, stainless steel and other tubing.

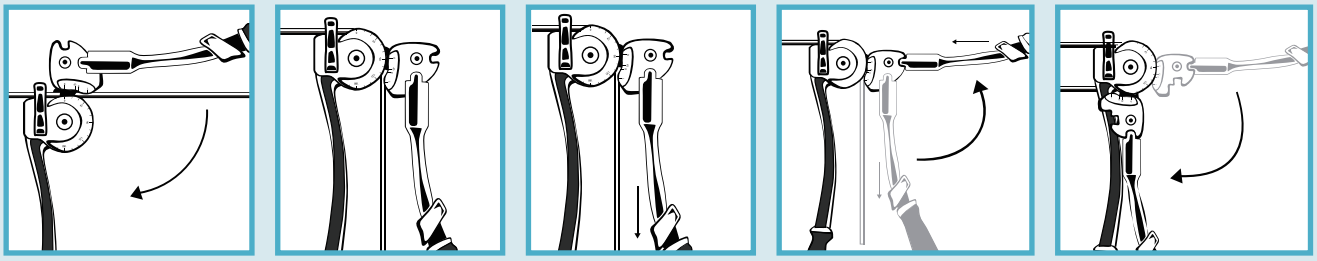

BEND TO 90°

PULL TRIGGER TO RELEASE HANDLE

RAISE HANDLE UP & RELEASE TRIGGER

LOWER HANDLE TO COMPLETE BEND

Swaging Unit SMHS Series & Multihead Hydraulic

Valve Series

- Key Operation Ball Valves
- Key Operation Needle Valves
- Ball Valves
- Integral Bonnet Needle Valves
- Union Bonnet Needle Valves
- Check Valves
- High Pressure Check Valves
- High Pressure Needle Valves
- Plug Valves
- Manifold Valves
- Vacuum Clamps
- Water Regulators
- Flexible Hoses
- Double Block & Bleed Valves
- Swing-Out Ball Valves
- Toggle Valves
- Bleed & Purge Valves
- Quick Connectors
- High Pressure Ball Valves
- Hydraulic Ball Valves
- Trunnion Ball Valves
- Rising Plug Valves
- Relief Valves
- Cryogenic Needle Valves
- Cryogenic Ball Valves
- Micron in-Line Filters
- Gauge Root Valves
- Hydraulic Flange and Components

Fitting Series

- Integration Tube Fittings
- Tube Fittings (Compression Type)
- Instrument Thread Fittings
- Forged Fittings
- Bite Type Tube Fittings (DIN2353)
- Bite Type Tube Fittings (JIS B2351)
- 37 Flared Tube Fittings (SAE J514)
- O-Ring Face Seal Fittings
- Hose Connectors & Push-On Hose Fittings

Electric Equipment

- MCPD(Molded Case Power Distributor)
- SPIDER
- Smart Eye Module

i-Lok (i-Fitting)

BMT Co., Ltd.

SKS